STATE OF MISSOURI

DEPARTMENT OF NATURAL RESOURCES

MISSOURI CLEAN WATER COMMISSION

CONSTRUCTION PERMIT

The Missouri Department of Natural Resources hereby issues a permit to:

City of Moberly
101 West Reed
Moberly, MO 65270

for the construction of (described facilities):

See attached.

Permit Conditions:

See attached.

Construction of such proposed facilities shall be in accordance with the provisions of the Missouri Clean Water Law, Chapter 644, RSMo., and regulation promulgated thereunder, or this permit may be revoked by the Department of Natural Resources.

As the department does not examine structural features of design or the efficiency of mechanical equipment, the issuance of this permit does not include approval of these features.

A representative of the department may inspect the work covered by this permit during construction. Issuance of a permit to operate by the department will be contingent on the work substantially adhering to the approved plans and specifications.

This permit applies only to the construction of water pollution control components; it does not apply to other environmentally regulated areas.

March 25, 2024
Effective Date

March 24, 2026
Expiration Date

John Hoke, Director, Water Protection Program

CONSTRUCTION PERMIT

I. CONSTRUCTION DESCRIPTION

Base Bid – Sparks Avenue Lift Station and Force Main:
This project consists of site preparation and grading, furnishing, and installation of a lift station (Sparks Avenue Lift Station) wet well manhole, concrete foundation, and duplex wastewater sewage lift station using two 7.5-horsepower (hp) pumps each capable of delivering 130 gallons per minute (gpm) at 32.5 feet Total Dynamic Head (TDH). Work includes furnishing and installing 1,300 feet of 4-inch Standard Dimension Ratio (SDR)-26 Polyvinyl Chloride (PVC) force main from the Sparks Avenue Lift Station to the receiving manhole utilizing an abandoned 12-inch cast iron water main as a casing pipe for the 4-inch SDR-26 PVC force main to cross the Norfolk Southern Railroad Right-of-Way. Work includes furnishing and installing 58 feet of 8-inch SDR-26 PVC gravity sanitary sewer from the Lift Station across Sparks Avenue and one (1) sanitary manhole. The project will also include general site work appropriate to the scope and purpose of the project, and associated appurtenances to make a complete lift station.

Alternate No. 1 – Sanitary Sewer Extension West to Robertson Road:
This project consists of extending an 8-inch gravity sewer in the public right-of-way (ROW) along the north side of Sparks Avenue west to Robertson Road. Work includes furnishing and installing 1,220 feet of 8-inch SDR-26 PVC sanitary sewer, four (4) sanitary manholes, 371 feet of 6-inch SDR-26 PVC service connection sewer, twelve (12) cleanouts, and associated appurtenances.

Alternate No. 2 – Sanitary Sewer Extension East to Schueneman Street:
This project consists of extending an 8-inch gravity sewer in the public ROW along the north side of Sparks Avenue to Schueneman Street. Work includes furnishing and installing 630 feet of 8-inch SDR-26 PVC sanitary sewer, three (3) sanitary manholes, 105 feet of 6-inch SDR-26 PVC service connection sewer, five (5) cleanouts, and associated appurtenances.

This project consists of site preparation and grading, furnishing, and installation of a lift station wet well manhole, concrete foundation, and duplex sewage suction lift station. Work includes furnishing and installing a 4-inch force main from the Sparks Avenue Lift Station to a receiving manhole. Work also includes utilizing an abandoned 12-inch cast iron water main as a casing pipe for the 4-inch force main to cross the Norfolk Southern Railroad right-of-way. Work includes furnishing and installing a gravity sanitary sewer from the lift station across Sparks Avenue.

These activities will be in the vicinity of the intersection of Sparks Avenue and Douglas Street in the City of Moberly, Randolph County, and discharge to an existing sewer system to be treated at the Moberly Wastewater Treatment Facility, Missouri State Operating Permit No. MO-0117960.

II. CONSTRUCTION PERMIT CONDITIONS

The permittee is authorized to construct, subject to the following conditions:

1. This construction permit does not authorize discharge.

2. All construction shall be in accordance with the plans and specifications submitted by Poepping, Stone, Bach & Associates and signed and sealed by Michael Purol, P.E., on May 23, 2023 and approved by the department on March 25, 2024.

3. Regulation 10 CSR 20-4.040(18)(B)1 requires that projects be publicly advertised, allowing sufficient time for bids to be prepared and submitted. Projects should be advertised at least 30 days prior to bid opening.

4. The department must be contacted in writing prior to making any changes to the approved plans and specifications that would directly or indirectly have an impact on the capacity, flow, system layout, or reliability of the proposed project or any design parameter that is addressed by 10 CSR 20-8, in accordance with 10 CSR 20-8.110(11).

5. As per 10 CSR 20-4.040, all changes in contract price or time within the approved scope of work must be by change order in accordance with Section 19 of this rule.

6. Manholes shall be located with the top access at or above grade level.

7. State and federal law does not permit bypassing of raw wastewater; therefore, steps must be taken to ensure that raw wastewater does not discharge during construction. If a sanitary sewer overflow or bypass occurs, report the appropriate information to the Department's electronic Sanitary Sewer Overflow/Bypass Reporting system at https://dnr.mo.gov/mogem/ or the Northeast Regional Office per 10 CSR 20-7.015(9)(G).

8. Protection of drinking water supplies shall be in accordance with 10 CSR 20-8.120(5), which includes by reference the provisions of 10 CSR 23-3.010. Separation distance requirements between water mains and sanitary sewers in 10 CSR 60-10.010 are also applicable.

9. In addition to the requirements for a construction permit, 10 CSR 20-6.200 requires land disturbance activities of 1 acre or more to obtain a Missouri State Operating Permit to discharge stormwater. The permit requires best management practices sufficient to control runoff and sedimentation to protect waters of the state. Land disturbance permits may only be obtained by means of the department's ePermitting system available online at https://dnr.mo.gov/data-e-services/missouri-gateway-environmental-management-mogem. See https://dnr.mo.gov/data-e-services/water/electronic-permitting-epermitting for more information.

10. A United States Army Corps of Engineers (USACE) Section 404 Department of Army permit (§404) along with the Department's Section 401 Water Quality Certification or waiver (§401) may be required for the activities described in this permit. This permit is not valid until these requirements are satisfied. If construction activity will disturb any land below the ordinary high water mark of jurisdictional waters of the U.S., then a §404/§401 will likely be required. Since the USACE makes determinations on what is jurisdictional, you must contact the USACE to determine permitting requirements. See https://dnr.mo.gov/water/business-industry-other-entities/permits-certification-engineering-fees/section-401-water-quality for more information or or you may contact the department's Water Protection Program at 573-522-4502 or wpsc401cert@dnr.mo.gov.

11. Upon completion of construction:

    A. The City of Moberly will become the continuing authority for operation and maintenance of these facilities;

    B. Submit an electronic copy of the as-builts if the project was not constructed in accordance with previously submitted plans and specifications; and

    C. Submit the enclosed form Statement of Work Completed to the department in accordance with 10 CSR 20-6.010(5)(N). When the receiving facility applies for their next operating permit renewal, they will be expected to include updated information about the sanitary sewer collection system on their application.

Patrick Anderson, P.E.
Financial Assistance Center

APPENDIX

- **Summary of Design**

APPENDIX – SUMMARY OF DESIGN

Poepping, Stone, Bach & Associates, Inc.
Engineers, Architects, Surveyors, IT
www.psba.com

ENGINEERING REPORT
PROPOSED LIFT STATION
A PART OF THE
SPARKS AVENUE
LIFT STATION,
FORCE MAIN
AND SEWER EXPANSION
FOR THE CITY OF MOBERLY MISSOURI
PSBA PROJECT MH-18-514

REPORT PREPARED BY
PSBA, INC
100 S. 54TH STREET
QUINCY, ILLINOIS 62305
217-223-4605

5-23-2023

STATE OF MISSOURI
MICHAEL J. PUROL
NUMBER
PE-2007002824
REGISTERED PROFESSIONAL ENGINEER

5/23/23

TABLE OF CONTENTS

Engineering Report
Sparks Avenue Lift Station, Force main and Sewer Extensions
City of Moberly Missouri MH-18-514

The Sparks Avenue Lift station, force main and sewer extensions is a project that includes a proposed lift station, force main and gravity collection system designed to serve a currently unsewered area in Moberly Missouri. The lift station will be located on the south side of Sparks Avenue in front of Mac-Rac Manufacturing located at 100 Sparks Avenue. A 4" diameter force main will extend from the lift station to the east and connect to an existing manhole and then run through existing sewers to the Moberly Waste Water Treatment Plant. The gravity collection lines will extend along the north side of Sparks Avenue from Robinson Road to Sherman Street and connect to the lift station. These improvements are shown in the plans that are attached to this report in Appendix A.

The area that can be served by this lift station will include the commercial, industrial and light manufacturing located along Sparks Avenue from Robertson Road to the RR tracks east of Sherman Street. It will also include the mixed residential and commercial district located North of Sparks Avenue up to Baskett Avenue bounded by the RR Tracks on the east and Robertson Road on the west. Portions of this are will be served immediately upon construction and some will be served by future expansions of the gravity sewers to the north. The area to be served are shown in Appendix B.

Lift Station

The proposed lift station to be located on the south side of Sparks Avenue will consist of a 6' Diameter wet well with duplex submersible pumps. In a heated structure above the wet well will be a the controls and valves where the flows from the 2 pumps will be combined and then sent to the force main. Power to the lift station will be from an existing water pump station located 300 ' east on Sparks Avenue. There is an emergency generator at this location that was sized for the load of the water booster pump station and the sanitary lift station. In the event of a long power outage there are emergency piping connections to allow for the use of an existing City of Moberly diesel pump to bypass the pumps and maintain service until the power is restored.

The specified pumps to be installed in the system are Concertor DP N80 Flyght 1850 Rated for 130 Gallons at 35' of head. The pump curves and specifications are attached in Appendix C. The head calculations are attached as Appendix D. The system is being analyzed with one pump running at any given time but as an additional factor of safety the pumps will be set to alternate and will run in a lead lag configuration such that at any time the lead pump is unable to handle the flow the lag pump will be engaged to provide additional pump capacity.

Buoyancy Calculations

Despite the lift station being constructed from Concrete, when fully pumped down there is a possibility that the lift station could float out of the ground. Attached in Appendix E are the lift station buoyancy Calculations showing that this lift station with the attached oversized base will not float out of the ground even if it were empty and the ground water rose to the rim of the lift station. Under that scenario there is an uplift force of 44108 lbs being offset by a downward force of 88766 lbs providing a factor of safety of 2.01 against flotation.

Engineering Report
Sparks Avenue Lift Station, Force main and Sewer Extensions
City of Moberly Missouri MH-18-514

Flow Volumes

To develop the average flow rates the tables from the "SEWAGE FLOW RATE ESTIMATING GUIDE (pollutioncontrolsystem.com)" were used to determine average flows for all existing and proposed land uses. A copy of the table is included as Appendix F. If only the base bid is awarded the lift station and improvements will only be serving the Mac-Rac facility. This plant has approximately 100 employees working at the plant on a daily basis. Using the average rate of 13 gallons per employee per day this facility will generate a flow to the lift station of 1300 gallons per day, or an average flow of 54.1 gallons per hour.

Using the peaking factor from the Missouri DNR as listed below:

Peaking Factor = Q Peak Hourly / Q Design Avg = (18 + √P) / (4 + √P)
Where:

Q Peak Hourly = design peak hourly flow
Q Design Avg = design average flow = 1300/24 = 54.1 gallons per hour
P = Population in thousands 1300/100 gallons/1000 = .013

Using this yields a peaking factor of 4.403 and a maximum flow of 238 gal /hour. This maximum flow is below the capacity of the pump so there will not be a problem with surge overflow.

As the project is currently being proposed the new service along sparks avenue will immediately add 4 businesses with an estimated 16 employees and 7 houses with an average of 3 occupants. This will an additional daily flow of 160 from the businesses and 2100 from the houses for a total daily flow of 3560 and an hourly average of 148.3 and a peak of 642 Gal /hour

Ultimate Design

With the addition of sewer service this area and becomes desirable and expected to fully develop. The ultimate build out would add 1 additional large manufacturing business, 12 additional small businesses, and 36 more single family homes.

This ultimate developed scenario will have the following average Daily Flows:

Large Business	2 x 100 Employees x 13 Gal/employee	=	2600 GPD
Small Business	16 x 4 Employees x 13 Gallons/employee	=	832 GPD
Single Family Homes	43 x 3 Residents x 100 Gallons /day/Resident	=	12,900 GPD
		16332 GPD	16.3 P/E

Average Flow 680.5 GPH, Peak Flow factor 2.741, Peak flow 1865.8 GPH (31 gpm).

Engineering Report
Sparks Avenue Lift Station, Force main and Sewer Extensions
City of Moberly Missouri MH-18-514

PEAK STORAGE

Lift Stations are required to provide a minimum of 2 hours of emergency storage to be available in the event of service interruptions. Using the peak flow of 1865.8 galloon per hour x 2 hours yields a storage requirement of 3730 gallons. (16332/24x2).

The peak storage will be met when the effluent rises to an elevation of 862.5. This is 13.5 feet lower than the rim elevation of the first manhole after the lift station and should be lower than any basements in this area. At this depth the effluent will be 7.5' deep in the wet well and will also be backed up to Manholes 100, 101 and 105. The total storage at this time will be 3769 gallons which exceeds the two hour peak flow and therefore meet the regulatory guidelines.

SUMMARY

Based upon these calculations and assumptions this lift station, force main and gravity sewer are properly sized and will provide good economic service to the businesses and residents of Moberly Missouri. They will allow for the increased development of a central area surrounded by other areas that are already serviced increasing infill development and reducing sprawl.

Michael J. Purol

Missouri PE.
2007002824

Google Maps Sparks Avenue Lift Station

Imagery ©2022 Maxar Technologies, USDA/FPAC/GEO, Map data ©2022 200 ft

- Areas to be Served directly from Lift Station
- Areas to be Served by Gravity Sewers if Awarded
- Future Service Areas

Appendix B

Concertor DP N80-1850

A process-controlled wastewater pumping system suitable for customers who utilize specially designed process control algorithms and want to benefit from lower capital costs, smaller control cabinets and higher pump system efficiencies. Concertor DP is also suitable as a reliabl and energy efficient on/off controlled wastewater pumping system for customers who want t benefit from easily adjustable pump performance, soft start/soft stop, constant power and motor protection. This system is scalable to as many pumps as required by your application, with one gateway per pump.

FLYGT
a xylem brand

Technical specification

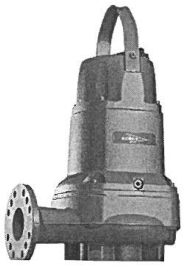

Curves according to: Water, pure [100%],39.2 °F,62.42 lb/ft³,1.6891E-5 ft²/s

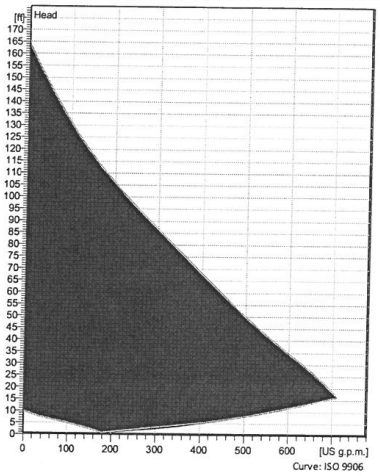

Curve: ISO 9906

Configuration

Motor number
N6020.181 18-08-1AZ-W 10hp

Installation type
P - Semi permanent, Wet

Impeller diameter
170 mm

Discharge diameter
3 inch

Pump information

Impeller diameter
170 mm

Discharge diameter
3 inch

Inlet diameter
100 mm

Maximum operating speed
800-3229.6 rpm

Number of blades
2

Max. fluid temperature
40 °C

Materials

Impeller
Hard-Iron ™

Project

Block

Created by

Created on 4/8/2022 **Last update** 4/8/2022

Concertor DP N80-1850

Technical specification

Motor - General

Motor number N6020.181 18-08-1AZ-W 10hp	**Phases** 3~	**Rated speed** 800-3230 rpm	**Rated power** 10 hp
ATEX approved No	**Insulation class** H	**Rated current** 10.9 A	**Type of Duty** S1
Frequency 60 Hz	**Rated voltage** 460 V	**Motor efficiency class** IE4 according to IEC/TS 60034-30-2 Ed. 1	

Motor - Technical

Power factor - 1/1 Load 0.94	**Motor efficiency - 1/1 Load** 89.0 %	**Nominal speed - 1/1 Load (200-240V)** 1150	**Nominal speed - 1/1 Load (380-480V)** 2300
Power factor - 3/4 Load 0.94	**Motor efficiency - 3/4 Load** 89.0 %	**Nominal speed - 3/4 Load (200-240V)** 1035	**Nominal speed - 3/4 Load (380-480V)** 2070
Power factor - 1/2 Load 0.93	**Motor efficiency - 1/2 Load** 90.0 %	**Nominal speed - 1/2 Load (200-240V)** 920	**Nominal speed - 1/2 Load (380-480V)** 1840

Starting current
10.9 A

Project

Block

Created by

Created on 4/8/2022 **Last update** 4/8/2022

Concertor DP N80-1850

Monitoring and Control equipment

FLYGT
a xylem brand

Gateway

Yes

Power Supply	24 V DC
Ports	1 x USB
	1 x RS485
	1 X Ethernet RJ 45
	1 x Display interface, CAN
Communication	Modbus RTU
	Modbus TCP
Standard I/O	4 x Digital outputs
	4 x Digital inputs
	1 x Analog input
	1 x Analog output
Pump Interface	1 x Pump Communication Port
User Interface	14 x LED
	1 x Rotator Switch
Data Logging	1000 data points
Environment Class	Protection class: IP 20
	Operation temperature: -20°C to +65°C
Software Version	DP software – Variable performance control via external signal, status and alarms
Approvals	CE, UL, CSA

Interface (HMI)

None

Project		**Created by**		**Last update**	4/8/2022
Block		**Created on**	4/8/2022		

Concertor DP N80-1850

Performance curve

FLYGT
a xylem brand

Duty point

Flow	Head
130 US g.p.m.	35.5 ft

Curves according to: Water, pure [100%],39.2 °F,62.42 lb/ft³,1.6891E-5 ft²/s

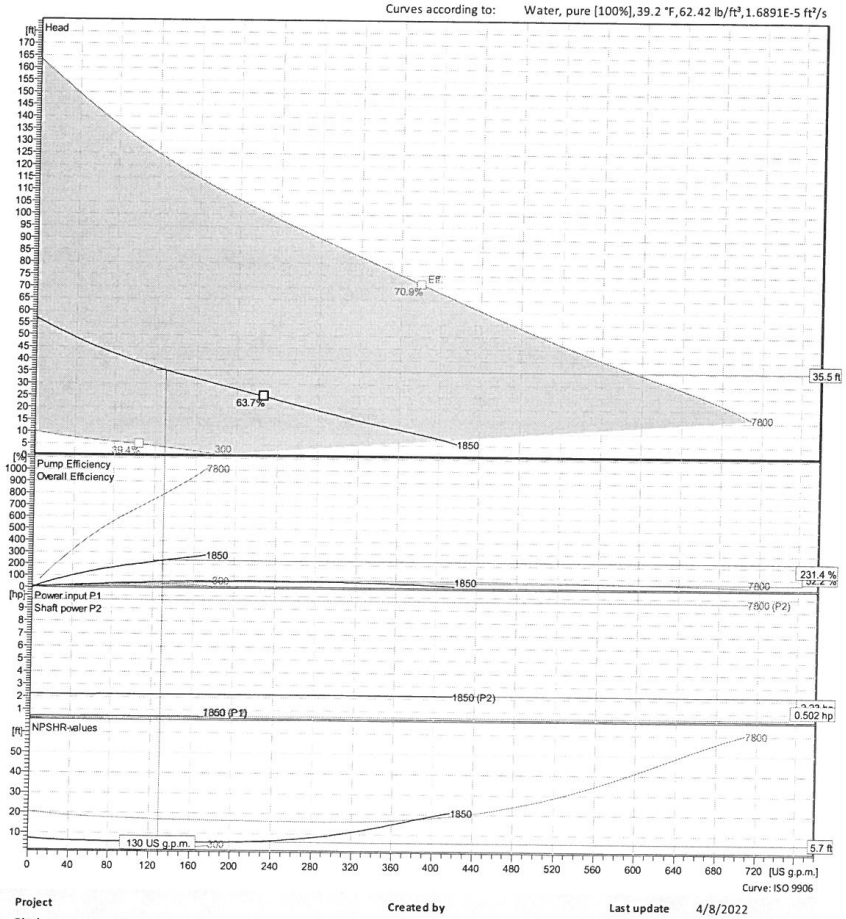

Project		Created by		Last update	4/8/2022
Block		Created on	4/8/2022		

Concertor DP N80-1850

Duty Analysis

FLYGT
a xylem brand

Curves according to: Water, pure [100%] ; 39.2°F; 62.42lb/ft³; 1.6891E-5ft²/s

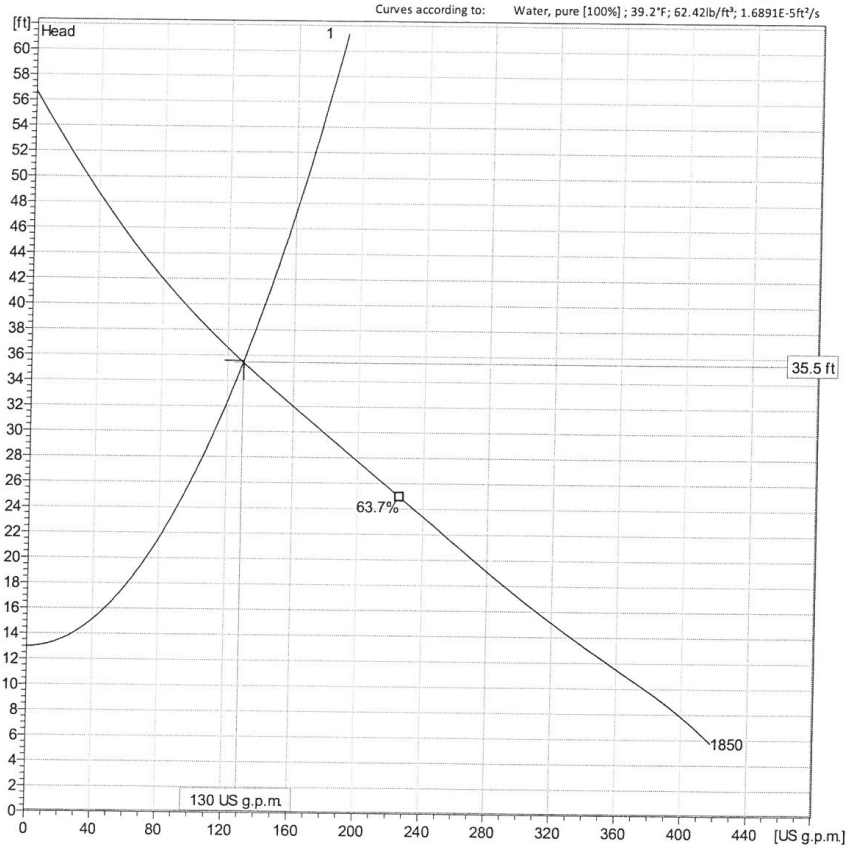

Operating characteristics

Pumps / Systems	Flow	Head	Shaft power	Flow	Head	Shaft power	Hydr.eff.	Specific energy	NPSHre
	US g.p.m.	ft	hp	US g.p.m.	ft	hp		kWh/US MG	ft
1	130	35.5	2.23	130	35.5	2.23	52.2 %	48.2	5.7

Project

Block

Created by

Created on 4/8/2022 **Last update** 4/8/2022

Concertor DP N80-1850

Dimensional drawing

FLYGT
a xylem brand

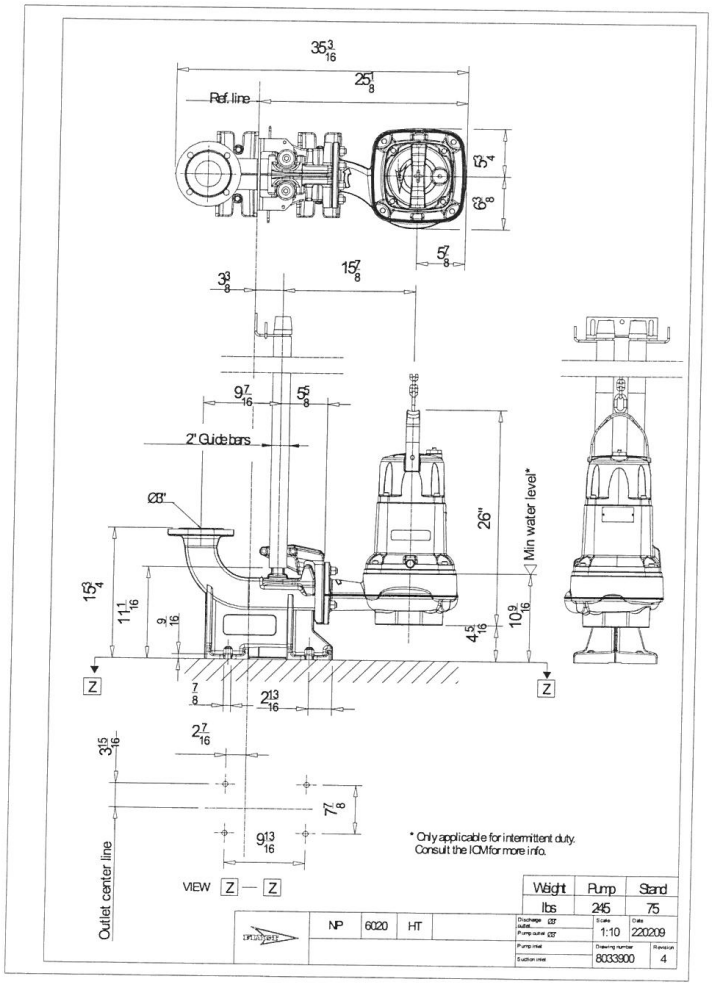

Project

Block

Created by

Created on 4/8/2022 **Last update** 4/8/2022

Program version
6.3.0 - 3/24/2022 (Build 69)

Data version
4/5/2022 13:01 A4P4

User group(s)
Xylem USA- EXT

Sparks Avenue, Moebelry Mo					Done By	EFD
Input only Red Numbers, Others Calculated					Checked B	Brad
Static Height in Lift Station	858	Feet				
Static Height to Storm Man	867.08	Feet				
Static Head	9.08					
Proposed Pipe Size	4	Inch				
Gallons per foot of pipe	0.652753004	gal				
Min Flow Rate for 2fps	78.33036053	Gpm				
Force Main	1390	Feet				
90 Deg Bends	35.4	Count	6	5.9	Feet Per	
45 Deg Bebds	10.5	Count	3	3.5	Feet Per	
Gate Valves	5.8	Each	2	2.9	Feet Per	
Swing Check Valves	44	Each	2	22	Feep Per	
10" Filter at Septic Tank	0	Each	0	0	Feet Per	
Meter	0	In PSI	0	0	Psi Loss	
Minor Losses	95.7					
Equivalent Length	1485.7					
Ploss Pipe	8.013531483	In Force Main				
Acutal Length	1485.7	Feet				
Flow	120	GMP				
Pipe Coeff	120	C				
Dia	4	Inches				
Piping Head	8.013531483					
Vertical Head	9.08					
Total Head	17.09353148					
Design	15	Head				
	120	GPM				
Minimum Cycle on Trickle Flow						
Depth at Pump On	859					
Depth at Pump Off	858					
Wet Well Dia	6	Feet				
Area	28.27433388					
Gallons/ Ft Height	211.4920174					
Storage in GALLONS	211.4920174					
Time to Empty	1.762433479	Min				
	105.7460087	Sec				
						Appendix D
						Page 1

Equivalent Length of Straight Pipe for Valves and Fittings (feet)														
Flanged Fittings		Pipe Size												
		1/2	3/4	1	1 1/4	1 1/2	2	2 1/2	3	4	5	6	8	10
Elbows	Regular 90 deg	0.9	1.2	1.6	2.1	2.4	3.1	3.6	4.4	5.9	7.3	8.9	12	14
	Long radius 90 deg	1.1	1.3	1.6	2.0	2.3	2.7	2.9	3.4	4.2	5	5.7	7	8
	Regular 45 deg	0.5	0.6	0.8	1.1	1.3	1.7	2.0	2.6	3.5	4.5	5.6	7.7	9
Tees	Line flow	0.7	0.8	1.0	1.3	1.5	1.8	1.9	2.2	2.8	3.3	3.8	4.7	5.2
	Branch flow	2.0	2.6	3.3	4.4	5.2	6.6	7.5	9.4	12.0	15	18	24	30
Return Bends	Regular 180 deg	0.9	1.2	1.6	2.1	2.4	3.1	3.6	4.4	5.9	7.3	8.9	12	14
	Long radius 180 deg	1.1	1.3	1.6	2.0	2.3	2.7	2.9	3.4	4.2	5	5.7	7	8
Valves	Globe	38.0	40.0	45.0	54.0	59.0	70.0	77.0	94.0	120.0	150	190	260	310
	Gate						2.6	2.7	2.8	2.9	3.1	3.2	3.2	3.2
	Angle	15.0	15.0	17.0	18.0	18.0	21.0	22.0	28.0	38.0	50	63	90	120

engineeringtoolbox.com

2	2.5	3	4	5	6	8	10	Size
3.1	3.6	4.4	5.9	8.9	8.9	12	14	90 Deg
1.7	2	2.6	3.5	4.5	5.6	7.7	9	45 Deg
2.6	2.7	2.8	2.9	3.1	3.2	3.2	3.2	Gate Valve
11	14	16	22	27	32	45	54	Check Valve

Check Valves Lenth From

Standard for the Installation of Sprinkler Systems 2016 of New York State > 23 Plans and Calculations > 23.4 Hydraulic Calculation Procedures > 23.4.3 Equivalent Pipe Lengths of Valves and Fittings

$$P_{loss} = 4.53 \times L \times \frac{\left(Q/C\right)^{1.852}}{D^{4.857}}$$

where:

P_{loss} = Pressure loss due to friction (psi)

L = Pipe lenth (ft)

Q = Flow rate of water inside pipe (gpm)

C = Pipe coefficient

PVC	=	150
Aluminum w/ Couplers	=	120
Galv. Steel/Asb.-cement	=	140
Cast Iron/Old Steel	=	100

D = Pipe inside diameter (in)

Lift Station Boyouancy Calcs				
Sparks Avenue				
Density Soil	110	Lb/cu ft	By	EFD
Density Water	62.4	Lb/cu ft	Date	5/12/2022
Density Concrete	150	Lb/cu ft	Job #	MH 18514
Ground Elevation	879	msl		
Invert	854	msl		
Length	0	feet		
Width	0	feet		
Diameter	6	feet		
Depth	25	feet		
Area Displaced	706.8582	Cu Ft		
Upward force	44107.95168	Lbs		
Wall Thickness	0.5	feet		
Wall Perimeter	28.27431	feet		
Wall Sq Ft Area	706.85775	feet		
Wall Conc Volume	353.428875	Cu Ft		
Wall weight	53014.33125	Lbs		
Bottom Slab Dia	8	Feet		
Length	0	feet		
Width	0	feet		
Bottom Slab Thickness	0.667	Feet		
Area of Slab	33.52707559	Sq Ft		
Weight of Slab	3354.383912	Lbs		
Area of Dry Soil	11.78097203	Cu Ft/ft		
Weight of Dry Soil	32397.67307	Lbs		
Downward Force	88766.38823	Lbs		
Factor of Safety	2.0124804	Ratio		Appendix E

Lift Station Boyouancy Calcs				
Sparks Avenue				
Density Soil	110	Lb/cu ft	By	EFD
Density Water	62.4	Lb/cu ft	Date	5/12/2022
Density Concrete	150	Lb/cu ft	Job #	MH 18514
Ground Elevation	879	msl		
Invert	854	msl		
Length	0	feet		
Width	0	feet		
Diameter	6	feet		
Depth	25	feet		
Area Displaced	706.8582	Cu Ft		
Upward force	44107.95168	Lbs		
Wall Thickness	0.5	feet		
Wall Perimeter	28.27431	feet		
Wall Sq Ft Area	706.85775	feet		
Wall Conc Volume	353.428875	Cu Ft		
Wall weight	53014.33125	Lbs		
Bottom Slab Dia	8	Feet		
Length	0	feet		
Width	0	feet		
Bottom Slab Thickness	0.667	Feet		
Area of Slab	33.52707559	Sq Ft		
Weight of Slab	3354.383912	Lbs		
Area of Dry Soil	11.78097203	Cu Ft/ft		
Weight of Dry Soil	32397.67307	Lbs		
Downward Force	88766.38823	Lbs		
Factor of Safety	2.0124804	Ratio		Appendix E

SEWAGE FLOW RATE ESTIMATING GUIDE

(Range and Typical are shown in gallons per unit)

Estimates are based on US standards for water usage and sewage strength.

Typical Wastewater Flow Rates from Commercial Sources

Source	Unit	Range	Typical
Airport	Passenger	2-4	3
Auto Service Station	Vehicle Served	7-13	10
	Employee	9-15	12
Bar	Customer	1-5	3
	Employee	10-16	13
Department Store	Toilet Room	400-600	500
	Employee	7-13	10
Industrial Building	Employee	7-16	13
(Sanitary Waste Only)			
Laundry (Self-Serve)	Machine	450-650	550
	Wash	45-55	50
Office	Employee	7-16	13
Restaurant	Meal	2-4	3
Shopping Center	Employee	7-13	10
	Parking Space	1-2	2

Typical Wastewater Flow Rates from Residential Sources

Source	Unit	Range	Typical
Apartment, High-Rise	Person	35-75	50
Low Rise	Person	50-80	65
Hotel	Guest	30-55	45
Individual Residence			
Typical Home	Person	45-90	70
Better Home	Person	60-100	80
Luxury Home	Person	75-150	95
Older Home	Person	30-60	45
Summer Cottage	Person	25-50	40
Motel			
with Kitchen	Unit	90-180	100
without kitchen	Unit	75-150	95
Mobile Home Park	Person	30-50	40

Typical Wastewater Flow Rates from Institutional Sources

Source	Unit	Range	Typical
Hospital, Medical	Bed	125-240	155
	Employee	5-15	10
Hospital, Mental Health	Bed	75-140	100
	Employee	5-15	10
Correctional Institution (Prison)	Inmate	75-150	115
	Employee	5-15	10
Rest Home	Resident	50-120	85
School, day			
w/ cafeteria, gym, & showers	Student	15-30	25
w/ cafeteria only	Student	10-20	15
no cafeteria; no gym	Student	5-17	11
School, boarding	Student	50-100	75

Typical Wastewater Flow Rates from Recreational Sources

Source	Unit	Range	Typical
Apartment, Resort	Person	50-70	60
Cabin, Resort	Person	8-50	40
Cafeteria	Customer	1-3	2
	Employee	8-12	10
Campground (developed)	Person	20-40	30
Cocktail Lounge	Seat	12-25	20
Coffee Shop	Customer	4-8	6
	Employee	8-12	10
Country Club	Member Present	60-130	100
	Employee	10-15	13
Day Camp (no meals)	Person	10-15	13
Dining Hall	Meal Served	4-10	7
Dormitory	Person	20-50	40
Hotel, Resort	Person	40-60	50
Store, Resort	Customer	1-4	3
	Employee	8-12	10
Swimming Pool	Customer	5-12	10
	Employee	8-12	10
Theatre	Seat	2-4	3
Visitor Center	Visitor	4-8	5

11/18/2014

Storage Calculations

5/23/2023			Effluent Surface		862.5	MSL	Moberly Mo		
Efd			Calculated Storage		3769.248	Gal	Sparks Ave		
Storage in Structures									
	Wet Well	MH 100	MH 101	MH 102	MH 103	MH 104	MH 105	MH 106	
Wet Well Dia	6	4	4	4	4	4	4	4	Feet
Area	28.27	12.57	12.57	12.57	12.57	12.57	12.57	12.57	Sq Ft
Gallons/ Ft Heig	211.49	94.00	94.00	94.00	94.00	94.00	94.00	94.00	Gal
Base Elevation	855	859.95	861.48	862.5	864.22	866.22	861.62	862.57	GPM
Depth	7.5	2.55	1.02	0	-1.72	-3.72	0.88	-0.07	
Storage	1586.190131	239.69095	95.87638	0	0	0	82.71688	0	

Storage in Sewer Pipes						
From/to	WW/MH100	100/101	100/105	101/102	105/106	
Dia	0.7	0.7	0.7	0.7	0.7	Dia in Ft
Length	45	303	135	185	185	
Area	0.35	0.35	0.35	0.35	0.35	Sq Ft
Volume	15.68	105.56	47.03	64.45	64.45	CU Ft
%Full	100.00%	100.00%	100.00%	50.00%	55.00%	
Volume	117.26	789.56	351.78	241.04	265.14	Gal

Appendix G

MISSOURI DEPARTMENT OF NATURAL RESOURCES
WATER PROTECTION PROGRAM

APPLICATION FOR CONSTRUCTION PERMIT – SEWER EXTENSION

FOR DEPARTMENT USE ONLY	
APP NO.	CP NO.
FEE RECEIVED	CHECK NO.
DATE RECEIVED	

NOTE ▶ PLEASE READ THE ACCOMPANYING INSTRUCTIONS BEFORE COMPLETING THIS FORM

1.0 APPLICATION INFORMATION (Note – If any of the questions in this section are answered NO, this application may be considered incomplete and returned.)

1.1 Is this a Federal/State funded project? ☑ YES ☐ N/A Funding Agency: CDBG Project #:

1.2 Has the Department of Natural Resources approved the proposed project's engineering report*?
☑ YES Date of Approval: 3/9/2018 ☐ NO ☐ N/A

1.3 Is a copy of the appropriate plans* and specifications* included with this application? ☑ YES ☐ NO

1.4 Is a summary of design* included with this application? ☐ YES ☑ NO

1.5 Is the appropriate fee or JetPay confirmation included with this application? ☑ YES ☐ NO
See Section 7.0

* Must be affixed with a Missouri registered professional engineer's seal, signature and date.

2.0 PROJECT INFORMATION

2.1 NAME OF PROJECT
Sparks Avenue Lift Station, Force Main and Sewer Extension

ADDRESS	CITY	STATE	ZIP CODE	COUNTY
100 W Sparks Avenue	Moberly	Missouri	65270	Randolph

2.2 Legal Description: NW ¼, NW ¼, ¼, Sec. 36 , T 54 , R 14w

2.3 Project Components (check all that apply):
☑ Gravity sewers ☑ Pumping stations ☑ Force mains ☐ Alternative sewer system ☐ Other (Describe below.)

2.4 PROJECT DESCRIPTION
Install gravity sewers, a pump station, and force main to serve a new manufacturing company with 30 employees as well as the surrounding homes. Provisiosn are included to expand the gravity collection system to serve additionl existing and proposed homes in the area.

2.5 DESIGN INFORMATION
A. Population or number of lots to be served by this extension: 3 initial, 100 future
B. Estimated flow to be contributed by this extension: Design Average Flow: 600 gpd Design Peak Hourly Flow: 60 gph
C. Industrial Wastes: Type: N/A Flow: gpd
D. Receiving Sewer: Size: 8 inches Capacity: 4444 gpm

3.0 PROJECT OWNER

NAME	TELEPHONE NUMBER WITH AREA CODE	EMAIL ADDRESS
City of Moberly Mo	660-269-8705	dulmer@cityofmoberly.com

ADDRESS	CITY	STATE	ZIP CODE
101 W Reed Street	Moberly	MO	65270

4.0 CONTINUING AUTHORITY: A continuing authority is a company, business, entity or person(s) that will be operating the facility or ensuring compliance with the permit requirements. A continuing authority is not, however, an entity or individual that is contractually hired by the permittee to sample or operate and maintain the system for a defined time period, such as a certified operator or analytical laboratory. To access the regulatory requirement regarding continuing authority, 10 CSR 20-6.010(2), please visit https://s1.sos.mo.gov/cmsimages/adrules/csr/current/10csr/10c20-6.pdf. A continuing authority's name must be listed exactly as it appears on the Missouri Secretary of State's (SoS's) webpage: https://bsd.sos.mo.gov/BusinessEntity/BESearch.aspx?SearchType=0, unless the continuing authority is an individual(s), government, or otherwise not required to register with the SoS.

NAME	TELEPHONE NUMBER WITH AREA CODE	EMAIL ADDRESS
City of Moberly, Mo	660-269-8705	dulmer@cityofmoberly.com

ADDRESS	CITY	STATE	ZIP CODE
101 W Reed Street	Moberly	MO	65270

4.1 A letter from the continuing authority or the Continuing Authority and Receiving Wastewater Treatment Facility Acceptance form, if different than the owner, is included with this application. ☐ YES ☐ NO ☑ N/A

5.0 ENGINEER

ENGINEER NAME / COMPANY NAME	TELEPHONE NUMBER WITH AREA CODE	EMAIL ADDRESS
Michael Purol, PSBA inc	217-223-4605	michaelp@psba.com

ADDRESS	CITY	STATE	ZIP CODE
100 S 54th Street,	Quincy	IL	62305

6.0 RECEIVING WASTEWATER TREATMENT FACILITY

NAME	TELEPHONE NUMBER WITH AREA CODE	EMAIL ADDRESS
Moberly WWTP	660-269-9437	elute@cityofmoberly.com

MISSOURI STATE OPERATING PERMIT #	REMAINING CAPACITY (GPD)
mo-0117960	1.5 MGD

6.1 Has the receiving treatment facility agreed to accept the additional wastewater flow? ☑ YES ☐ NO

6.2 A letter from the receiving wastewater treatment facility, if different than the continuing authority, is included with this application.
☐ YES ☐ NO ☑ N/A

7.0 Application Fee

☑ Check Number ☑ JetPay Confirmation Number 20037513

8.0 PROJECT OWNER: I certify under penalty of law that this document and all attachments were prepared under my direction or supervision in accordance with a system designed to assure that qualified personnel properly gather and evaluate the information submitted. Based on my inquiry of the person or persons who manage the system, or those persons directly responsible for gathering the information, the information submitted is, to the best of my knowledge and belief, true, accurate, and complete. I am aware that there are significant penalties for submitting false information, including the possibility of fine and imprisonment for knowing violations.

PROJECT OWNER SIGNATURE

Dana Ulmer

PRINTED NAME	DATE
Dana Ulmer	10-3-2022

TITLE OR COPORATE POSITION	TELEPHONE NUMBER WITH AREA CODE	EMAIL ADDRESS
Public Utilities Director	660-269-7659	Dulmer@cityofmoberly.com

Mail completed copy to:

MISSOURI DEPARTMENT OF NATURAL RESOURCES
WATER PROTECTION PROGRAM
P.O. BOX 176
JEFFERSON CITY, MO 65102-0176

SEWER EXTENSION DESIGN CERTIFICATION

Answer all questions yes, no, or N/A. Answer N/A only if the question is clearly not applicable to the design of the proposed sewer extension **OR** if a deviation was previously allowed by the Department in the approval of Standard specifications or Standard Detail Sheets.

9.0 SEWER EXTENSION CHECKLIST					
	REGULATION		YES	NO	N/A
1	8.110(9)(B)	Are detailed plans showing tributary area, boundaries, pertinent elevations, topography, existing and proposed facilities provided?	☑	☐	☐
2	8.110(3)(A)	Is the design flow based on actual flow data for an existing system?	☑	☐	☐
3	8.110(3)(B)	Are average design flows, peak hourly flows, and I&I contributions for new systems calculated.	☑	☐	☐
4	8.120(2)	Does the sewer exclude water from roofs, streets, groundwater from foundation drains, and combined wastewater?	☑	☐	☐
5	8.120(3)(C)	Is ASTM C969-17 leakage test specified to ensure water tight joint seals and appropriate exfiltration and infiltration rates?	☑	☐	☐
6	8.120(4)(A)	Are manholes located at all changes in grade, size or alignment, and all intersections?	☑	☐	☐
7	8.120(3)(A)1	Are all sewer pipes constructed with a slope to obtain mean velocities of not less than 2 feet per second?	☑	☐	☐
8	8.120(3)(A)2	Is the pipe covered with at least 36" of soil or sufficiently insulated to prevent freezing?	☑	☐	☐
9	8.120(3)(A)	Is the pipe installation, embedment, and backfill designed to prevent damage to the pipe and its joints?	☑	☐	☐
10	8.120(3)(B)	Is deflection testing specified to ensure no pipe exceeds a deflection of 5% of the inside diameter?	☑	☐	☐
11	8.120(4)(C)	Are manholes at least 42 inches in diameter with a clear opening of 22 inches on sewer line larger than 8"?	☑	☐	☐
12	8.120(4)(C)	Where cleanouts are used at the end of a lateral instead of a manhole, are they a minimum diameter of 8 inches or larger and equal to the diameter for pipes < 8"?	☑	☐	☐
13	8.120(4)(E)	Are the manholes specified to be watertight, constructed, installed in accordance with the manufacturer's recommendations and procedures?	☑	☐	☐
14	8.120(4)(F)	Do the specifications include a requirement for inspection and testing for manholes?	☑	☐	☐
15	8.120(5)(B)	Are sewers and manholes located at least 50 feet horizontally from any existing or proposed water supply well, sources, structures?	☑	☐	☐
16	8.120(5)(A)	Is the sewer free from physical connections to a potable water supply system with no water pipes coming in contact with a sewer manhole?	☑	☐	☐

10.0 PRESSURE SEWERS, GRINDER PUMP, STEP AND STEG SEWER CHECKLIST					
	REGULATION		YES	NO	N/A
17	8.125(5)(A)1.	Does the cleaning velocity of ≥ 2 ft/s happen at least once per day?	☑	☐	☐
18	8.125(5)(A)2.	Is the diameter of the pressure sewer main pipe at least 1.5"?	☑	☐	☐
19	8.125(5)B	Are appurtenances compatible with the piping system?	☑	☐	☐
20	8.125(5)(C)	Do service line pipes have a minimum diameter of 1.25 in.?	☑	☐	☐
21	8.125(5)(D)1. A	Do simplex grinder pump stations service only a single equivalent dwelling unit (EDU)? i.e. 1 residence – 1 grinder pump station.	☐	☐	☑
22	8.125(5)(D)1. B	Are multiple unit pump stations owned, operated, maintained by an approved continuing authority?	☑	☐	☐
23	8.125(5)(D)3	Is there at least 70 gallons of storage in the grinder pump unit?	☑	☐	☐
24	8.125(5)(D)4	Do grinder pump stations have shutoff valves, check valves, and anti-siphon valves (where siphoning could occur) that are accessible from the ground surface?	☑	☐	☐
25	8.125(5)(D)7 8.130(3)(B)2	Are units serviceable and replaceable under wet conditions without electrical hazard and electrical equipment suitable for hazardous locations (National Electrical Code, Class I, Group D, Division 1 location)?	☑	☐	☐
26	8.125(5)(D)8 8.125(6)(F)6	Are provisions in place to avoid interruption of service due to mechanical or power failure by providing standby power, storage capacity or interconnection with another disposal system?	☑	☐	☐
27	8.125(6)(D) 8.180(2)	Does each EDU have at least one septic tank with a minimum of 1,000 gallon capacity with 20% of tank volume dedicated to freeboard and ventilation?	☐	☐	☑
28	8.125(6)(F)	Are pump vaults designed with duplex pumps for STEP sewer systems with design flow of 1,500 gallons per day or greater?	☐	☐	☑
29	8.125(7)(A) 8.125(7)(C)	Is the minimum STEG sewerservice line at least 4" in diameter?	☐	☐	☑

11.0 PUMP STATION CHECKLIST					
	REGULATION		YES	NO	N/A
30	8.130(2)(A) 8.140(2)(B)	Is the pump station designed to withstand the 100-year flood?	☑	☐	☐
31	8.130(3)(A)	Is the dry well completely separate from the wet well and is a suitable and safe means of access provided to each?	☐	☐	☑
32	8.130(3)(B)	If the design flow is 1,500 gpd or more, are at least 2 pumps or pneumatic ejectors provided?	☑	☐	☐
33	8.130(3)(D)	Are valves located outside wet well unless integral to a pump or its housing?	☑	☐	☐
34	8.130(3)(F) 8.140(8)(J)	Do wet and dry wells have separate ventilation systems?	☐	☐	☑
35	8.130(3)(G)	Does all potable water brought to the pump station comply with 8.140 (7) D?	☐	☐	☑
36	8.130(6)	Is an alarm system provided with uninterrupted power?	☐	☐	☑
37	8.130(7)(A)	Is there 2 hours retention of the peak hourly flow for a design flow > 100,000 gpd or 4 hrs retention of the peak hourly flow for a design flow < 100,000 gpd?	☑	☐	☐
38	8.130(7)(B)	Is there an independent utility substation provided for emergency power that is capable of starting and operating the pump station at its rated capacity?	☐	☐	☑
39	8.130(8)(A)	Is the force main velocity of ≥ 2 ft/s maintained?	☑	☐	☐
40	8.130	Are there complete operation instructions for the pumping stations provided that include emergency procedures, maintenance schedules, special tools and spare parts that may be necessary?	☑	☐	☐

12.0 SUCTION LIFT PUMP AND SUBMERSIBLE PUMP STATION CHECKLIST

	REGULATION		YES	NO	N/A
41	8.130(4)	Are the suction lift pumps of the self priming or vacuum priming type?	☐	☐	☑
42	8.130(4)(A)	Is the combined total of dynamic suction lift at the "pump off" elevation and required net positive suction head at design operating conditions less than or equal to twenty-two feet (22')?	☑	☐	☐
43	8.130(4)(B)	Are there dual vacuum pumps capable of removing air from the suction lift pump?	☐	☐	☑
44	8.130(5)(A)	Are submersible pumps readily removable and replaceable without personel entering, or disconnecting any pipe in the wet well?	☑	☐	☐

13.0 CERTIFICATION STATEMENT

I hereby certify that the design plans and specifications for this project, to the best of my knowledge, conform to the requirements listed above. I am aware that there are significant penalties for submitting false information, including the possibility of fine and imprisonment.

I hereby certify that this plan, specification, and/or report was prepared by me or under my direct supervision and that I am a duly Licensed Professional Engineer under the laws of the state of Missouri.

For any question answered "NO" provide explanation. Provide any useful comments on design for review engineer:

Missouri Professional Engineer's Seal:

Name: Michael J Purol, P.S.B.A.
Street Address: 100 S 54th Street
City: Quincy State: Illinois ZIP Code: 62305

Phone Number: 217-223-4605 Email: MichaelP@PSBA.com