Permit No. CP0002254

STATE OF MISSOURI

DEPARTMENT OF NATURAL RESOURCES

MISSOURI CLEAN WATER COMMISSION

CONSTRUCTION PERMIT

The Missouri Department of Natural Resources hereby issues a permit to:

Brad Nevois
Assistant Director of Engineering
The Mertropolitan St. Louis Sewer District
2350 Market Street
St. Louis, MO 63103

for the construction of (described facilities):

See attached.

Permit Conditions:

See attached.

Construction of such proposed facilities shall be in accordance with the provisions of the Missouri Clean Water Law, Chapter 644, RSMo, and regulation promulgated thereunder, or this permit may be revoked by the Department of Natural Resources (Department).

As the Department does not examine structural features of design or the efficiency of mechanical equipment, the issuance of this permit does not include approval of these features.

A representative of the Department may inspect the work covered by this permit during construction. Issuance of a permit to operate by the Department will be contingent on the work substantially adhering to the approved plans and specifications.

This permit applies only to the construction of water pollution control components; it does not apply to other environmentally regulated areas.

April 22, 2022
Effective Date

April 21, 2024
Expiration Date

Chris Wieberg

Chris Wieberg, Director, Water Protection Program

CONSTRUCTION PERMIT

I. CONSTRUCTION DESCRIPTION

Metropolitan St. Louis Sewer District (MSD) Lower Meramec Wastewater Treatment Facility (WWTF) will be converting the existing Phase I trickling filter WWTF to the Phase II Conventional Activated Sludge (CAS) WWTF. The Phase II design identifies new primary clarifiers, aeration basins, secondary clarifiers, and disinfection systems with additional process units for preliminary treatment (fine screens), grit removal, solids handling, odor control and miscellaneous process upgrades.

The existing Phase I facility is currently sized to treat wastewater flows from the Baumgartner Lagoon and the Meramec Lagoon. The Phase II construction permitted in CP0002254 will increase the treatment capacity to serve the existing Phase I service area with additional capacity for the Fenton Service Area via the Lower Meramec Tunnel.

The MSD Lower Meramec WWTF is preparing for more stringent effluent limits for ammonia, nitrogen, and phosphorus as they may be imposed in the future. The Phase II improvements are not only based on the current permitted effluent limits, but also envisions a facility that can meet more stringent effluent limits in the future while maximizing the design life of current and future assets.

Specific treatment units from the existing facility will be demolished during the Phase II facility construction. Decomissioned treatment units include, two trickling filters and two secondary clarifiers.

Treatment units from the Phase I facility will be repurposed to the Peak Wet Weather Treatment Train for the Phase II CAS facility including the two existing Primary Clarifiers No 1 & 2, Wet Weather Junction Chamber, and Chlorine Contact Basins No 1 & 2.

New construction for the Phase II facility will include the commissioning and installation of 3 fine screens, primary influent splitter box, blower building with 3 blowers, 2 new primary clarifiers, primary effluent splitter box, return activated sludge splitter box, 4 aeration basins, 3 secondary clarifiers, return activated sludge/waste activated sludge splitter box, mixed liquor splitter box, 2 chlorine contact basins, grit tanks, gravity thickener, belt filter press, cake hoppers, and odor control systems.

This project will also include general site work appropriate to the scope and purpose of the project and all necessary appurtenances to make a complete and usable wastewater treatment facility.

II. COST ANALYSIS FOR COMPLIANCE

Pursuant to Section 644.145, RSMo, when issuing permits under this chapter that incorporate a new requirement for discharges from publicly owned combined or separate sanitary or storm sewer systems or publicly owned treatment works, or when enforcing provisions of

this chapter or the Federal Water Pollution Control Act, 33 U.S.C. 1251 et seq., pertaining to any portion of a publicly owned combined or separate sanitary or storm sewer system or [publicly owned] treatment works, the Department of Natural Resources shall make a "finding of affordability" on the costs to be incurred and the impact of any rate changes on ratepayers upon which to base such permits and decisions, to the extent allowable under this chapter and the Federal Water Pollution Control Act. This process is completed through a cost analysis for compliance. Permits that do not include new requirements may be deemed affordable.

The Department is required to determine "findings of affordability" because the permit applies to a combined or separate sanitary sewer system for a publically-owned treatment works.

Cost Analysis for Compliance - The Department has made a reasonable search for empirical data indicating the permit is affordable. The search consisted of a review of Department records that might contain economic data on the community, a review of information provided by the applicant as part of the application, and public comments received in response to public notices of this draft permit. If the empirical cost data was used by the permit writer, this data may consist of median household income, any other ongoing projects that the Department has knowledge, and other demographic financial information that the community provided as contemplated by Section 644. 145.3. See **APPENDIX – COST ANALYSIS FOR COMPLIANCE**.

III. CONSTRUCTION PERMIT CONDITIONS

The permittee is authorized to construct subject to the following conditions:

1. This construction permit does not authorize discharge.

2. All construction shall be consistent with plans and specifications signed and sealed by Douglas D. Hickey, P.E. with HDR and as described in this permit.

3. The Department must be contacted in writing prior to making any changes to the plans and specifications that would directly or indirectly have an impact on the capacity, flow, system layout, or reliability of the proposed wastewater treatment facilities or any design parameter that is addressed by 10 CSR 20-8, in accordance with 10 CSR 20-8.110(11).

4. State and federal law does not permit bypassing of raw wastewater, therefore steps must be taken to ensure that raw wastewater does not discharge during construction. If a sanitary sewer overflow or bypass occurs, report the appropriate information to the Department's St. Louis Regional Office per 10 CSR 20-7.015(9)(G).

5. The wastewater treatment facility shall be located at least fifty feet (50') from any dwelling or establishment per 10 CSR 20-8.140(2)(C).

6. The wastewater treatment facility shall be located above the twenty-five (25)-year flood level.

7. The wastewater facility structures, electrical equipment, and mechanical equipment shall be protected from physical damage by not less than the one hundred- (100-) year flood elevation per 10 CSR 20-8.140(2)(B). The minimum distance between wastewater treatment facilities and all potable water sources shall be at least three hundred feet (300') per 10 CSR 20-8.140(2)(C)1.

8. In addition to the requirements for a construction permit, 10 CSR 20-6.200 requires land disturbance activities of 1 acre or more to obtain a Missouri state operating permit to discharge stormwater. The permit requires best management practices sufficient to control runoff and sedimentation to protect waters of the state. Land disturbance permits will only be obtained by means of the Department's ePermitting system available online at dnr.mo.gov/env/wpp/epermit/help.htm. See https://dnr.mo.gov/water/business-industry-other-entities/permits-certification-engineering-fees/stormwater for more information.

9. A United States Army Corps of Engineers (USACE) Clean Water Act Section 404 Department of the Army permit and a Section 401 Water Quality Certification issued by the Department may be required for the activities described in this permit. This permit is not valid until these requirements are satisfied or notification is provided that no Section 404 permit is required by the USACE. You must contact your local USACE district since they determine what waters are jurisdictional and which permitting requirements may apply. You may call the Department's Water Protection Program, Operating Permits Section at 573-522-4502 for more information. See https://dnr.mo.gov/water/business-industry-other-entities/permits-certification-engineering-fees/section-401-water-quality?order=title&sort=desc for more information.

10. All construction must adhere to applicable 10 CSR 20-8 (Chapter 8) requirements listed below.

- Flood protection shall apply to new construction and to existing facilities undergoing major modification. The wastewater facility structures, electrical equipment, and mechanical equipment shall be protected from physical damage by not less than the one hundred- (100-) year flood elevation. 10 CSR 20-8.140(2)(B). and 10 CSR 20-8.130(2)(A)

- Facilities shall be readily accessible by authorized personnel from a public right–of-way at all times. 10 CSR 20-8.140(2)(D) and 10 CSR 20-8.130(2)(B)

- Adequate provisions shall be made to effectively protect facility personnel and visitors from hazards. The following shall be provided to fulfill the particular needs of each wastewater treatment facility: 10 CSR 20-8.130(2)(C)
    - Fencing. Enclose the facility site with a fence designed to discourage the entrance of unauthorized persons and animals; 10 CSR 20-8.140(8)(A)

- Gratings over appropriate areas of treatment units where access for maintenance is necessary; 10 CSR 20-8.140(8)(B)
- First aid equipment; 10 CSR 20-8.140(8)(C)
- Posted "No Smoking" signs in hazardous areas; 10 CSR 20-8.140(8)(D)
- Appropriate personal protective equipment (PPE); 10 CSR 20-8.140(8)(E)
- Portable blower and hose sufficient to ventilate accessed confined spaces; 10 CSR 20-8.140(8)(F)
- 10 CSR 20-8.140(8)(G) Portable lighting equipment complying with NEC requirements. See subsection (7)(B) of this rule;
- 10 CSR 20-8.140(8)(H) Gas detectors listed and labeled for use in NEC Class I, Division 1, Group D locations. See subsection (7)(B) of this rule;
- Appropriately-placed warning signs for slippery areas, non-potable water fixtures (see subparagraph (7)(D)3.B. of this rule), low head clearance areas, open service manholes, hazardous chemical storage areas, flammable fuel storage areas, high noise areas, etc.; 10 CSR 20-8.140(8)(I)
- Ventilation shall include the following:
    - Isolate all pumping stations and wastewater treatment components installed in a building where other equipment or offices are located from the rest of the building by an air-tight partition, provide separate outside entrances, and provide separate and independent fresh air supply; 10 CSR 20-8.140(8)(J)1.
    - Force fresh air into enclosed screening device areas or open pits more than four feet (4') deep. Interconnection between the wet well and dry well ventilation systems is not acceptable; 10 CSR 20-8.140(8)(J)2.
    - Dampers are not to be used on exhaust or fresh air ducts. Avoid the use of fine screens or other obstructions on exhaust or fresh air ducts to prevent clogging; 10 CSR 20-8.140(8)(J)3.
    - Where continuous ventilation is needed (e.g., housed facilities), provide at least twelve (12) complete air changes per hour. Where continuous ventilation would cause excessive heat loss, provide intermittent ventilation of at least thirty (30) complete air changes per hour when facility personnel enter the area. Base air change demands on one hundred percent (100%) fresh air; 10 CSR 20-8.140(8)(J)4.
    - Electrical controls. Mark and conveniently locate switches for operation of ventilation equipment outside of the wet well or building. Interconnect all intermittently operated ventilation equipment with the respective wet well, dry well, or building lighting system. The manual lighting/ventilation switch is expected to override the automatic controls. For a two (2) speed ventilation system with automatic switch over where gas detection equipment is installed, increase the ventilation rate automatically in response to the detection of hazardous concentrations of gases or vapors; 10 CSR 20-8.140(8)(J)5.
    - Fabricate the fan wheel from non-sparking material. Provide automatic heating and dehumidification equipment in all dry wells and buildings.; 10 CSR 20-8.140(8)(J)6.
- Explosion-proof electrical equipment, non-sparking tools, gas detectors, and similar devices, in work areas where hazardous conditions may exist, such as

digester vaults and other locations where potentially explosive atmospheres of flammable gas or vapor with air may accumulate.; 10 CSR 20-8.140(8)(K)
  - Provisions for local lockout/tagout on stop motor controls and other devices; 10 CSR 20-8.140(8)(L)
  - Provisions for an arc flash hazard analysis and determination of the flash protection boundary distance and type of PPE to reduce exposure to major electrical hazards shall be in accordance with NFPA 70E *Standard for Electrical Safety in the Workplace* (2018 Edition), as approved and published August 21, 2017. 10 CSR 20-8.140(8)(M)

- The distance between wastewater pumping stations and all potable water sources shall be at least fifty feet (50') in accordance with 10 CSR 23-3.010(1)(B). 10 CSR 20-8.130(2)(D)

- Dry wells, including their superstructure, shall be completely separated from the wet well with gas tight common walls. 10 CSR 20-8.130(3)(A)1.

- Suitable and safe means of access to dry wells and to wet wells shall be provided to persons wearing self-contained breathing apparatus. 10 CSR 20-8.130(3)(A)2.

- Multiple pumps shall be provided except for design average flows of less than fifteen hundred (1,500) gallons per day. 10 CSR 20-8.130(3)(B)1.

- Electrical equipment. Electrical equipment shall be provided with the following requirements:
  - 10 CSR 20-8.130(3)(B)2. A. Electrical equipment must comply with 10 CSR 20-8.140(7)(B);
  - Utilize corrosive resistant equipment located in the wet well; 10 CSR 20-8.130(3)(B)2.B.
  - Provide a watertight seal and separate strain relief for all flexible cable; 10 CSR 20-8.130(3)(B)2.C.
  - Install a fused disconnect switch located above ground for the main power feed for all pumping stations. 10 CSR 20-8.130(3)(B)2.D.
  - When such equipment is exposed to weather, it shall comply with the requirements of weather proof equipment; enclosure NEMA 4; NEMA 4X where necessary; and *NEMA Standard 250-2014*, published December 15, 2014. 10 CSR 20-8.130(3)(B)2.E.
  - Install lightning and surge protection systems; 10 CSR 20-8.130(3)(B)2.F.
  - Install a one hundred ten volt (110 V) power receptacle inside the control panel located outdoors to facilitate maintenance; 10 CSR 20-8.130(3)(B)2.G.
  - Provide Ground Fault Circuit Interruption (GFCI) protection for all outdoor receptacles. 10 CSR 20-8.130(3)(B)2.H.

- Water level controls must be accessible without entering the wet well. 10 CSR 20-8.130(3)(C)

- Valves shall not be located in the wet well unless integral to a pump or its housing. 10 CSR 20-8.130(3)(D)

- Covered wet wells shall have provisions for air displacement to the atmosphere, such as an inverted and screened "j" tube or other means. 10 CSR 20-8.130(3)(E)

- Interconnection between the wet well and dry well ventilation systems is not acceptable.10 CSR 20-8.130(3)(F)

- There shall be no physical connection between any potable water supply and a wastewater pumping station, which under any conditions, might cause contamination of the potable water supply. If a potable water supply is brought to the station, No piping or other connections shall exist in any part of the wastewater treatment facility that might cause the contamination of a potable water supply. 10 CSR 20-8.130(3)(G)
    - Hot water for any direct connections shall not be taken directly from a boiler used for supplying hot water to a digester heating unit or heat exchanger. 10 CSR 20-8.140(7)(D)2.
    - Where a potable water supply is to be used for any purpose in a wastewater treatment facility other than direct connections, a break tank, pressure pump, and pressure tank or a reduced pressure backflow preventer consistent with the department's Public Drinking Water Branch shall be provided. 10 CSR 20-8.140(7)(D)3.A.
    - For indirect connections, a sign shall be permanently posted at every hose bib, faucet, hydrant, or sill cock located on the water system beyond the break tank or backflow preventer to indicate that the water is not safe for drinking. 10 CSR 20-8.140(7)(D)3.B.
    - Where a separate non-potable water supply is to be provided, a break tank will not be necessary, but all system outlets shall be posted with a permanent sign indicating the water is not safe for drinking. 10 CSR 20-8.140(7)(D)4.

- 10 CSR 20-8.130(4)(C) Wet well access shall not be through the equipment compartment.

- Submersible pump stations shall meet the applicable requirements under section (3) of this rule, except as modified in this section. 10 CSR 20-8.130(5)
    - Pump Removal. Submersible pumps shall be readily removable and replaceable without personnel entering, dewatering, or disconnecting any piping in the wet well. 10 CSR 20-8.130(5)(A)
    - 10 CSR 20-8.130(5)(B) Valve Chamber and Valves. Valves required under subsection (3)(D) of this rule shall be located in a separate valve chamber.
    - A minimum access hatch dimensions of twenty-four inches by thirty-six inches (24" x 36") shall be provided. 10 CSR 20-8.130(5)(B)1.

- A portable pump connection on the discharge line with rapid connection capabilities shall be provided. 10 CSR 20-8.130(5)(B)2.

- Alarm systems with an uninterrupted power source shall be provided for pumping stations. 10 CSR 20-8.130(6)

- Where independent substations are used for emergency power, each separate substation and its associated distribution lines shall be capable of starting and operating the pump station at its rated capacity. 10 CSR 20-8.130(7)(B)

- Force main system shall be designed to withstand all pressures (including water hammer and associated cyclic reversal of stresses), and maintain a velocity of at least two feet (2') per second. 10 CSR 20-8.130(8)(A)

- Unless another distance is determined by the Missouri Geological Survey or by the department's Public Drinking Water Branch, the minimum distance between wastewater treatment facilities and all potable water sources shall be at least three hundred feet (300'). 10 CSR 20-8.140(2)(C)1.

- The outfall shall be so constructed and protected against the effects of flood water, ice, or other hazards as to reasonably ensure its structural stability and freedom from stoppage. 10 CSR 20-8.140(6)(A)

- All sampling points shall be designed so that a representative and discrete twenty-four (24) hour automatic composite sample or grab sample of the effluent discharge can be obtained at a point after the final treatment process and before discharge to or mixing with the receiving waters. 10 CSR 20-8.140(6)(B)

- All outfalls shall be posted with a permanent sign indicating the outfall number (i.e., Outfall #001). 10 CSR 20-8.140(6)(C)

- Disinfection and dechlorination, when used, shall be provided during all power outages. 10 CSR 20-8.140(7)(A)2.

- Electrical systems and components in raw wastewater or in enclosed or partially enclosed spaces where hazardous concentrations of flammable gases or vapors that are normally present, shall comply with the NFPA 70 *National Electric Code (NEC)* (2017 Edition), as approved and published August 24, 2016, requirements for Class I, Division 1, Group D locations. 10 CSR 20-8.140(7)(B)

- An audiovisual alarm or a more advanced alert system, with a self-contained power supply, capable of monitoring the condition of equipment whose failure could result in a violation of the operating permit, shall be provided for all wastewater treatment facilities. 10 CSR 20-8.140(7)(C)

- No piping or other connections shall exist in any part of the wastewater treatment facility that might cause the contamination of a potable water supply. 10 CSR 20-8.140(7)(D)1.

- A means of flow measurement shall be provided at all wastewater treatment facilities. 10 CSR 20-8.140(7)(E)

- Effluent twenty-four (24) hour composite automatic sampling equipment shall be provided at all mechanical wastewater treatment facilities and at other facilities where necessary under provisions of the operating permit. 10 CSR 20-8.140(7)(F)

- The materials utilized for storage, piping, valves, pumping, metering, and splash guards, etc., for chemical handling, shall be specially selected considering the physical and chemical characteristics of each hazardous or corrosive chemical. 10 CSR 20-8.140(9)(A)1.

- Secondary containment storage areas contain the stored volume of chemical until it can be safely transferred to alternate storage or released to the wastewater treatment plant at controlled rates that will not damage the facilities, inhibit the treatment processes, or contribute to stream pollution. Secondary containment shall be designed as follows:
    - A minimum volume of one hundred twenty-five percent (125%) of the volume of the largest storage container located within the containment area plus the space occupied by any other tanks located within the containment area when not protected from precipitation; 10 CSR 20-8.140(9)(A)2.A.
    - A minimum volume of one hundred ten percent (110%) of the volume of the largest storage container located within the containment area plus the space occupied by any other tanks located within the containment area when protected from precipitation; 10 CSR 20-8.140(9)(A)2.B.
    - Walls and floors of the secondary containment structure constructed of suitable material that is compatible with the specifications of the product being stored. 10 CSR 20-8.140(9)(A)2.C.

- All pumps or feeders for hazardous or corrosive chemicals shall have guards that will effectively prevent spray of chemicals into space occupied by facility personnel. 10 CSR 20-8.140(9)(A)3.

- All piping containing or transporting corrosive or hazardous chemicals shall be identified with labels every ten feet (10') and with at least two (2) labels in each room, closet, or pipe chase. 10 CSR 20-8.140(9)(A)4.A.

- All connections (flanged or other type), except those adjacent to storage or feeder areas, shall have guards that will direct any chemical leakage away from space occupied by facility personnel. 10 CSR 20-8.140(9)(A)4.B.

- Facilities shall be provided for automatic shutdown of pumps and sounding of alarms when failure occurs in a pressurized chemical discharge line. 10 CSR 20-8.140(9)(A)5.

- Dust collection equipment shall be provided to protect facility personnel from dusts injurious to the lungs or skin and to prevent polymer dust from settling on walkways that become slick when wet. 10 CSR 20-8.140(9)(A)6.

- The following shall be provided to fulfill the particular needs of each chemical housing facility:

- Provide storage for a minimum of thirty (30) days' supply, unless local suppliers and conditions indicate that such storage can be reduced without limiting the supply; 10 CSR 20-8.140(9)(B)1.
- Construct the chemical storage room of fire and corrosion resistant material; 10 CSR 20-8.140(9)(B)2.
- Equip doors with panic hardware. To prevent unauthorized access, doors lock but do not need a key to exit the locked room using the panic hardware; 10 CSR 20-8.140(9)(B)3.
- Provide chemical storage areas with drains, sumps, finished water plumbing, and the hose bibs and hoses necessary to clean up spills and to wash equipment; 10 CSR 20-8.140(9)(B)4.
- Construct chemical storage area floors and walls of material that is suitable to the chemicals being stored and that is capable of being cleaned; 10 CSR 20-8.140(9)(B)5.
- Install floor surfaces to be smooth, chemical resistant, slip resistant, and well drained with three inches per ten feet (3"/10') minimum slope; 10 CSR 20-8.140(9)(B)6.
- Provide adequate lighting; 10 CSR 20-8.140(9)(B)7.
- Comply with the NEC recommendation for lighting and electrical equipment based on the chemicals stored. 10 CSR 20-8.140(9)(B)8.
- Store chemical containers in a cool, dry, and well-ventilated area; 10 CSR 20-8.140(9)(B)9.
- Design vents from feeders, storage facilities, and equipment exhaust to discharge to the outside atmosphere above grade and remote from air intakes; 10 CSR 20-8.140(9)(B)10.
- Locate storage area for chemical containers out of direct sunlight; 10 CSR 20-8.140(9)(B)11.
- Maintain storage temperatures in accordance with relevant Material Safety Data Sheets (MSDS). 10 CSR 20-8.140(9)(B)12.
- Control humidity as necessary when storing dry chemicals; 10 CSR 20-8.140(9)(B)13.
- Design the storage area with designated areas for "full" and "empty" chemical containers; 10 CSR 20-8.140(9)(B)14.
- Provide storage rooms housing flammable chemicals with an automatic sprinkler system designed for four tenths gallons per minute per square foot (0.4 gpm/ft^2) and a minimum duration of twenty (20) minutes; 10 CSR 20-8.140(9)(B)15.
- Store incompatible chemicals separately to ensure the safety of facility personnel and the wastewater treatment system. Store any two (2) chemicals that can react to form a toxic gas in separate housing facilities; 10 CSR 20-8.140(9)(B)16.
- Design and isolate areas intended for storage and handling of chlorine and sulfur dioxide and other hazardous gases. 10 CSR 20-8.140(9)(B)17.
- Design an isolated fireproof storage area and explosion proof electrical outlets, lights, and motors for all powdered activated carbon storage and handling areas in accordance with federal, state, and local requirements; 10 CSR 20-8.140(9)(B)18.
- Vent acid storage tanks to the outside atmosphere, but not through vents in common with day tanks; 10 CSR 20-8.140(9)(B)19.

- Keep concentrated acid solutions or dry powder in closed, acid-resistant shipping containers or storage units; 10 CSR 20-8.140(9)(B)20.
- Pump concentrated liquid acids in undiluted form from the original container to the point of treatment or to a covered storage tank. Do not handle in open vessels. 10 CSR 20-8.140(9)(B)21.

- The following shall be provided, where applicable, for the design of chemical handling:
  - Make provisions for measuring quantities of chemicals used for treatment or to prepare feed solutions over the range of design application rates; 10 CSR 20-8.140(9)(C)1.
  - Select storage tanks, piping, and equipment for liquid chemicals specific to the chemicals; 10 CSR 20-8.140(9)(C)2.
  - Install all liquid chemical mixing and feed installations on corrosion resistant pedestals; 10 CSR 20-8.140(9)(C)3.
  - Provide sufficient capacity of solution storage or day tanks feeding directly for twenty-four- (24-) hour operation at design average flow; 10 CSR 20-8.140(9)(C)4.
  - Provide a minimum of two (2) chemical feeders for continuous operability. Provide a standby unit or combination of units of sufficient capacity to replace the largest unit out-of-service; 10 CSR 20-8.140(9)(C)5.
  - Chemical feeders shall—
    - Be designed with chemical feed equipment to meet the maximum dosage requirements for the design average flow conditions; 10 CSR 20-8.140(9)(C)6.A.
    - Be able to supply, at all times, the necessary amounts of chemicals at an accurate rate throughout the range of feed; 10 CSR 20-8.140(9)(C)6.B.
    - Provide proportioning of chemical feed to the rate of flow where the flow rate is not constant; 10 CSR 20-8.140(9)(C)6.C.
    - Be designed to be readily accessible for servicing, repair, and observation; 10 CSR 20-8.140(9)(C)6.D.
    - Protect the entire feeder system against freezing; 10 CSR 20-8.140(9)(C)6.E.
    - Be located adjacent to points of application to minimize length of feed lines; 10 CSR 20-8.140(9)(C)6.F.
    - Provide for both automatic and manual operation for chemical feed control systems; 10 CSR 20-8.140(9)(C)6.G.
    - Utilize automatic chemical dose or residual analyzers, and where provided, include alarms for critical values and recording charts; 10 CSR 20-8.140(9)(C)6.H.
    - Provide screens and valves on the chemical feed pump suction lines; 10 CSR 20-8.140(9)(C)6.I.
    - Provide an air break or anti-siphon device where the chemical solution enters the water stream; 10 CSR 20-8.140(9)(C)6.J.
    - Dry chemical feed system shall—
      - Be equipped with a dissolver capable of providing a minimum retention period of five (5) minutes at the maximum feed rate; 10 CSR 20-8.140(9)(C)7.A.

            - Be equipped with two (2) solution vessels and transfer piping for polyelectrolyte feed installations; 10 CSR 20-8.140(9)(C)7.B.
            - Have an eductor funnel or other appropriate arrangement for wetting the polymer during the preparation of the stock feed solution on the makeup tanks; 10 CSR 20-8.140(9)(C)7.C.
            - Provide adequate mixing by means of a large diameter, low-speed mixer; 10 CSR 20-8.140(9)(C)7.D.
            - Make provisions to measure the dry chemical volumetrically or gravimetrically; 10 CSR 20-8.140(9)(C)7.E.
            - Completely enclose chemicals and prevent emission of dust; 10 CSR 20-8.140(9)(C)7.F.
    - Provide for uniform strength of solution consistent with the nature of the chemical solution for solution tank dosing; 10 CSR 20-8.140(9)(C)8.
    - Use solution feed pumps to feed chemical slurries that are not diaphragm or piston type positive displacement types; 10 CSR 20-8.140(9)(C)9.
    - Provide continuous agitation to maintain slurries in suspension; 10 CSR 20-8.140(9)(C)10.
    - Provide a minimum of two (2) flocculation tanks or channels having a combined detention period of twenty to thirty (20 – 30) minutes. Provide independent controls for each tank or channel; 10 CSR 20-8.140(9)(C)11.
    - Insulate pipelines carrying soda ash at concentrations greater than twenty percent (20%) solution to prevent crystallization; 10 CSR 20-8.140(9)(C)12.
    - Prohibit bagging soda ash in a damp or humid place. 10 CSR 20-8.140(9)(C)13.

- The following chemical safety items shall be provided in addition to the safety provisions in section (8) of this rule:
    - Appropriate personal protective equipment (PPE). 10 CSR 20-8.140(9)(D)1.
    - Eye wash fountains and safety showers utilizing potable water shall be provided in the laboratory and on each level or work location involving hazardous or corrosive chemical storage, mixing (or slaking), pumping, metering, or transportation unloading. The design of eye wash fountains and safety showers shall include the following:
        - Eye wash fountains with water of moderate temperature, fifty degrees to ninety degrees Fahrenheit (50°–90°F), suitable to provide fifteen to thirty (15–30) minutes of continuous irrigation of the eyes; 10 CSR 20-8.140(9)(D)2.A.
        - Emergency showers capable of discharging twenty gallons per minute (20 gpm) of water of moderate temperature, fifty degrees to ninety degrees Fahrenheit (50°–90°F), and at pressures of thirty to fifty pounds per square inch (30–50 psi); 10 CSR 20-8.140(9)(D)2.B.
        - Eye wash fountains and emergency showers located no more than twenty-five feet (25') from points of hazardous chemical exposure; 10 CSR 20-8.140(9)(D)2.C.
        - Eye wash fountains and showers that are to be fully operable during all weather conditions; 10 CSR 20-8.140(9)(D)2.D.
    - Warning signs requiring use of goggles shall be located near chemical stations, pumps, and other points of frequent hazard. 10 CSR 20-8.140(9)(D)3.

- The identification and hazard warning data included on chemical shipping containers, when received, shall appear on all containers (regardless of size or type) used to store, carry, or use a hazardous substance. 10 CSR 20-8.140(9)(E)

- All wastewater treatment facilities must have a screening device, comminutor, or septic tank for the purpose of removing debris and nuisance materials from the influent wastewater. 10 CSR 20-8.150(2)

- All screening devices and screening storage areas shall be protected from freezing. 10 CSR 20-8.150(4)(A)1.

- Provisions shall be made for isolating or removing screening devices from their location for servicing. 10 CSR 20-8.150(4)(A)2.

- Manually cleaned screen channels shall be protected by guard railings and deck gratings with adequate provisions for removal or opening to facilitate raking. 10 CSR 20-8.150(4)(A)3.A.(I)

- Mechanically cleaned screen channels shall be protected by guard railings and deck gratings. 10 CSR 20-8.150(4)(A)3.A.(II)

- Mechanical screening equipment shall have adequate removal enclosures to protect facility personnel against accidental contact with moving parts and to prevent dripping in multi-level installations. 10 CSR 20-8.150(4)(A)3.B.(I)

- A positive means of locking out each mechanical screening device shall be provided. 10 CSR 20-8.150(4)(A)3.B.(II)

- An emergency stop button with an automatic reverse function shall be located in close proximity to the mechanical screening device. 10 CSR 20-8.150(4)(A)3.B.(III)

- Where two (2) or more mechanically cleaned bar screens are used, the design shall provide for taking the largest unit out-of-service without sacrificing the capability to handle the average design flow. Where only one mechanically cleaned screen is used, it shall be sized to handle the design peak instantaneous flow. 10 CSR 20-8.150(4)(B)

- Grit removal facilities are required for wastewater treatment facilities that utilize membrane bioreactors for secondary treatment; utilize anaerobic digestion; receive wastewater from combined sewers; or receive wastewater from collection systems that receive substantial amounts of grit. 10 CSR 20-8.150(6)

- Effective flow splitting devices and control appurtenances (*e.g.* gates and splitter boxes) shall be provided to permit proper proportioning of flow and solids loading to each settling unit, throughout the expected range of flows. 10 CSR 20-8.160(2)(B)

- Overflow weirs shall be readily adjustable over the life of the structure to correct for differential settlement of the tank. 10 CSR 20-8.160(3)(C)1.

- Walls of settling tanks shall extend at least six inches (6") above the surrounding ground surface and shall provide not less than twelve inches (12") of freeboard. 10 CSR 20-8.160(3)(E)

- Safety features shall appropriately include machinery covers, life lines, handrails on all stairways and walkways, and slip resistant surfaces. For additional safety follow the provisions listed in 10 CSR 20-8.140(8). 10 CSR 20-8.160(5)(A)

- The design shall provide for convenient and safe access to routine maintenance items such as gear boxes, scum removal mechanism, baffles, weirs, inlet stilling baffle areas, and effluent channels. 10 CSR 20-8.160(5)(B)

- For electrical equipment, fixtures, and controls in enclosed settling basins and scum tanks, where hazardous concentrations of flammable gases or vapors may accumulate, follow the provisions in 10 CSR 20-8.140(7)(B). The fixtures and controls shall be conveniently located and safely accessible for operation and maintenance. 10 CSR 20-8.160(5)(C)

- All wastewater treatment facilities shall be provided with an alternate source of electric power or pumping capability to allow continuity of operation during power failures. 10 CSR 20-8.140(7)(A)1.

- Where a potable water supply is to be used for any purpose in a wastewater treatment facility other than direct connections, a break tank, pressure pump, and pressure tank or a reduced pressure backflow preventer consistent with the department's Public Drinking Water Branch shall be provided. 10 CSR 20-8.140(7)(D)3.A.

- For indirect connections, a sign shall be permanently posted at every hose bib, faucet, hydrant, or sill cock located on the water system beyond the break tank or backflow preventer to indicate that the water is not safe for drinking. 10 CSR 20-8.140(7)(D)3.B.

- Where a separate non-potable water supply is to be provided, a break tank will not be necessary, but all system outlets shall be posted with a permanent sign indicating the water is not safe for drinking. 10 CSR 20-8.140(7)(D)4.

- Isolate all wastewater treatment components installed in a building where other equipment or offices are located from the rest of the building by an air-tight partition, provide separate outside entrances, and provide separate and independent fresh air supply. 10 CSR 20-8.140(7)(G)

- For solids pumping systems, audio-visual alarms shall be provided in accordance with 10 CSR 20-8.140(7)(C) for:
    - Pump failure; 10 CSR 20-8.170(6)(A)
    - Pressure loss; 10 CSR 20-8.170(6)(B) and
    - High pressure. 10 CSR 20-8.170(6)(C)

- Belt presses and conveyors shall be provided with emergency shutoff controls along the entire length of the belt presses and conveyors that will:
    - Stop the press in an emergency; 10 CSR 20-8.170(7)(A)1. and
    - Trigger an audible alarm. 10 CSR 20-8.170(7)(A)2.

- Alarm systems shall be provided for sludge dewatering processes to notify the operator(s) of conditions that could result in process equipment failure or damage, threaten operator safety, or a solids spill or overflow condition. 10 CSR 20-8.170(7)(B)

- Emergency Power. Disinfection and dechlorination processes, when used, shall be provided during all power outages. 10 CSR 20-8.190(2)(A)

- Contact period for Chlorine Disinfection. A minimum contact period of fifteen (15) minutes at design peak hourly flow or maximum rate of pumpage shall be provided after thorough mixing. 10 CSR 20-8.190(3)(A)

- Alarm System for chlorination and dechlorination systems. The applicant shall conform to 10 CSR 20-8.140(7)(C) and be responsible for specifying what the alarm requirements are necessary to assure consistent disinfection in compliance with the applicable bacteria limits and the disinfection residual limit in the effluent. 10 CSR 20-8.190(3)(C)

- Effluent twenty-four (24) hour composite automatic sampling equipment shall be provided at all mechanical wastewater treatment facilities and at other facilities where necessary under provisions of the operating permit. 10 CSR 20-8.190(3)(D)

- Contact time. A minimum of thirty (30) seconds for mixing and contact time of dechlorination systems shall be provided at the design peak hourly flow or maximum rate of pumpage. 10 CSR 20-8.190(4)(B)2.

11. Upon completion of construction:

    A. THE METROPOLITAN ST. LOUIS SEWER DISTRICT will become the continuing authority for operation and maintenance of these facilities;

    B. Submit an electronic copy of the as builts if the project was not constructed in accordance with previously submitted plans and specifications; and

    C. Submit the enclosed Form MO 780-2155, Wastewater Construction Statement of Work Completed to the Department in accordance with 10 CSR 20-6.010(5)(N) and request the previously public noticed draft permit be issued.

IV. REVIEW SUMMARY

1. CONSTRUCTION PURPOSE

The Phase II expansion of Lower Meramec WWTF is being pursued to serve as a regional facility to treat wastewater from the Phase I area, the Fenton Service Area (Lower Meramec WWTF Phase II Expansion), and Grand Glaize Service Area (Lower Meramec WWTP Phase III Expansion, which has subsequently been eliminated through revision of the Section 208 Plan). The Phase II expansion is necessary for the treatment facility to be able to accept and treat these additional flows from the Fenton Service Area. New regulatory limits for effluent nitrogen and phosphorus are expected to be imposed on the Lower Meramec WWTF in different increments in the future. The initial Phase II design is based on $CBOD_5$ and TSS removal, while allowing future improvements to incorporate nutrient removal.

2. FACILITY DESCRIPTION

The existing system (Phase I) is constructed as an equivalent to secondary trickling filter plant. With the construction of the Phase II Conventional Activated Sludge (CAS) facility, some equipment will be decommissioned for the conversion from Phase I to Phase II. The two existing trickling filters and two existing secondary clarifiers will be demolished with the permitted construction.

Several areas of the facility will be repurposed to convert the facility from the Phase I to the Phase II system. Two of the existing primary clarifiers will be repurposed for peak wet weather flow diversion with the Phase II facility construction. The overflow channel of the existing trickling filter wet well will be repurposed to become a peak wet weather junction chamber. The two existing chlorine contact basins will also be repurposed for the wet weather treatment train disinfection system.

New construction for the Phase II facility will include the construction of a new CAS treatment train including 3 fine screens, 2 primary clarifiers, 4 aeration basins, blower building with 3 new blowers, 3 new secondary clarifiers, 2 chlorine contact basins, 3 splitter boxes (primary influent, primary effluent/return activated sludge, and mixed liquor).

The MSD, Lower Meramec WWTF is located at 7849 Fine Road, in St. Louis County, Missouri. The facility has a design average flow of 16 MGD and serves a hydraulic population equivalent of approximately 160,000 people.

3. COMPLIANCE PARAMETERS

The proposed project is required to meet final effluent limits established in the Antidegradation review dated April 2020 and the operating permit modification public noticed on October 29, 2021.

The following effluent limits following the completion of construction will be applicable to the facility:

Effluent Parameters	Units	Daily Maximum	Weekly Average	Monthly Average
Flow	MGD	*		*
Carbonaceous Biochemical Oxygen Demand$_5$	mg/L		40	25
Total Suspended Solids	mg/L		45	30
E. coli	#/100mL		1,030	206
Ammonia as N-summer	mg/L	*		*
Oil & Grease	mg/L	15		10
Total Residual Chlorine	µg/L	439		219
Total Phosphorus	mg/L	*		*
Total Kjeldahl Nitrogen	mg/L	*		*
Nitrite + Nitrate	mg/L	*		*
Nitrogen, total as N	mg/L	*		*
Acute Whole Effluent Toxicity	TU_a	*		
Chronic Whole Effluent Toxicity	TU_c	*		
Effluent Parameter	**Units**	**Minimum**		**Maximum**
pH	SU	6.0		9.0

Effluent Parameters	Units	Monthly Average Minimum
Carbonaceous Biochemical Oxygen Demand-Percent Removal	%	85
Total Suspended Solids-Percent Removal	%	85

* Monitoring Requirement Only

4. ANTIDEGRADATION

The Department has reviewed the antidegradation report for this facility and issued the Water Quality and Antidegradation Review dated April 2020, due to the increase in design flow with the Phase II expansion. See **APPENDIX – ANTIDEGRADATION**.

5. REVIEW of MAJOR TREATMENT DESIGN CRITERIA

Existing major components that will remain in use from the Phase I Facility include the following equipment and structures:

- Screenings Building with Coarse Screens
- Influent Pump Station
- Process Building
- Raw Sewage Overflow Box and Screened Raw Sewage Overflow Chamber
- Primary Sludge Pumps No 1, 2, & 3

- Primary Clarifiers No 1 & 2 – repurposed to Peak Wet Weather Primary Clarifiers No 1 & 2
- Secondary Treatment Building – some equipment will be abandoned in place according to plans, other systems will remain in use including the secondary treatment building plant drain pump station
- Peak Wet Weather Junction Chamber – repurposed from the Trickling Filter Pump Station Wet Well
- Main Piping Gallery
- Chlorine Contact Basins No 1 & 2 – repurposed to Peak Wet Weather Train Disinfection System
- Disinfection Building
- Administrative Building – with building addition
- Grit Tanks No 1 & 2
- Grit Hoppers No 1 & 2
- Degritted Sludge Sump
- Gravity Thickeners No 1 & 2 and Gravity Thickener Gallery
- Thickened Sludge Pumps 1, 2, & 3
- Belt Filter Press No 1 & 2
- Cake Storage Hoppers No 1 & 2
- Manhole 10 & 11
- Effluent Box
- Outfall 001

New Construction for Phase II will cover the following items:

- Components are designed for a Population Equivalent of 160,000 based on hydraulic loading to the system.

- Screening Shaft Odor Control Unit – The Phase II design will replace the existing odor control system serving the Influent Screening Structure. The new sytem will include 2 humidifiers and 2 Biofilter cells to treat an average inlet H_2S Concentration of 0.1 ppmv with a removal efficiency of 99%. This translates into an odor removal efficiency of 80%.

- Mechanical Fine Screen – Installation of screening devices removes nuisance inorganic materials from raw wastewater. Three mechanically cleaned fine screens in dual channels with a maximum perforated plate spacing of 6 mm will be added. The existing screen 72 inch screen in channel 4 will be replaced. The screening devices shall be capable of treating a design average flow of 16 MGD and a peak hourly flow of 100 MGD, and the current design sizes the screens for a peak flow of 126 MGD total. The addition of multiple mechanically cleaned fine screens provides redundancy and improved screening of inorganic materials. Flow from each of the two 72 inch fine screen effluent channels leaves via a 54 inch pipe, and each of these three pipes then combine into a 54 inch primary influent header.

- Wet Weather Flow Equalization – Wet weather flow equalization will be utilized during wet weather events where the peak flow is greater than the design peak capacity of the treatment facility. The two existing primary clarifiers (Primary Clarifier No 1 and Primary Clarifier No 2) will be repurposed for wet weather flow diversion. The repurposed wet weather clarifiers have a design volume of 0.69 MG for each clarifier, 1.38 MG total. Each wet weather clarifier is 90 ft in diameter. Once the wet weather event subsides, the diverted wet weather flow will be disinfected prior to blending in the effluent box according to the current blending terms in the effective operating permit.

- New Primary Clarifier 3 & 4 – A primary clarifier removes settleable organic and inorganic solids by sedimentation and floatables and scum by skimming. Two new primary clarifiers will be constructed as Primary Clarifier No. 3 and Primary Clarifier No. 4. The sidewater depth for the new pimary clarifiers is 11.8 feet which exceeds the minimum 10 feet requirement identified in 10 CSR 20-8.160(3)(A). The surface overflow rate of the new clarifiers at design average flow is 1,019 gpd/ft^2 which is less than the maximum surface overflow rate of 1,400 gpd/ft^2 for chemically enhanced primary clarifiers identified in 10 CSR 20-8.160(3)(B)1. The design weir overflow rate is established at 29,985 gpd/lf at peak hourly flow, which is under the maximum weir overflow rate of 30,000 gpd/lf established in 10 CSR 20-8.160(3)(C)2.

  Additional land is reserved for the construction of two additional primary clarifiers (Primary Clarifier No 5 and Primary Clarifier No 6) that may be constructed as the facility expands. Primary Clarifiers No 5 & 6 are not permitted for construction in CP0002254.

- Aeration Basins No. 1, 2, 3, & 4 – Four new aeration basins will be constructed to facilitate secondary treatment. The new aeration basins will have a total volume of approximately 3 MG for all four parallel treatment trains. Each train is divided into two zones having a total combined volume of 0.75 MG and measuring 100 feet long by 50 feet wide by 20 feet deep. The anaerobic selector zone volume is established at 8% of the entire aeration basin to ecourage the growh of the floc forming bacteria to facilitate better settling and thickening properties. The oxygen demand for this design configuration is 12,300 lb/day at a maximum monthly flow of 23.1 MGD.

  Additional land is reserved for the construction of future aeration basins and potentially post anoxic or aeration tanks that will be extended from the aeration basins that are permitted for construction in CP0002254.

- Blowers – Three new high speed magnetic turbo blowers will provide process air for the four new aeration basins. Acceptable manufacturers are specified as Sulzer-ABS or Atkas Copco with no approved equal identified. The summary of design identifies an oxygen demand of 12,300 lb/day at a maximum monthly flow of 23.1 MGD. Various air demand conditions were considered for the design. The three blowers are specified to deliver 3,840 scfm/blower for a peak air demand of 9,000 scfm.

A new Blower Building will be constructed for the new blowers and will also include a new electrical room and restroom. Applicable building codes and authorities having jurisdiction are identified on plan sheet 56A101. Space is allocated for a fourth blower that can be installed in the future. The 3 blowers permitted for construction are arranged in a single row to reduce minor loss in the main header and to have the air intakes on a the same side of the building.

- Secondary Clarifier No. 1, 2, & 3 – Three new secondary clarifiers will be constructed with a total surface area of 39,800 ft^2 or 13,267 ft^2 per clarifier. The clarifiers will have a 130 ft diameter and a surface overflow rate of 1,000 gpd/ft^2 [40,000,000 gpd/39,800 ft^2] which meets the minimum allowed in 10 CSR 20-8.160(B)3. Flows greater than 40,000,000 will be routed to the wet weather treatment train.The sidewater depth will be 15.9 ft. The weir loading rate is 19,036 gpd/lf which meets the requirements of 10 CSR 20-8.160(3)(C)2. of being less than the maximum 30,000 gpd/lf. The solids loading rate is 15 lbs/day/ft^2 which meets the requirements of 10 CSR 20-8.160(3)(B)3 of less than 40 lbs/day/ft^2 at peak flow.

  Additional land is reserved for the construction of a future Secondary Clarifier No.4 as the facility expands. Secondary Clarifier No. 4 is not permitted for construction in CP0002254.

- Disinfection – Disinfection is the process of removal, deactivation, or killing of pathogenic microorganisms. New disinfection capacity will be required for the expanded design flow and peak flow. Two new chlorine contact basisns in the mirror image of the current system will be constructed as Chlorine Contact Basin No 3 and Chlorine Contact Basin No 4. The existing Chlorine Contact Basins No 1 and 2 will be repurposed for peak wet weather use only.
  - Chlorine Contact Basins No. 3 and No. 4 – Construction of two new concrete chlorine contact basins approximately 89 ft x 117.5 ft x 18 ft with 10 end-around baffles allowing for a 66:1 length to width ratio. This tank will allow for a 15-minute contact time during peak hourly flows up to 60 MGD.
  - Liquid Sodium Hypochlorite – Disinfection will be accomplished by the addition of sodium hypochorite to secondary treated effluent. Three existing 6,150 gallon sodium hypochlorite chemical storage tanks will be replaced as they are at the end of their useful life. The 3 new tanks are specified with a capacity between 5,500 and 6,200 gallons to store 12.5 wt% sodium hypochlorite liquid. New chemical metering pumps for each chemical, and associated appurtenances, will be required to feed the chemical to the new chlorine contact basins, maintaining secondary containment through transport in double contained piping. Three new chemical metering pumps will each be capable of providing a capacity range between 3 to 125 gph of disinfectant.
  - Liquid Sodium Bisulfite – Dechlorination will be accomplished by the addition of sodium bisulfite to chlorine contact basin effluent. Two existing 6,150 gallon sodium bisulfite chemical storage tanks tanks will be replaced as they are at the end of their useful life. The 2 new tanks are specified with a capacity between 5,500 and 6,200 gallons to store 38-40 wt% sodium bisulfite liquid. Three new sodium bisulfite chemical metering pumps will each be capable of providing a

capacity range between 0.4 to 30 gph to remove chlorine residual prior to discharge. Dechlorination will occur at the end of each new contact basin prior to the effluent weir.

- Disinfection Building – The proposed wastewater treatment facility will be housed in a 63 ft x 63 ft x 18 ft building. Building design was developed in accordance with high hazard and moderate hazard industrial occupancy classifications. The scope of work does not modify the level of fire protection provided. Decomissioned equipment and new scope of construction is discussed in the disinfection section.

- Emergency Power – The Lower Meramec WWTF has two power feeds from a power plant adjacent to the WWTF. An automatic transfer switch connects the second power feed in the event that the first line fails. In the unlikely event that both power feeds fail, flow through the treatment facility would cease since the influent pump station would shut down.

- Return Activated Sludge (RAS)/Waste Activated Sludge (WAS) Pump Station – Construction of a RAS/WAS pump station and associated valves. WAS submersible pumps will convey from the WAS wet well to the sludge thickeners. The WAS pumps will be capable of each pumping 200 gpm at 68 ft of TDH with a 17 HP motor at normal operations. The WAS pumps are utilized to pump WAS from the secondary clarifiers to the grit removal units. The WAS pumps are designed to pump WAS at 0.57 MGD at maximum monthly flow.

  RAS submersible pumps will pump from the RAS pump station wet well to the PEF/RAS splitter box. The RAS rate is 100% at the maximum monthly flow, 16 MGD. The four RAS pumps with VFDs are designed for 4,653 gpm at 34 ft TDH.

- Grit Removal – Grit removal will be dedicated to the primary sludge streams combined with the waste activated sludge. Under standard conditions, the primary clarifier sludge will come from the new primary clarifiers; however, during peak wet weather, additional sludge will be processed from the peak wet weather clarifiers. Two existing and one new unit for grit processing will be utilized of the trade names of SlurryCupTM and Grit SnailTM.

- Gravity Sludge Thickener No 3 – Construction of one new gravity sludge thickener basin with a 50 ft diameter and 12 ft sidewater depth to store and thicken 15 lb/ft^2/day of solids. Gravity Sludge Thickener No 3 will be installed along the 2 existing units. A third gravity thickener is required for the thickening system to operate within the recommended ranges for solids and hydraulic loading rates during maximum week conditions. Scum will flow by means of thickener scum pump to the existing scum concentrator. Supernatant will flow to the primary influent piping. Sludge will flow to the thickened sludge pumps to be pumped to the Belt Filter Presses.

- Sludge Belt Filter Press –
  - Thickened Sludge Pump No 4 – The installation of one new Thickened Sludge Pump (TSP) No 4 will accompany 3 existing thickened sludge pumps. TSP No 4

will be a vertical vortex torque flow type capable of 100 gpm at 80 ft TDH with a 15 HP motor. The TSP No 4 and 3 existing pumps are utilized to pump sludge from the Gravity Sludge Thickeners to the Belt Filter Presses.

- Belt Filter Press No 3 – Installation of one, 2.2 m wide, Alpha Laval AS-H Winklepress High Solids Belt Filter Press will establish Belt Filter Press No 3 as a parallel unit along 2 existing belt filter presses. The maximum solids loading rate of 186 lbs/hr-ft will deliver a minimum dewatered solids concentration of 22%. The dewatered sludge is transported to the loading bay by means of sludge conveyors.
- Sludge Conveyors – Installation of one sludge cake conveyor and sludge cake chute to transport dewatered sludge from the belt filter presses to the Cake Storage Hopper No 3.
- Cake Storage Hopper No 3 – A Cake Storage Hopper No 3 (CSH3) is specified as a Schwing Bioset to match the 2 existing cake bins. A screw conveyor will allow discharge of dewatered sludge cake from either Belt Filter Press 2 or 3 to be transferred to either CSH2 or CSH3 for additional operational flexibility. The new CSH3 will have a leveler that will allow 54 cubic yards of cake to be stored.

- Treatment Facility Odor Control – The new Treatment Facility Odor Control includes 3 separate treatment trains with each train having a biotower humidifier followed by a concrete biofilter cell with recirculation pumps. The system is designed for the new air flow rate of 31,645 cfm from 30 different plant areas. The new sytem will include 3 humidifiers and 3 Biofilter cells to treat an average inlet H_2S Concentration of 0.1 ppmv with a removal efficiency of 99%. This translates into an odor removal efficiency of 80%.

- Trickling Filter Demolition – The Trickling filters being utilized in the Phase I plant will be demolished in its entirety during the Phase II construction. Structure will be removed to 3 feet under ground and any remaining piping will be plugged. Prior to demolition, please submit a Closure Plan to the Saint Louis Regional Office for approval prior to demolition according to 10 CSR 20-6.010(12).

- Existing Secondary Clarifier Demolition – The two existing secondary clarifiers utilized in the Phase I plant will be demolished in its entirety during the Phase II construction. Structure will be removed to 3 feet undergroung and remaining piping will be demolished and plugged. Prior to demolition, please submit a Closure Plan to the Saint Louis Regional Office for approval prior to demolition according to 10 CSR 20-6.010(12).

6. OPERATING PERMIT

Operating permit MO-0127949 will require a modification to reflect the construction activities. The modified MSD, Lower Meramec WWTF, MO-0127949, was successfully public noticed from October 29, 2021 to November 29, 2021 with no comments received. Upon the completion of construction, submit the Statement of Work Completed to the Department in accordance with 10 CSR 20-6.010(5)(N) and request the operating permit modification be issued.

With your CP application, an operating permit modification was submitted for public notice to reflect the change in your operating permit. Your operating permit application for a renewal will be due before your CP is expired. The modification action does not fulfill the renewal application obligation. A renewal application must be filed before July 4, 2022.

This facility does not meet the requirements of the MOGD00000 issued on July 1, 2019 due to a design flow above 50,000 gpd and POTW classification. This facility is not being converted to a general operating permit at this time, it will be evaluated at operating permit renewal to determine if it qualifies for any applicable general operating permit.

V. NOTICE OF RIGHT TO APPEAL

If you were adversely affected by this decision, you may be entitled to an appeal before the Administrative Hearing Commission (AHC) pursuant to Section 621.250 RSMo. To appeal, you must file a petition with the AHC within 30 days after the date this decision was mailed or the date it was delivered, whichever date was earlier. If any such petition is sent by registered mail or certified mail, it will be deemed filed on the date it is mailed; if it is sent by any method other than registered mail or certified mail, it will be deemed filed on the date it is received by the AHC. Any appeal should be directed to:

Administrative Hearing Commission
U.S. Post Office Building, Third Floor
131 West High Street, P.O. Box 1557
Jefferson City, MO 65102-1557
Phone: 573-751-2422
Fax: 573-751-5018
Website: https://ahc.mo.gov

Steven Hamm, P.E.
Engineering Section
Steven.hamm@dnr.mo.gov

Appendix A: Process Flow Diagram
Appendix B: Cost Analysis for Compliance

Appendix A: Process Flow Diagram

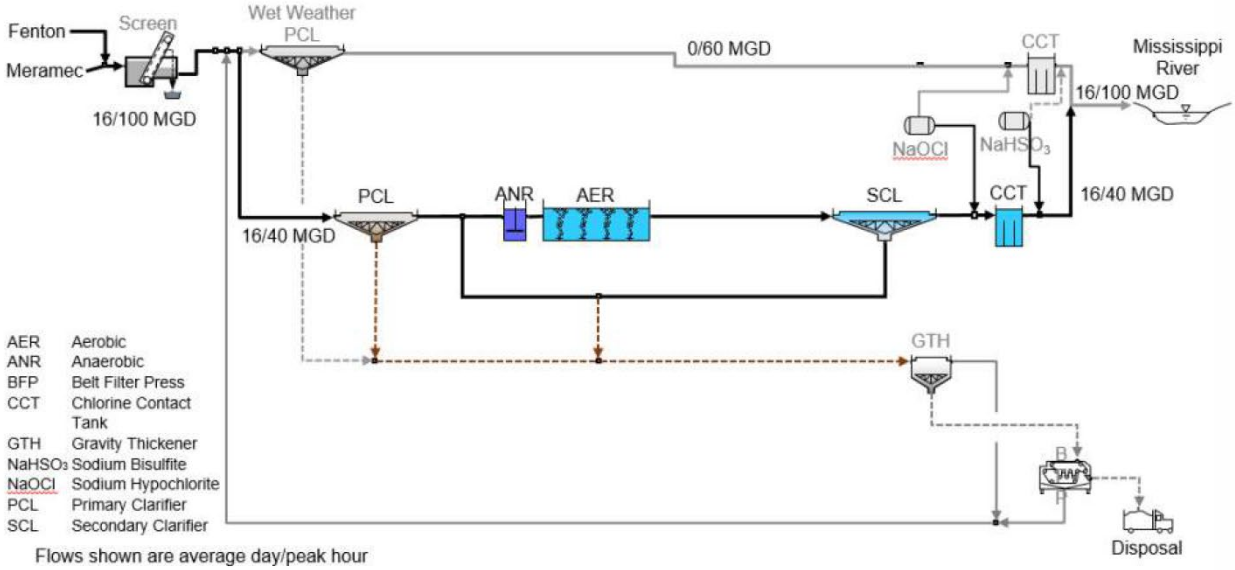

Appendix B: Cost Analysis for Compliance

Missouri Department of Natural Resources
Water Protection Program
Cost Analysis for Compliance
(In accordance with RSMo 644.145)

MSD, Lower Meramec WWTF, Permit Modification
The Metropolitan St. Louis Sewer District
Missouri State Operating Permit #MO-0127949

Section 644.145 RSMo requires the Department of Natural Resources (Department) to make a "finding of affordability" when "issuing permits under" or "enforcing provisions of" state or federal clean water laws "pertaining to any portion of a combined or separate sanitary sewer system for publicly-owned treatment works." This cost analysis does not dictate that the permittee will upgrade their facility, or how the permittee will comply with new permit requirements. The results of this analysis are used to determine an adequate compliance schedule for the permit that may mitigate the financial burden of new permit requirements.

New Permit Requirements
The permit requires compliance with new effluent limitations for $CBOD_5$, TSS, $CBOD_5$ percent removal, TSS percent removal, and TRC as a result of the Water Quality and Antidegradation Review that incorporates the Phase II Expansion of the facility. The cost assumptions in this analysis anticipate the modification of the existing treatment facility as described in the construction permit application received on August 19, 2021. For this analysis, the Department has evaluated the mechanical treatment technology that could be the most practical solution to meet the new requirements for the community.

The permit also requires compliance with new monitoring requirements for Total Kjeldahl Nitrogen, Ammonia as N, Nitrate + Nitrite, and Total Phosphorus.

Flow and Connections
The size of the facility evaluated for upgrades was chosen based on the expanded design flow of 16 MGD. If significant population growth is expected in the community, or if a significant portion of the flow is due to inflow and infiltration, then the flows and resulting estimated costs used in a facility plan prepared by a consulting engineer may differ. The number of connections was reported by the permittee on the operating permit modification application.

Flow Evaluated: 16,000,000 gallons per day	
Connection Type	**Number**
Residential	33,126
Commercial	2,043
Industrial	7
Facility Total	**35,176**

Data Collection for this Analysis
This cost analysis is based on data available to the Department as provided by the permittee and data obtained from readily available sources. The Metropolitan St. Louis Sewer District's (MSD) provided a financial questionnaire, facility plan with opinions of probable construction costs, and annual financial reports to present MSD's financial and socioeconomic situation. If certain data was not provided by the permittee to the Department and the data is not obtainable through readily available sources, this analysis will state that the information is "unknown".

The Department received the Metropolitan St. Louis Sewer District Lower Meramec WWTF Expansion Phase II dated June 25, 2020. Section 17 and Appendices 4-11 present Opinions of Probable Construction Costs for the scope of construction associated with the Phase II expansion. Cost Estimations from the subject Facility Plan were used to support this Cost Analysis for Compliance.

Eight Criteria of 644.145 RSMo
The Department must consider the eight (8) criteria presented in subsection 644.145 RSMo to evaluate the cost associated with new permit requirements.

(1) A community's financial capability and ability to raise or secure necessary funding;

Criterion 1 Table. Current Financial Information for The Metropolitan St. Louis Sewer District	
Current Monthly User Rates per 5,000 gallons*	$50.70
Municipal Bond Rating (if applicable)	Moody Aa1, Standard & Poor AAA
Bonding Capacity**	$2,636,349,911
Median Household Income (MHI)[2]	$68,252
Current Annual Operating Costs (excludes depreciation)	$180,687,858
Current Outstanding Debt for the Sewer District	$1,690,334,911
Amount within the Current User Rate Used toward Payments on Outstanding Debt Related to the Current Wastewater Infrastructure	$12.68

* User Rates were obtained from the Financial Questionnaire.
** General Obligation Bond capacity allowed by constitution: Cities = up to 20% of taxable tangible property; Sewer districts or villages = up to 5% of taxable tangible property

(2) Affordability of pollution control options for the individuals or households at or below the median household income level of the community;

This facility operates as part of a sewer district. A sewer district provides public utilities to residents of that district; therefore, it may structure rates in ways that fund: (1) the facility in which the user is connected to and (2) all facilities contained in the sewer district. As a result, without detailed information about the sewer district's rate structure, the Department is unable to determine how the costs associated with the operation, maintenance, sampling, and compliance of permit requirements are divided amongst all users within the sewer district. Therefore, the Department cannot determine the future rates for the members of the sewer district based on the estimated costs to upgrade the MSD, Lower Meramec WWTF. Also, because the service jurisdiction of the geographical area of which the sewer district serves can vary, the correct MHI of users within this sewer district's service area cannot be determined using the data from the U.S. Census Bureau. This is because the MHI of a sewer district's service area is not based on data from a single city, village, or town.

The cost estimates located within this document are for the construction of a brand new treatment facility or system that is the most practical to facilitate compliance with new permit requirements.

Cost Estimate Assumptions:
- Total Present Worth includes a three percent interest rate to construct and perform annual operation and maintenance of the new treatment plant over the term of the loan, which is 20 years for the mechanical plant option.
- Capital Cost includes design, construction, inspection, and contingency costs that were obtained from the Facility Plan for the Phase II Expansion.

Mechanical Plant Pollution Control Option Cost Estimates:
For the mechanical plant option, the Department has estimated costs for an activated sludge treatment facility. Treatment technologies were selected that meet the following monthly average effluent limits:
- *E. coli* of 206 colony forming units per 100 mL as a Monthly Average Maximum
- Carbonaceous Biochemical Oxygen Demand ($CBOD_5$) of 25 mg/L as a Monthly Average Maximum
- Total Suspended Solids (TSS) of 30 mg/L as a Monthly Average Maximum

- TSS Percent Removal and $CBOD_5$ Percent Removal of 85% as a Monthly Average Minimum
- Total Residual Chlorine of 219 g/L as a Monthly Average Maximum

Sludge handling and sludge treatment are included in the capital, operations, maintenance, and present worth cost estimations. New sampling costs are also included in the following cost estimations.

Criterion 2A Table. Estimated Costs for Mechanical Plant Pollution Control Option		
(1)	Estimated Total Present Worth	unknown
	Estimated Capital Cost	$102,100,000
	Estimated Annual Cost of Operation and Maintenance	unknown
	Estimated Annual Cost of New Sampling Requirements	$1,308
(2)	Total Monthly User Cost	*
	Total Monthly User Cost as a Percent of Median Household Income[3]	*

*Because this facility is owned by a sewer district, the Department cannot calculate a user cost or the user cost as a percentage of MHI. This cost analysis will be completed without the estimated monthly user cost as a percent of median household income.

(3) An evaluation of the overall costs and environmental benefits of the control technologies;

An investment in wastewater treatment will provide several social, environmental, and economic benefits. Improved wastewater provides benefits such as avoided health costs due to water-related illness, enhanced environmental ecosystem quality, and improved natural resources. The preservation of natural resources has been proven to increase the economic value and sustainability of the surrounding communities. Maintaining Missouri's water quality standards fulfills the goal of restoring and maintaining the chemical, physical, and biological integrity of the receiving stream; and, where attainable, it achieves a level of water quality that provides for the protection and propagation of fish, shellfish, wildlife, and recreation in and on the water.

Total Ammonia Nitrogen Treatment
Ammonia can be toxic to aquatic life. Fish may suffer a loss of equilibrium, hyperexcitability, increased respiratory activity and oxygen uptake, and increased heart rate. At extreme ammonia levels, fish may experience convulsions, coma, and death. Native fish and other native aquatic life are extremely important to Missouri's ecosystem. They contribute essential nutrients to the streams, rivers, lakes, pond other waters in which they inhabit. Freshwater ecosystems are important for human survival, in that it provides a majority of people's drinking water. Also, a pristine freshwater ecosystem with an abundance of aquatic life can increase the community's overall income of revenue. Revenue to businesses and sales tax revenue is increased as the natural amenity will attract fisherman and tourism to the area. Fish and other aquatic life also provide a source of low cost sustenance for the people within the surrounding communities. Final water quality-based effluent limits for total ammonia nitrogen is a requirement of this permit. A schedule of compliance is given with the final limits so that the permittee has time to secure funding and update their treatment plant, if necessary. Further information can be found in the Water Protection Program fact sheet titled "Changes to the Water Quality Standard for Ammonia" at https://dnr.mo.gov/document-search/ammonia-criteria-new-epa-recommended-criteria-pub2481/pub2481.

Disinfection
E. coli is a species of bacteria that normally live in the intestines of humans and warm-blooded animals. While some strains of *E. coli* are harmless, there are several strains that can cause severe diarrhea, abdominal cramps, and severe kidney failure. The people most susceptible to these consequences are young children, the elderly, and those with weakened immune systems. The receiving stream that this facility discharges to contains the WBC-B designated use to protect human health in accordance with Water Quality Standards (10 CSR 20-7.031) and the Clean Water Act. The disinfection of wastewater effluent benefits human health by reducing exposure to disease-causing bacteria, such as *E.coli*, and viruses and reducing health care costs to those infected by contaminated water. The construction and installation of a disinfection system at the treatment facility will protect human health as well as meet water quality standards.

(4) Inclusion of ongoing costs of operating and maintaining the existing wastewater collection and treatment system, including payments on outstanding debts for wastewater collection and treatment systems when calculating projected rates:

The Sewer District reported that their outstanding debt for their current wastewater collection and treatment systems is $1,690,334,911. The Sewer District reported that each user pays $50.70 monthly, of which, $12.68 is used toward payments on the current outstanding debt.

(5) An inclusion of ways to reduce economic impacts on distressed populations in the community, including but not limited to low and fixed income populations. This requirement includes but is not limited to:

(a) Allowing adequate time in implementation schedules to mitigate potential adverse impacts on distressed populations resulting from the costs of the improvements and taking into consideration local community economic considerations.
(b) Allowing for reasonable accommodations for regulated entities when inflexible standards and fines would impose a disproportionate financial hardship in light of the environmental benefits to be gained.

The following table characterizes the current overall socioeconomic condition of the community as compared to the overall socioeconomic condition of Missouri. The following information was compiled using the latest U.S. Census data.

Criterion 5 Table. Socioeconomic Data [2-7] for the St. Louis County

No.	Administrative Unit	St. Louis County	Missouri State	United States
1	Population (2019)	996,919	6,104,910	324,697,795
2	Percent Change in Population (2000-2019)	-1.9%	9.1%	15.4%
3	2019 Median Household Income (in 2020 Dollars)	$68,252	$56,145	$63,618
4	Percent Change in Median Household Income (2000-2019)	-13.1%	-4.7%	-2.5%
5	Median Age (2019)	40.3	38.6	38.1
6	Change in Median Age in Years (2000-2019)	2.8	2.5	2.8
7	Unemployment Rate (2019)	4.7%	4.6%	5.3%
8	Percent of Population Below Poverty Level (2019)	9.7%	13.7%	13.4%
9	Percent of Household Received Food Stamps (2019)	8.3%	11.1%	11.7%

(6) An assessment of other community investments and operating costs relating to environmental improvements and public health protection;

MSD currently operates under a Consent Decree, with an effective date of April 27, 2012 that was entered into between the United States of America, the Missouri Coalition for the Environment Foundation, and MSD. The Consent Decree outlines specific requirements for remedial measures and corresponding schedules of compliance. In August of 2011, the Department of Justice filed a settlement requiring MSD to spend a minimum of $4.7 billion over the next 23 years to address overflows and other system improvements.

(7) An assessment of factors set forth in the United States Environmental Protection Agency's guidance, including but not limited to the "Combined Sewer Overflow Guidance for Financial Capability Assessment and Schedule Development" that may ease the cost burdens of implementing wet weather

control plans, including but not limited to small system considerations, the attainability of water quality standards, and the development of wet weather standards;

The secondary indicators for consideration are not applicable for sewer districts as the indicators are structured for the financial capability of a municipality. The financial impact of the new requirements is determined using all available data for the sewer district.

(8) An assessment of any other relevant local community economic conditions.

The Sewer District did not report any other relevant local economic conditions.

CONCLUSION AND FINDING

As a result of new regulations, the Department is proposing modifications to the current operating permit that may require the permittee to incorporate effluent limits identified in the Water Quality and Antidegradation Review dated April 2020 which incorporates the Phase II expansion of the MSD, Lower Meramec WWTF. The Department has considered the eight (8) criteria presented in subsection 644.145 RSMo to evaluate the cost associated with the new permit requirements.

The Department is committed to reassessing the cost analysis for compliance at renewal to determine if the initial schedule of compliance will accommodate the socioeconomic data and financial capability of the community at that time. Because each community is unique, the Department wants to make sure that each community has the opportunity to consider all options and tailor solutions to best meet their needs. The Department understands the economic challenges associated with achieving compliance, and is committed to using all available tools to make an accurate and practical finding of affordability for Missouri communities. If the community is interested in the funding options available to them, please contact the Financial Assistance Center for more information (https://dnr.mo.gov/water/business-industry-other-entities/financial-opportunities/financial-assistance-center).

This determination is based on readily available data and may overestimate the financial impact on the community. The community's facility plan that is submitted as a part of the construction permit process includes a discussion of community details, what the community can afford, existing obligations, future growth potential, an evaluation of options available to the community with cost information, and a discussion on no-discharge alternatives. The cost information provided through the facility plan process, which is developed by the community and their engineer, is more comprehensive of the community's individual factors in relation to selected treatment technology and costing information.

References

1. http://www.hydromantis.com/
2. 2019 MHI in 2019 Dollar: United States Census Bureau. 2015-2019 American Community Survey 5-Year Estimates, Table B19013: Median Household Income in the Past 12 Months (in 2019 Inflation-Adjusted Dollars). https://data.census.gov/cedsci/table?q=B19013&g=0400000US29.160000&tid=ACSDT5Y2019.B19013&hidePreview=false.
   (B) 2000 MHI in 1999 Dollar: (1) For United States, United States Census Bureau (2003) 2000 Census of Population and Housing, Summary Social, Economic, and Housing Characteristics, PHC-2-1 Part 1. United States Summary, Table 5. Work Status and Income in 1999: 2000, Washington, DC. https://www.census.gov/prod/cen2000/phc-2-1-pt1.pdf.
   (2) For Missouri State, United States Census Bureau (2003) 2000 Census of Population and Housing, Summary Social, Economic, and Housing Characteristics, PHC-2-27, Missouri, Table 10. Work Status and Income in 1999: 2000, Washington, DC. https://www.census.gov/prod/cen2000/phc-2-27-pt1.pdf.
   (C) 2020 CPI, 2019 CPI and 1999 CPI: U.S. Department of Labor Bureau of Labor Statistics (2020) Consumer Price Index - All Urban Consumers, U.S. City Average. All Items. 1982-84=100. https://data.bls.gov/pdq/SurveyOutputServlet.
   (D) 2019 MHI in 2020 Dollar = 2019 MHI in 2019 Dollar x 2020 CPI /2019 CPI; 2000 MHI in 2020 Dollar = 2000 MHI in 1999 Dollar x 2020 CPI /1999 CPI.
   (E) Percent Change in Median Household Income (2000-2019) = (2019 MHI in 2020 Dollar - 2000 MHI in 2020 Dollar) / (2000 MHI in 2020 Dollar).
3. Total Population in 2019: United States Census Bureau. 2015-2019 American Community Survey 5-Year Estimates, Table B01003: Total Population - Universe: Total Population. https://data.census.gov/cedsci/table?q=B01003&g=0400000US29.160000&tid=ACSDT5Y2019.B01003&hidePreview=false.
   (B) Total Population in 2000: (1) For United States, United States Census Bureau (2002) 2000 Census of Population and Housing, Summary Social, Economic, and Housing Characteristics, PHC-1-1 Part 1. United States Summary, Table 1. Age and Sex: 2000, Washington, DC. https://www.census.gov/prod/cen2000/phc-1-1-pt1.pdf.

(2) For Missouri State, United States Census Bureau (2002) 2000 Census of Population and Housing, Summary Population and Housing Characteristics, PHC-1-27, Missouri, Table 2. Place of Birth, Residence in 1995, and Language: 2000, Washington, DC. http://www.census.gov/prod/cen2000/phc-2-27-pt1.pdf.

(C) Percent Change in Population (2000-2019) = (Total Population in 2019 - Total Population in 2000) / (Total Population in 2000).

4. Median Age in 2019: United States Census Bureau. 2015-2019 American Community Survey 5-Year Estimates, Table B01002: Median Age by Sex - Universe: Total population. https://data.census.gov/cedsci/table?q=B01002&g=0400000US29.160000&tid=ACSDT5Y2019.B01002&hidePreview=false.

   (B) Median Age in 2000: (1) For United States, United States Census Bureau (2002) 2000 Census of Population and Housing, Summary Social, Economic, and Housing Characteristics, PHC-1-1 Part 1. United States Summary, Table 1. Age and Sex: 2000, Washington, DC., Page 2. https://www.census.gov/prod/cen2000/phc-1-1-pt1.pdf.

   (2) For Missouri State, United States Census Bureau (2002) 2000 Census of Population and Housing, Summary Population and Housing Characteristics, PHC-1-27, Missouri, Table 2. Place of Birth, Residence in 1995, and Language: 2000, Washington, DC. http://www.census.gov/prod/cen2000/phc-2-27-pt1.pdf.

   (C) Change in Median Age in Years (2000-2019) = (Median Age in 2019 - Median Age in 2000).

5. United States Census Bureau. 2015-2019 American Community Survey 5-Year Estimates, B23025: Employment Status for the Population 16 Years and Over - Universe: Population 16 years and Over. https://data.census.gov/cedsci/table?q=B23025&g=0400000US29.160000&tid=ACSDT5Y2019.B23025&hidePreview=false.

6. United States Census Bureau. 2015-2019 American Community Survey 5-Year Estimates, Table S1701: Poverty Status in the Past 12 Months. https://data.census.gov/cedsci/table?q=S1701&g=0400000US29.160000&tid=ACSST5Y2019.S1701&hidePreview=false.

7. United States Census Bureau. 2015-2019 American Community Survey 5-Year Estimates, Table B2201: Food Stamps/Supplemental Nutrition Assistance Program (SNAP) - Universe: Households. https://data.census.gov/cedsci/table?q=Receipt%20of%20Food%20Stamps&g=0400000US29.050000,29.160000&tid=ACSST5Y2019.S2201&hidePreview=true.

MISSOURI DEPARTMENT OF NATURAL RESOURCES
WATER PROTECTION PROGRAM

APPLICATION FOR CONSTRUCTION PERMIT – WASTEWATER TREATMENT FACILITY

FOR DEPARTMENT USE ONLY	
APP NO.	CP NO.
FEE RECEIVED	CHECK NO.
DATE RECEIVED	

APPLICATION OVERVIEW

The Application for Construction Permit – Wastewater Treatment Facility form has been developed in a modular format and consists of Part A and B. **All applicants must complete Part A.** Part B should be completed for applicants who currently land-apply wastewater or propose land application for wastewater treatment. **Please read the accompanying instructions before completing this form. Submittal of an incomplete application may result in the application being returned.**

PART A – BASIC INFORMATION

1.0 APPLICATION INFORMATION (Note – If any of the questions in this section are answered NO, this application may be considered incomplete and returned.)

1.1 Is this a Federal/State funded project? ☐ YES ☑ N/A Funding Agency: _____ Project #: _____

1.2 Has the Missouri Department of Natural Resources approved the proposed project's antidegradation review?
☑ YES Date of Approval: 5/1/20 ☐ N/A

1.3 Has the department approved the proposed project's facility plan*?
☑ YES Date of Approval: 9/9/20 ☐ NO (If No, complete No. 1.4.)

1.4 [Complete only if answered No on No. 1.3.] Is a copy of the facility plan* for wastewater treatment facilities included with this application?
☐ YES ☐ NO ☐ Exempt because _____

1.5 Is a copy of the appropriate plans* and specifications* included with this application?
☑ YES Denote which form is submitted: ☑ Hard copy ☑ Electronic copy (See instructions.) ☐ NO

1.6 Is a summary of design* included with this application? ☑ YES ☐ NO

1.7 Has the appropriate operating permit application (A, B, or B2) been submitted to the department?
☑ YES Date of submittal: 8/17/20
☐ Enclosed is the appropriate operating permit application and fee submittal. Denote which form: ☐ A ☐ B ☐ B2
☐ N/A: However, In the event the department believes that my operating permit requires revision to permit limitation such as changing equivalent to secondary limits to secondary limits or adding total residual chlorine limits, please share a draft copy prior to public notice? ☐ YES ☐ NO

1.8 Is the facility currently under enforcement with the department or the Environmental Protection Agency? ☑ YES ☐ NO

1.9 Is the appropriate fee or JetPay confirmation included with this application? ☑ YES ☐ NO
See Section 7.0

* Must be affixed with a Missouri registered professional engineer's seal, signature and date.

2.0 PROJECT INFORMATION

2.1 NAME OF PROJECT	2.2 ESTIMATED PROJECT CONSTRUCTION COST
Lower Meramec WWTF Expansion Phase II (12255-015.1)	$ 117,000,000

2.3 PROJECT DESCRIPTION

Expansion of the Lower Meramec WWTF: 3-72" Fine Screens each @ 63 mgd, 2-Primary Clarifiers each @ 20 mgd, 4-Aeration Basins each @ 10 mgd+RAS, 3-Secondary Clarifiers each @ 15 mgd+RAS, and 2-Chlorine Contact Basins each @ 30 mgd.

2.4 SLUDGE HANDLING, USE AND DISPOSAL DESCRIPTION

Grit removal of primary sludge and WAS, followed by gravity thickening, followed by belt filter press and cake hopper to be hauled for subsequent incineration or landfilling.

2.5 DESIGN INFORMATION

A. Current population: 120,544; Design population: 160,000

B. Actual Flow: 14 mgd Design Average Flow: 16 mgd
Actual Peak Daily Flow: 78 mgd Design Maximum Daily Flow: 89.4 mgd Design Wet Weather Event: 100 mgd

2.6 ADDITIONAL INFORMATION

A. Is a topographic map attached? ☑ YES ☐ NO

B. Is a process flow diagram attached? ☑ YES ☐ NO

3.0 WASTEWATER TREATMENT FACILITY

NAME	TELEPHONE NUMBER WITH AREA CODE	E-MAIL ADDRESS
MSD-Lower Meramec Wastewater Treatment Facility	314-335-2045	cxpfeu@stlmsd.com

ADDRESS (PHYSICAL)	CITY	STATE	ZIP CODE	COUNTY
7849 Fine Road	Saint Louis	MO	63129	St. Louis

Wastewater Treatment Facility: Mo- 0127949 (Outfall 001 Of 3)

3.1 Legal Description: _____ ¼, _____ ¼, _____ ¼, Sec. 34, T 43N, R 6E
(Use additional pages if construction of more than one outfall is proposed.)

3.2 UTM Coordinates Easting (X): 732203 Northing (Y): 4252722
For Universal Transverse Mercator (UTM), Zone 15 North referenced to North American Datum 1983 (NAD83)

3.3 Name of receiving streams: Mississippi River

4.0 PROJECT OWNER

NAME	TELEPHONE NUMBER WITH AREA CODE	E-MAIL ADDRESS
Metropolitan St. Louis Sewer District	314-768-6200	blhoel@stlmsd.com

ADDRESS	CITY	STATE	ZIP CODE
2350 Market Street	Saint Louis	MO	63103

5.0 CONTINUING AUTHORITY: A continuing authority is a company, business, entity or person(s) that will be operating the facility and/or ensuring compliance with the permit requirements.

NAME	TELEPHONE NUMBER WITH AREA CODE	E-MAIL ADDRESS
Same as above		

ADDRESS	CITY	STATE	ZIP CODE

5.1 A letter from the continuing authority, if different than the owner, is included with this application. ☐ YES ☐ NO ☑ N/A

5.2 COMPLETE THE FOLLOWING IF THE CONTINUING AUTHORITY IS A MISSOURI PUBLIC SERVICE COMMISSION REGULATED ENTITY.

A. Is a copy of the certificate of convenience and necessity included with this application? ☐ YES ☐ NO

5.3 COMPLETE THE FOLLOWING IF THE CONTINUING AUTHORITY IS A PROPERTY OWNERS ASSOCIATION.

A. Is a copy of the as-filed restrictions and covenants included with this application? ☐ YES ☐ NO

B. Is a copy of the as-filed warranty deed, quitclaim deed or other legal instrument which transfers ownership of the land for the wastewater treatment facility to the association included with this application? ☐ YES ☐ NO

C. Is a copy of the as-filed legal instrument (typically the plat) that provides the association with valid easements for all sewers included with this application? ☐ YES ☐ NO

D. Is a copy of the Missouri Secretary of State's nonprofit corporation certificate included with this application? ☐ YES ☐ NO

6.0 ENGINEER

ENGINEER NAME / COMPANY NAME	TELEPHONE NUMBER WITH AREA CODE	E-MAIL ADDRESS
Douglas Hickey - HDR	314-425-8318	doug.hickey@hdrinc.com

ADDRESS	CITY	STATE	ZIP CODE
401 South 18th Street, Suite 300	Saint Louis	MO	63103

7.0 APPLICATION FEE

☑ CHECK NUMBER 229908 ☐ JETPAY CONFIRMATION NUMBER

8.0 PROJECT OWNER: I certify under penalty of law that this document and all attachments were prepared under my direction or supervision in accordance with a system designed to assure that qualified personnel properly gather and evaluate the information submitted. Based on my inquiry of the person or persons who manage the system, or those persons directly responsible for gathering the information, the information submitted is, to the best of my knowledge and belief, true, accurate, and complete. I am aware that there are significant penalties for submitting false information, including the possibility of fine and imprisonment for knowing violations.

PROJECT OWNER SIGNATURE

PRINTED NAME	DATE
Brad Nevois	August 18, 2021

TITLE OR CORPORATE POSITION	TELEPHONE NUMBER WITH AREA CODE	E-MAIL ADDRESS
Assistant Director of Engineering	314-768-2731	blnevo@stlmsd.com

Mail completed copy to: MISSOURI DEPARTMENT OF NATURAL RESOURCES
WATER PROTECTION PROGRAM
P.O. BOX 176
JEFFERSON CITY, MO 65102-0176

END OF PART A.
REFER TO THE APPLICATION OVERVIEW TO DETERMINE WHETHER PART B NEEDS TO BE COMPLETE.