STATE OF MISSOURI

DEPARTMENT OF NATURAL RESOURCES

MISSOURI CLEAN WATER COMMISSION

MISSOURI STATE OPERATING PERMIT

In compliance with the Missouri Clean Water Law, (Chapter 644 R.S. Mo. as amended, hereinafter, the Law), and the Federal Water Pollution Control Act (Public Law 92-500, 92nd Congress) as amended,

Permit No.	MO-0132322
Owner:	The Cottages Homeowner's Association
Address:	P.O. Box 842, Shell Knob, MO 65747
Continuing Authority:	Same as above
Address:	Same as above
Facility Name:	The Cottages at Table Rock Lake Wastewater Treatment Facility
Facility Address:	0.06 mi SW of 12 Green Cottage Drive, Shell Knob, MO 65747
Legal Description:	Sec. 16, T22N, R24W, Stone County
UTM Coordinates:	X = 451391, Y = 4051740
Receiving Stream:	Tributary to Table Rock Lake
First Classified Stream and ID:	Table Rock Lake (L2) (7313) 303(d) List
USGS Basin & Sub-watershed No.:	(11010001-1204)

is authorized to discharge from the facility described herein, in accordance with the effluent limitations and monitoring requirements as set forth herein:

FACILITY DESCRIPTION

Outfall #001 – Non-POTW – Residential Subdivision – SIC #8641
Recirculating sand filter / chemical addition to facilitate phosphorous removal / chlorination / dechlorination / sludge disposal by contract hauler
Design population equivalent is 58.
Design flow is 5,800 gallons per day.
Actual flow is 655 gallons per day.
Design sludge production is 0.57 dry tons/year.

This permit authorizes only wastewater discharges under the Missouri Clean Water Law and the National Pollutant Discharge Elimination System; it does not apply to other regulated areas. This permit may be appealed in accordance with Section 621.250 RSMo, Section 640.013 RSMo and Section 644.051.6 of the Law.

August 1, 2018
Effective Date

Edward B. Galbraith, Director, Division of Environmental Quality

July 31, 2023
Expiration Date

Chris Wieberg, Director, Water Protection Program

OUTFALL #001	**TABLE A-1. INTERIM EFFLUENT LIMITATIONS AND MONITORING REQUIREMENTS**

The permittee is authorized to discharge from outfall(s) with serial number(s) as specified in the application for this permit. The interim effluent limitations shall become effective on **August 1, 2018** and remain in effect through **July 31, 2019**. Such discharges shall be controlled, limited and monitored by the permittee as specified below:

EFFLUENT PARAMETER(S)	UNITS	INTERIM EFFLUENT LIMITATIONS			MONITORING REQUIREMENTS	
		DAILY MAXIMUM	WEEKLY AVERAGE	MONTHLY AVERAGE	MEASUREMENT FREQUENCY	SAMPLE TYPE
Flow	MGD	*		*	once/quarter***	24 hr. estimate
Biochemical Oxygen Demand$_5$	mg/L		30	20	once/quarter***	grab
Total Suspended Solids	mg/L		30	20	once/quarter***	grab
E. coli (Note 1, Page 4)	#/100mL	630		126	once/quarter***	grab
Ammonia as N	mg/L	*		*	once/quarter***	grab
Total Residual Chlorine (Note 2, Page 4)	µg/L	< 130		< 130	once/quarter***	grab
Total Phosphorous as P	mg/L	*		0.5	once/quarter***	grab
Aluminum, Total Recoverable (Note 3, Page 4)	mg/L	*		*	once/quarter***	grab
Iron, Total Recoverable (Note 3, Page 4)	mg/L	*		*	once/quarter***	grab

MONITORING REPORTS SHALL BE SUBMITTED QUARTERLY; THE FIRST REPORT IS DUE OCTOBER 28, 2018. THERE SHALL BE NO DISCHARGE OF FLOATING SOLIDS OR VISIBLE FOAM IN OTHER THAN TRACE AMOUNTS.

EFFLUENT PARAMETER(S)	UNITS	MINIMUM		MAXIMUM	MEASUREMENT FREQUENCY	SAMPLE TYPE
pH – Units**	SU	6.5		9.0	once/quarter***	grab

MONITORING REPORTS SHALL BE SUBMITTED QUARTERLY; THE FIRST REPORT IS DUE OCTOBER 28, 2018.

* Monitoring requirement only.
** pH is measured in pH units and is not to be averaged.
*** See table below for quarterly sampling.

Quarterly Minimum Sampling Requirements				
Quarter	**Months**	***E. coli* and Total Residual Chlorine (TRC)**	**All Other Parameters**	**Report is Due**
First	January, February, March	Not required to sample.	Sample at least once during any month of the quarter	April 28th
Second	April, May, June	Sample at least once during any month of the quarter	Sample at least once during any month of the quarter	July 28th
Third	July, August, September	Sample at least once during any month of the quarter	Sample at least once during any month of the quarter	October 28th
Fourth	October	**Sample once during October**	Sample at least once during any month of the quarter	January 28th
	November & December	Not required to sample.		

OUTFALL #001	**TABLE A-2. FINAL EFFLUENT LIMITATIONS AND MONITORING REQUIREMENTS**

The permittee is authorized to discharge from outfall(s) with serial number(s) as specified in the application for this permit. The final effluent limitations shall become effective on **August 1, 2019** and remain in effect until expiration of the permit. Such discharges shall be controlled, limited and monitored by the permittee as specified below:

EFFLUENT PARAMETER(S)	UNITS	FINAL EFFLUENT LIMITATIONS			MONITORING REQUIREMENTS	
		DAILY MAXIMUM	WEEKLY AVERAGE	MONTHLY AVERAGE	MEASUREMENT FREQUENCY	SAMPLE TYPE
Flow	MGD	*		*	once/quarter***	24 hr. estimate
Biochemical Oxygen Demand$_5$	mg/L		30	20	once/quarter***	grab
Total Suspended Solids	mg/L		30	20	once/quarter***	grab
E. coli (Note 1, Page 4)	#/100mL	630		126	once/quarter***	grab
Ammonia as N (Apr 1 – Sep 30) (Oct 1 – Mar 31)	mg/L	* 12.1		* 2.4	once/quarter***	grab
Total Residual Chlorine (Note 2, Page 4)	µg/L	< 130		< 130	once/quarter***	grab
Total Phosphorous as P	mg/L	*		0.5	once/quarter***	grab
Aluminum, Total Recoverable (Note 3, Page 4)	mg/L	*		*	once/quarter***	grab
Iron, Total Recoverable (Note 3, Page 4)	mg/L	*		*	once/quarter***	grab

MONITORING REPORTS SHALL BE SUBMITTED QUARTERLY; THE FIRST REPORT IS DUE OCTOBER 28, 2019. THERE SHALL BE NO DISCHARGE OF FLOATING SOLIDS OR VISIBLE FOAM IN OTHER THAN TRACE AMOUNTS.

EFFLUENT PARAMETER(S)	UNITS	MINIMUM		MAXIMUM	MEASUREMENT FREQUENCY	SAMPLE TYPE
pH – Units**	SU	6.5		9.0	once/quarter***	grab

MONITORING REPORTS SHALL BE SUBMITTED QUARTERLY; THE FIRST REPORT IS DUE OCTOBER 28, 2019.

* Monitoring requirement only.
** pH is measured in pH units and is not to be averaged.
*** See table below for quarterly sampling.

Quarterly Minimum Sampling Requirements				
Quarter	**Months**	***E. coli* and Total Residual Chlorine (TRC)**	**All Other Parameters**	**Report is Due**
First	January, February, March	Not required to sample.	Sample at least once during any month of the quarter	April 28th
Second	April, May, June	Sample at least once during any month of the quarter	Sample at least once during any month of the quarter	July 28th
Third	July, August, September	Sample at least once during any month of the quarter	Sample at least once during any month of the quarter	October 28th
Fourth	October	**Sample once during October**	Sample at least once during any month of the quarter	January 28th
	November & December	Not required to sample.		

Note 1 - Effluent limitations and monitoring requirements for *E. coli* are applicable only during the recreational season from April 1 through October 31. The Monthly Average Limit for *E. coli* is expressed as a geometric mean.

Note 2 - This permit contains a Total Residual Chlorine (TRC) limit.

(a) The Water Quality Based Effluent Limit for Total Residual Chlorine was calculated to be 17 µg/L (daily maximum limit) and 8 µg/L (monthly average limit). These limits are below the minimum quantification level (ML) of the most common and practical EPA approved CLTRC methods. The Department has determined the current acceptable ML for total residual chlorine to be 130 µg/L when using the DPD Colorimetric Method #4500 – CL G. from Standard Methods for the Examination of Waters and Wastewater. The permittee will conduct analyses in accordance with this method, or equivalent, and report actual analytical values. The minimum quantification level does not authorize the discharge of chlorine in excess of the effluent limits stated in the permit. Measured values greater than or equal to the minimum quantification level of 130 µg/L will be considered violations of the permit and values less than the minimum quantification level of 130 µg/L will be considered to be in compliance with the permit limitation.

(b) Disinfection is required during the recreational season from April 1 through October 31. Do not chlorinate during the non-recreational months and an actual analysis for TRC.

(c) Do not chemically de-chlorinate **if it is not needed to meet the limits in your permit.**

(d) If no chlorine was used in a given sampling period, an actual analysis for TRC is not necessary. Simply report as “0 µg/L” for TRC.

Note 3 - If no Aluminum or Iron was used in a given sampling period, an actual analysis is not necessary. Simply report as “0 mg/L”.

B. SCHEDULE OF COMPLIANCE

The facility shall attain compliance with final effluent limitations for Ammonia as N as soon as reasonably achievable or no later than **one (1) year** of the effective date of this permit. The existing recirculating sand filter facility employs technology capable of meeting the proposed final effluent limitations for Ammonia, but discharge monitoring reports indicate the facility has not always been in compliance with the proposed limitations. Therefore this permit includes a one (1) year schedule of compliance to make sufficient operational changes so that consistent compliance with final effluent limitations for Ammonia is attained.

C. STANDARD CONDITIONS

In addition to specified conditions stated herein, this permit is subject to the attached Parts I & III standard conditions dated August 1, 2014 and March 1, 2015, and hereby incorporated as though fully set forth herein.

D. SPECIAL CONDITIONS

1. Electronic Discharge Monitoring Report (eDMR) Submission System.
   (a) Discharge Monitoring Reporting Requirements. The permittee must electronically submit compliance monitoring data via the eDMR system. In regards to Standard Conditions Part I, Section B, #7, the eDMR system is currently the only Department approved reporting method for this permit.
   (b) Programmatic Reporting Requirements. The following reports (if required by this permit) must be electronically submitted as an attachment to the eDMR system until such a time the current or a new system is available to allow direct input of the data:
      (1) Schedule of Compliance Progress Reports;
      (2) Sludge/Biosolids Annual Reports; and
      (3) Any additional report required by the permit excluding bypass reporting.
      After such a system has been made available by the Department, required data shall be directly input into the system by the next report due date.
   (c) Other actions. The following shall be submitted electronically after such a system has been made available by the Department:
      (1) Notices of Termination (NOTs); and
      (2) Bypass reporting, See Special Condition #8 for 24-hr. bypass reporting requirements.
   (d) Electronic Submissions. To access the eDMR system, use the following link in your web browser: https://edmr.dnr.mo.gov/edmr/E2/Shared/Pages/Main/Login.aspx.
   (e) Waivers from Electronic Reporting. The permittee must electronically submit compliance monitoring data and reports unless a waiver is granted by the Department in compliance with 40 CFR Part 127. The permittee may obtain an electronic reporting waiver by first submitting an eDMR Waiver Request Form: http://dnr.mo.gov/forms/780-2692-f.pdf. The Department will either approve or deny this electronic reporting waiver request within 120 calendar days. Only permittees with an approved waiver request may submit monitoring data and reports on paper to the Department for the period that the approved electronic reporting waiver is effective.

D. SPECIAL CONDITIONS (continued)

2. The full implementation of this operating permit, which includes implementation of any applicable schedules of compliance, shall constitute compliance with all applicable federal and state statutes and regulations in accordance with §644.051.16, RSMo, and the Clean Water Act (CWA) section 402(k); however, this permit may be reopened and modified, or alternatively revoked and reissued:
   (a) To comply with any applicable effluent standard or limitation issued or approved under Sections 301(b)(2)(C) and (D), 304(b)(2), and 307(a)(2) of the CWA, if the effluent standard or limitation so issued or approved:
      (1) contains different conditions or is otherwise more stringent than any effluent limitation in the permit; or
      (2) controls any pollutant not limited in the permit.

3. All outfalls must be clearly marked in the field.

4. Permittee will cease discharge by connection to a facility with an area-wide management plan per 10 CSR 20-6.010(3)(B) within 90 days of notice of its availability.

5. Report as No Discharge when a discharge does not occur during the report period.

6. Reporting of Non-Detects:
   (a) An analysis conducted by the permittee or their contracted laboratory shall be conducted in such a way that the precision and accuracy of the analyzed result can be enumerated.
   (b) The permittee shall not report a sample result as “Non-Detect” without also reporting the detection limit of the test. Reporting as “Non Detect” without also including the detection limit will be considered failure to report, which is a violation of this permit.
   (c) The permittee shall provide the “Non-Detect” sample result using the less than sign and the minimum detection limit (e.g. <10).
   (d) Where the permit contains a Minimum Level (ML) and the permittee is granted authority in the permit to report zero in lieu of the < ML for a specified parameter (conventional, priority pollutants, metals, etc.), then zero (0) is to be reported for that parameter.
   (e) See Standard Conditions Part I, Section A, #4 regarding proper detection limits used for sample analysis.
   (f) When calculating monthly averages, one-half of the method detection limit (MDL) should be used instead of a zero. Where all data are below the MDL, the “<MDL” shall be reported as indicated in item (c).

7. It is a violation of the Missouri Clean Water Law to fail to pay fees associated with this permit (644.055 RSMo).

8. Bypasses are not authorized at this facility unless they meet the criteria in 40 CFR 122.41(m). If a bypass occurs, the permittee shall report in accordance to 40 CFR 122.41(m)(3), and with Standard Condition Part I, Section B, subsection 2. Bypasses are to be reported to the Southwest Regional Office during normal business hours or by using the online Sanitary Sewer Overflow/Facility Bypass Application located at: http://dnr.mo.gov/modnrcag/ or the Environmental Emergency Response spill-line at 573-634-2436 outside of normal business hours. Once an electronic reporting system compliant with 40 CFR Part 127, the National Pollutant Discharge Elimination System (NPDES) Electronic Reporting Rule, is available all bypasses must be reported electronically via the new system. Blending, which is the practice of combining a partially-treated wastewater process stream with a fully-treated wastewater process stream prior to discharge, is not considered a form of bypass. If the permittee wishes to utilize blending, the permittee shall file an application to modify this permit to facilitate the inclusion of appropriate monitoring conditions.

9. The facility must be sufficiently secured to restrict entry by children, livestock and unauthorized persons as well as to protect the facility from vandalism.

10. At least one gate must be provided to access the wastewater treatment facility and provide for maintenance and mowing. The gate shall remain closed except when temporarily opened by the permittee to access the facility to perform operational monitoring, sampling, maintenance, or mowing. The gates shall also be temporarily opened for inspections by the Department. The gate shall be closed and locked when the facility is not staffed.

11. At least one (1) warning sign shall be placed on each side of the facility enclosure in such positions as to be clearly visible from all directions of approach. There shall also be one (1) sign placed for every five hundred feet (500') (150 m) of the perimeter fence. A sign shall also be placed on each gate. Minimum wording shall be SEWAGE TREATMENT FACILITY—KEEP OUT. Signs shall be made of durable materials with characters at least two inches (2") high and shall be securely fastened to the fence, equipment or other suitable locations.

D. SPECIAL CONDITIONS (continued)

12. An Operation and Maintenance (O & M) manual shall be maintained by the permittee and made available to the operator. The O & M manual shall include key operating procedures and a brief summary of the operation of the facility.

13. An all-weather access road shall be provided to the treatment facility.

14. The discharge from the wastewater treatment facility shall be conveyed to the receiving stream via a closed pipe or a paved or rip-rapped open channel. Sheet or meandering drainage is not acceptable. The outfall sewer shall be protected against the effects of floodwater, ice or other hazards as to reasonably insure its structural stability and freedom from stoppage. The outfall shall be maintained so that a sample of the effluent can be obtained at a point after the final treatment process and before the discharge mixes with the receiving waters.

15. The media in the filter beds shall be properly maintained to prevent surface pooling, vegetative growth, and accumulation of leaf litter.

MISSOURI DEPARTMENT OF NATURAL RESOURCES
FACT SHEET
FOR THE PURPOSE OF RENEWAL
OF
MO-0132322
THE COTTAGES OF TABLE ROCK LAKE WASTEWATER TREATMENT FACILITY

The Federal Water Pollution Control Act ("Clean Water Act" Section 402 Public Law 92-500 as amended) established the National Pollutant Discharge Elimination System (NPDES) permit program. This program regulates the discharge of pollutants from point sources into the waters of the United States, and the release of stormwater from certain point sources. All such discharges are unlawful without a permit (Section 301 of the "Clean Water Act"). After a permit is obtained, a discharge not in compliance with all permit terms and conditions is unlawful. Missouri State Operating Permits (MSOPs) are issued by the Director of the Missouri Department of Natural Resources (Department) under an approved program, operating in accordance with federal and state laws (Federal "Clean Water Act" and "Missouri Clean Water Law" Section 644 as amended). MSOPs are issued for a period of five (5) years unless otherwise specified.

As per [40 CFR Part 124.8(a)] and [10 CSR 20-6.020(1)(A)2.] a Factsheet shall be prepared to give pertinent information regarding the applicable regulations, rationale for the development of effluent limitations and conditions, and the public participation process for the Missouri State Operating Permit (operating permit) listed below.

A Factsheet is not an enforceable part of an operating permit.

This Factsheet is for a Minor.

Part I – Facility Information

Facility Type: Non-POTW – Residential Subdivision – SIC #8641.

Facility Description: Recirculating sand filter/chemical addition to facilitate phosphorous removal/chlorination/dechlorination/sludge disposal by contract hauler
Design population equivalent is 58.
Design flow is 5,800 gallons per day.
Actual flow is 655 gallons per day.
Design sludge production is 0.57 dry tons/year

Have any changes occurred at this facility or in the receiving water body that effects effluent limit derivation?
☒ - No

Application Date: 07/08/18
Expiration Date: 12/11/17

OUTFALL(S) TABLE:

OUTFALL	DESIGN FLOW (CFS)	TREATMENT LEVEL	EFFLUENT TYPE
#001	0.009	Secondary	Domestic

Facility Performance History:
This facility was last inspected on September 24, 2014. The conditions of the facility at the time of inspection were found to be satisfactory. A review of Discharge Monitoring Reports shows an exceedance for Phosphorous for the following months: December 2013 through September 2014, November 2014, December 2014, May 2015 through December 2015, October 2016, July 2017, and October 2017.

Comments:
Changes in this permit include the addition of a schedule of compliance to meet final effluent limits for Ammonia, and the reduction of sampling and reporting frequencies from monthly to quarterly. See Part VI of the Fact Sheet for further information regarding the addition and removal of effluent parameters. Special conditions were updated to include the reporting of Non-detects and bypass reporting requirements.

Part II – Operator Certification Requirements

☒ - This facility is not required to have a certified operator.

Part III– Operational Monitoring

☒ - As per [10 CSR 20-9.010(4))], the facility is not required to conduct operational monitoring.

Part IV – Receiving Stream Information

RECEIVING STREAM(S) TABLE: OUTFALL #001

WATER-BODY NAME	CLASS	WBID	DESIGNATED USES*	12-DIGIT HUC	DISTANCE TO CLASSIFIED SEGMENT (MI)
Tributary to Table Rock Lake	NA	NA	General Criteria	11010001-1204	0.0
Table Rock Lake	L2	7313	AQL, HHP, IRR, LWW, SCR, WBC-A		0.18

*As per 10 CSR 20-7.031 Missouri Water Quality Standards, the Department defines the Clean Water Commission's water quality objectives in terms of "water uses to be maintained and the criteria to protect those uses." The receiving stream and 1st classified receiving stream's beneficial water uses to be maintained are in the receiving stream table in accordance with [10 CSR 20-7.031(1)(C)].

Uses which may be found in the receiving streams table, above:

10 CSR 20-7.031(1)(C)1.:
AQL = Protection of aquatic life (Current narrative use(s) are defined to ensure the protection and propagation of fish shellfish and wildlife, which is further subcategorized as: WWH = Warm Water Habitat; **CDF** = Cold-water fishery (Current narrative use is cold-water habitat.); **CLF** = Cool-water fishery (Current narrative use is cool-water habitat); EAH = Ephemeral Aquatic Habitat; MAH = Modified Aquatic Habitat; LAH = Limited Aquatic Habitat. This permit uses AQL effluent limitations in 10 CSR 20-7.031 Table A for all habitat designations unless otherwise specified.)

10 CSR 20-7.031(1)(C)2.: Recreation in and on the water
WBC = Whole Body Contact recreation where the entire body is capable of being submerged;
WBC-A = Whole body contact recreation that supports swimming uses and has public access;
WBC-B = Whole body contact recreation that supports swimming;
SCR = Secondary Contact Recreation (like fishing, wading, and boating).

10 CSR 20-7.031(1)(C)3. to 7.:
HHP (formerly HHF) = Human Health Protection as it relates to the consumption of fish;
IRR = Irrigation for use on crops utilized for human or livestock consumption;
LWW = Livestock and wildlife watering (Current narrative use is defined as LWP = Livestock and Wildlife Protection);
DWS = Drinking Water Supply;
IND = Industrial water supply

10 CSR 20-7.031(1)(C)8-11.: Wetlands (10 CSR 20-7.031 Table A currently does not have corresponding habitat use criteria for these defined uses)
WSA = Storm- and flood-water storage and attenuation; WHP = Habitat for resident and migratory wildlife species;
WRC = Recreational, cultural, educational, scientific, and natural aesthetic values and uses; WHC = Hydrologic cycle maintenance.

10 CSR 20-7.031(6): **GRW** = Groundwater

RECEIVING STREAM(S) LOW-FLOW VALUES:

RECEIVING STREAM	LOW-FLOW VALUES (CFS)		
	1Q10	7Q10	30Q10
Tributary to Table Rock Lake	0	0	0

MIXING CONSIDERATIONS

Mixing Zone: Not Allowed [10 CSR 20-7.031(5)(A)4.B.(I)(a)].
Zone of Initial Dilution: Not Allowed [10 CSR 20-7.031(5)(A)4.B.(I)(b)].

Receiving Water Body's Water Quality

Currently, no stream survey has been conducted by the Department. When a stream survey is conducted, more information may be available about the receiving stream.

Part V – Rationale and Derivation of Effluent Limitations & Permit Conditions

ALTERNATIVE EVALUATIONS FOR NEW FACILITIES:
As per [10 CSR 20-7.015(4)(A)], discharges to losing streams shall be permitted only after other alternatives including land application, discharges to a gaining stream and connection to a regional wastewater treatment facility have been evaluated and determined to be unacceptable for environmental and/or economic reasons.

☒ - The facility does not discharge to a Losing Stream as defined by [10 CSR 20-2.010(36)] & [10 CSR 20-7.031(1)(N)], or is an existing facility.

ANTI-BACKSLIDING:
A provision in the Federal Regulations [CWA §303(d)(4); CWA §402(o); 40 CFR Part 122.44(l)] that requires a reissued permit to be as stringent as the previous permit with some exceptions.

☒ - Limitations in this operating permit for the reissuance of this permit conform to the anti-backsliding provisions of Section 402(o) of the Clean Water Act, and 40 CFR Part 122.44.

☒ - Information is available which was not available at the time of permit issuance (other than revised regulations, guidance, or test methods) and which would have justified the application of a less stringent effluent limitation at the time of permit issuance.

- **Aluminum, Total Recoverable**. This facility uses chemicals for phosphorous removal that may contain aluminum. Monitoring only requirements have been included in this permit in order to determine if a future effluent limitation is necessary to protect water quality.

- **Iron, Total Recoverable**. This facility uses chemicals for phosphorous removal that may contain iron. Monitoring only requirements have been included in this permit in order to determine if a future effluent limitation is necessary to protect water quality.

☒ - The Department determines that technical mistakes or mistaken interpretations of law were made in issuing the permit under section 402(a)(1)(b).

- **General Criteria**. The previous permit contained a special condition which described a specific set of prohibitions related to general criteria found in 10 CSR 20-7.031(4). In order to comply with 40 CFR 122.44(d)(1), the permit writer has conducted reasonable potential determinations for each general criterion and established numeric effluent limitations where reasonable potential exists. While the removal of the previous permit special condition creates the appearance of backsliding, since this permit establishes numeric limitations where reasonable potential to cause or contribute to an excursion of the general criteria exists the permit maintains sufficient effluent limitations and monitoring requirements in order to protect water quality, this permit is equally protective as compared to the previous permit. Therefore, given this new information, and the fact that the previous permit special condition was not consistent with 40 CFR 122.44(d)(1), an error occurred in the establishment of the general criteria as a special condition of the previous permit. Please see Part VI – Effluent Limits Determination for more information regarding the reasonable potential determinations for each general criterion related to this facility.

ANTIDEGRADATION:
In accordance with Missouri's Water Quality Standard [10 CSR 20-7.031(3)], the Department is to document by means of Antidegradation Review that the use of a water body's available assimilative capacity is justified. Degradation is justified by documenting the socio-economic importance of a discharging activity after determining the necessity of the discharge.

☒ - No degradation proposed and no further review necessary. Facility did not apply for authorization to increase pollutant loading or to add additional pollutants to their discharge.

AREA-WIDE WASTE TREATMENT MANAGEMENT & CONTINUING AUTHORITY:
As per [10 CSR 20-6.010(3)(B)], …An applicant may utilize a lower preference continuing authority by submitting, as part of the application, a statement waiving preferential status from each existing higher preference authority, providing the waiver does not conflict with any area-wide management plan approved under section 208 of the Federal Clean Water Act or any other regional sewage service and treatment plan approved for higher preference authority by the Department.

BIOSOLIDS & SEWAGE SLUDGE:
Biosolids are solid materials resulting from domestic wastewater treatment that meet federal and state criteria for beneficial uses (i.e. fertilizer). Sewage sludge is solids, semi-solids, or liquid residue generated during the treatment of domestic sewage in a treatment works; including but not limited to, domestic septage; scum or solids removed in primary, secondary, or advanced wastewater treatment process; and a material derived from sewage sludge. Sewage sludge does not include ash generated during the firing of sewage sludge in a sewage sludge incinerator or grit and screening generated during preliminary treatment of domestic sewage in a treatment works. Additional information regarding biosolids and sludge is located at the following web address: http://extension.missouri.edu/main/DisplayCategory.aspx?C=74, items WQ422 through WQ449.

☒ - Permittee is not authorized to land apply biosolids. Sludge/biosolids are removed by contract hauler.

COMPLIANCE AND ENFORCEMENT:
Enforcement is the action taken by the Water Protection Program (WPP) to bring an entity into compliance with the Missouri Clean Water Law, its implementing regulations, and/or any terms and conditions of an operating permit. The primary purpose of the enforcement activity in the WPP is to resolve violations and return the entity to compliance.

☒ - The facility is not currently under Water Protection Program enforcement action.

ELECTRONIC DISCHARGE MONITORING REPORT (EDMR) SUBMISSION SYSTEM:
The U.S. Environmental Protection Agency (EPA) promulgated a final rule on October 22, 2015, to modernize Clean Water Act reporting for municipalities, industries, and other facilities by converting to an electronic data reporting system. This final rule requires regulated entities and state and federal regulators to use information technology to electronically report data required by the National Pollutant Discharge Elimination System (NPDES) permit program instead of filing paper reports. To comply with the federal rule, the Department is requiring all permittees to begin submitting discharge monitoring data and reports online. In an effort to aid facilities in the reporting of applicable information electronically, the Department has created several new forms including operational control monitoring forms and an I&I location and reduction form. These forms are for optional use and can be found on the Department's website at the following locations:

Operational Monitoring Lagoon: http://dnr.mo.gov/forms/780-2801-f.pdf
Operational Monitoring Mechanical: http://dnr.mo.gov/forms/780-2800-f.pdf
I&I Report: http://dnr.mo.gov/forms/780-2690-f.pdf

Per 40 CFR 127.15 and 127.24, permitted facilities may request a temporary waiver for up to 5 years or a permanent waiver from electronic reporting from the Department. To obtain an electronic reporting waiver, a permittee must first submit an eDMR Waiver Request Form: http://dnr.mo.gov/forms/780-2692-f.pdf. A request must be made for each facility. If more than one facility is owned or operated by a single entity, then the entity must submit a separate request for each facility based on its specific circumstances. An approved waiver is non-transferable.

The Department must review and notify the facility within 120 calendar days of receipt if the waiver request has been approved or rejected [40 CFR 124.27(a)]. During the Department review period as well as after a waiver is granted, the facility must continue submitting a hard-copy of any reports required by their permit. The Department will enter data submitted in hard-copy from those facilities allowed to do so and electronically submit the data to the EPA on behalf of the facility.

☒ - The permittee/facility is currently using the eDMR data reporting system.

PRETREATMENT PROGRAM:
The reduction of the amount of pollutants, the elimination of pollutants, or the alteration of the nature of pollutant properties in wastewater prior to or in lieu of discharging or otherwise introducing such pollutants into a Publicly Owned Treatment Works [40 CFR Part 403.3(q)].

Pretreatment programs are required at any POTW (or combination of POTW operated by the same authority) and/or municipality with a total design flow greater than 5.0 MGD and receiving industrial wastes that interfere with or pass through the treatment works or are otherwise subject to the pretreatment standards. Pretreatment programs can also be required at POTWs/municipals with a design flow less than 5.0 MGD if needed to prevent interference with operations or pass through.

☒ - The permittee, at this time, is not required to have a Pretreatment Program or does not have an approved pretreatment program.

REASONABLE POTENTIAL ANALYSIS (RPA):
Federal regulation [40 CFR Part 122.44(d)(1)(i)] requires effluent limitations for all pollutants that are or may be discharged at a level that will cause or have the reasonable potential to cause or contribute to an in-stream excursion above narrative or numeric water quality standard.

In accordance with [40 CFR Part 122.44(d)(1)(iii)] if the permit writer determines that any given pollutant has the reasonable potential to cause, or contribute to an in-stream excursion above the WQS, the permit must contain effluent limits for that pollutant.

☒ - An RPA was conducted on appropriate parameters. Please see **APPENDIX – RPA RESULTS.**

REMOVAL EFFICIENCY:
Removal efficiency is a method by which the Federal Regulations define Secondary Treatment and Equivalent to Secondary Treatment, which applies to Biochemical Oxygen Demand 5-day (BOD_5) and Total Suspended Solids (TSS) for Publicly Owned Treatment Works (POTWs)/municipals.

☒ - Influent monitoring is not being required to determine percent removal.

SANITARY SEWER OVERFLOWS (SSO) AND INFLOW AND INFILTRATION (I&I):
Sanitary Sewer Overflows (SSOs) are defined as untreated sewage releases and are considered bypassing under state regulation [10 CSR 20-2.010(11)] and should not be confused with the federal definition of bypass. SSOs result from a variety of causes including blockages, line breaks, and sewer defects that can either allow wastewater to backup within the collection system during dry weather conditions or allow excess stormwater and groundwater to enter and overload the collection system during wet weather conditions. SSOs can also result from lapses in sewer system operation and maintenance, inadequate sewer design and construction, power failures, and vandalism. SSOs include overflows out of manholes, cleanouts, broken pipes, and other into waters of the state and onto city streets, sidewalks, and other terrestrial locations.

Inflow and Infiltration (I&I) is defined as unwanted intrusion of stormwater or groundwater into a collection system. This can occur from points of direct connection such as sump pumps, roof drain downspouts, foundation drains, and storm drain cross-connections or through cracks, holes, joint failures, faulty line connections, damaged manholes, and other openings in the collection system itself. I&I results from a variety of causes including line breaks, improperly sealed connections, cracks caused by soil erosion/settling, penetration of vegetative roots, and other sewer defects. In addition, excess stormwater and groundwater entering the collection system from line breaks and sewer defects have the potential to negatively impact the treatment facility.

Missouri RSMo §644.026.1.(13) mandates that the Department issue permits for discharges of water contaminants into the waters of this state, and also for the operation of sewer systems. Such permit conditions shall ensure compliance with all requirements as established by sections 644.006 to 644.141. Standard Conditions Part I, referenced in the permit, contains provisions requiring proper operation and maintenance of all facilities and systems of treatment and control. Missouri RSMo §644.026.1.(15) instructs the Department to require proper maintenance and operation of treatment facilities and sewer systems and proper disposal of residual waste from all such facilities. To ensure that public health and the environment are protected, any noncompliance which may endanger public health or the environment must be reported to the Department within 24 hours of the time the permittee becomes aware of the noncompliance. Standard Conditions Part I, referenced in the permit, contains the reporting requirements for the permittee when bypasses and upsets occur.

☒ - This facility is not required to develop or implement a program for maintenance and repair of the collection system; however, it is a violation of Missouri State Environmental Laws and Regulations to allow untreated wastewater to discharge to waters of the state.

SCHEDULE OF COMPLIANCE (SOC):
Per 644.051.4 RSMo, a permit may be issued with a Schedule of Compliance (SOC) to provide time for a facility to come into compliance with new state or federal effluent regulations, water quality standards, or other requirements. Such a schedule is not allowed if the facility is already in compliance with the new requirement, or if prohibited by other statute or regulation. A SOC includes an enforceable sequence of interim requirements (actions, operations, or milestone events) leading to compliance with the Missouri Clean Water Law, its implementing regulations, and/or the terms and conditions of an operating permit. *See also* Section 502(17) of the Clean Water Act, and 40 CFR §122.2. For new effluent limitations, the permit may include interim monitoring for the specific parameter to demonstrate the facility is not already in compliance with the new requirement. Per 40 CFR § 122.47(a)(1) and 10 CSR 20-7.031(11), compliance must occur as soon as possible. If the permit provides a schedule for meeting new water quality based effluent limits, a SOC must include an enforceable, final effluent limitation in the permit even if the SOC extends beyond the life of the permit.

A SOC is not allowed:

- For effluent limitations based on technology-based standards established in accordance with federal requirements, if the deadline for compliance established in federal regulations has passed. 40 CFR § 125.3.
- For a newly constructed facility in most cases. Newly constructed facilities must meet applicable effluent limitations when discharge begins, because the facility has installed the appropriate control technology as specified in a permit or antidegradation review. A SOC is allowed for a new water quality based effluent limit that was not included in a previously public noticed permit or antidegradation review, which may occur if a regulation changes during construction.
- To develop a TMDL, UAA, or other study associated with development of a site specific criterion. A facility is not prohibited from conducting these activities, but a SOC may not be granted for conducting these activities.

In order to provide guidance to Permit Writers in developing SOCs, and attain a greater level of consistency, on April 9, 2015 the Department issued an updated policy on development of SOCs. This policy provides guidance to Permit Writers on the standard time frames for schedules for common activities, and guidance on factors that may modify the length of the schedule such as a Cost Analysis for Compliance.

☒ - The time given for effluent limitations of this permit listed under Interim Effluent Limitation and Final Effluent Limitations were established in accordance with [10 CSR 20-7.031(11)]. The facility has been given a schedule of compliance to meet final effluent limits for Ammonia. The one (1) year schedule of compliance allowed for this facility should provide adequate time to evaluate operations and implement changes required to meet effluent limits.

STORMWATER POLLUTION PREVENTION PLAN (SWPPP):

In accordance with 40 CFR 122.44(k) *Best Management Practices (BMPs)* to control or abate the discharge of pollutants when: (1) Authorized under section 304(e) of the Clean Water Act (CWA) for the control of toxic pollutants and hazardous substances from ancillary industrial activities: (2) Authorized under section 402(p) of the CWA for the control of stormwater discharges; (3) Numeric effluent limitations are infeasible; or (4) the practices are reasonably necessary to achieve effluent limitations and standards or to carry out the purposes and intent of the CWA.

In accordance with the EPA's *Developing Your Stormwater Pollution Prevention Plan, A Guide for Industrial Operators*, (Document number EPA 833-B-09-002) [published by the United States Environmental Protection Agency (USEPA) in February 2009], BMPs are measures or practices used to reduce the amount of pollution entering (regarding this operating permit) waters of the state. BMPs may take the form of a process, activity, or physical structure.

Additionally in accordance with the Stormwater Management, a SWPPP is a series of steps and activities to (1) identify sources of pollution or contamination, and (2) select and carry out actions which prevent or control the pollution of stormwater discharges. The purpose of a SWPPP is to comply with all applicable stormwater regulations by creating an adaptive management plan to control and mitigate stream pollution from stormwater runoff. Developing a SWPPP provides opportunities to employ appropriate BMPs to minimize the risk of pollutants being discharged during storm events. The following paragraph outlines the general steps the permittee should take to determine which BMPs will work to achieve the benchmark values or limits in the permit. This section is not intended to be all encompassing or restrict the use of any physical BMP or operational and maintenance procedure assisting in pollution control. Additional steps or revisions to the SWPPP may be required to meet the requirements of the permit.

Areas which should be included in the SWPPP are identified in 40 CFR 122.26(b)(14). Once the potential sources of stormwater pollution have been identified, a plan should be formulated to best control the amount of pollutant being released and discharged by each activity or source. This should include, but is not limited to, minimizing exposure to stormwater, good housekeeping measures, proper facility and equipment maintenance, spill prevention and response, vehicle traffic control, and proper materials handling. Once a plan has been developed the facility will employ the control measures determined to be adequate to achieve the benchmark values discussed above. The facility will conduct monitoring and inspections of the BMPs to ensure they are working properly and re-evaluate any BMP not achieving compliance with permitting requirements. For example, if sample results from an outfall show values of TSS above the benchmark value, the BMP being employed is deficient in controlling stormwater pollution. Corrective action should be taken to repair, improve, or replace the failing BMP. This internal evaluation is required at least once per month but should be continued more frequently if BMPs continue to fail. If failures do occur, continue this trial and error process until appropriate BMPs have been established.

For new, altered, or expanded stormwater discharges, the SWPPP shall identify reasonable and effective BMPs while accounting for environmental impacts of varying control methods. The antidegradation analysis must document why no discharge or no exposure options are not feasible. The selection and documentation of appropriate control measures shall serve as an alternative analysis of technology and fulfill the requirements of antidegradation [10 CSR 20-7.031(3)]. For further guidance, consult the antidegradation implementation procedure (http://dnr.mo.gov/env/wpp/docs/AIP050212.pdf).

Alternative Analysis (AA) evaluation of the BMPs is a structured evaluation of BMPs that are reasonable and cost effective. The AA evaluation should include practices that are designed to be: 1) non-degrading; 2) less degrading; or 3) degrading water quality. The glossary of AIP defines these three terms. The chosen BMP will be the most reasonable and effective management strategy while ensuring the highest statutory and regulatory requirements are achieved and the highest quality water attainable for the facility is discharged. The AA evaluation must demonstrate why "no discharge" or "no exposure" is not a feasible alternative at the facility. This structured analysis of BMPs serves as the antidegradation review, fulfilling the requirements of 10 CSR 20-7.031(3) Water Quality Standards and *Antidegradation Implementation Procedure* (AIP), Section II.B.

If parameter-specific numeric exceedances continue to occur and the permittee feels there are no practicable or cost-effective BMPs which will sufficiently reduce a pollutant concentration in the discharge to the benchmark values established in the permit, the permittee can submit a request to re-evaluate the benchmark values. This request needs to include 1) a detailed explanation of why the facility is unable to comply with the permit conditions and unable to establish BMPs to achieve the benchmark values; 2) financial data of the company and documentation of cost associated with BMPs for review and 3) the SWPPP, which should contain adequate documentation of BMPs employed, failed BMPs, corrective actions, and all other required information. This will allow the Department to conduct a cost analysis on control measures and actions taken by the facility to determine cost-effectiveness of BMPs. The request shall be submitted in the form of an operating permit modification; the application is found at: http://dnr.mo.gov/forms/index.html.

☒ - At this time, the permittee is not required to develop and implement a SWPPP.

VARIANCE:
As per the Missouri Clean Water Law § 644.061.4, variances shall be granted for such period of time and under such terms and conditions as shall be specified by the commission in its order. The variance may be extended by affirmative action of the commission. In no event shall the variance be granted for a period of time greater than is reasonably necessary for complying with the Missouri Clean Water Law §§644.006 to 644.141 or any standard, rule or regulation promulgated pursuant to Missouri Clean Water Law §§644.006 to 644.141.

☒ - This operating permit is not drafted under premises of a petition for variance.

WASTELOAD ALLOCATIONS (WLA) FOR LIMITS:
As per [10 CSR 20-2.010(78)], the amount of pollutant each discharger is allowed by the Department to release into a given stream after the Department has determined total amount of pollutant that may be discharged into that stream without endangering its water quality.

☒ - Wasteload allocations were calculated where applicable using water quality criteria or water quality model results and the dilution equation below:

$$Ce = \frac{(Qe + Qs)C - (Qs \times Cs)}{(Qe)}$$ (EPA/505/2-90-001, Section 4.5.5)

Where C = downstream concentration
Cs = upstream concentration
Qs = upstream flow
Ce = effluent concentration
Qe = effluent flow

Chronic wasteload allocations were determined using applicable chronic water quality criteria (CCC: criteria continuous concentration) and stream volume of flow at the edge of the mixing zone (MZ). Acute wasteload allocations were determined using applicable water quality criteria (CMC: criteria maximum concentration) and stream volume of flow at the edge of the zone of initial dilution (ZID).

Water quality based maximum daily and average monthly effluent limitations were calculated using methods and procedures outlined in USEPA's "Technical Support Document For Water Quality-based Toxics Control" (EPA/505/2-90-001).

Number of Samples "n":
Additionally, in accordance with the TSD for water quality-based permitting, effluent quality is determined by the underlying distribution of daily values, which is determined by the Long Term Average (LTA) associated with a particular Wasteload Allocation (WLA) and by the Coefficient of Variation (CV) of the effluent concentrations. Increasing or decreasing the monitoring frequency does not affect this underlying distribution or treatment performance, which should be, at a minimum, be targeted to comply with the values dictated by the WLA. Therefore, it is recommended that the actual planned frequency of monitoring normally be used to determine the value of "n" for calculating the AML. However, in situations where monitoring frequency is once per month or less, a higher value for "n" must be assumed for AML derivation purposes. Thus, the statistical procedure being employed using an assumed number of samples is "n = 4" at a minimum. For Total Ammonia as Nitrogen, "n = 30" is used.

WLA MODELING:
There are two general types of effluent limitations, technology-based effluent limits (TBELs) and water quality based effluent limits (WQBELs). If TBELs do not provide adequate protection for the receiving waters, then WQBEL must be used.

☒ - A WLA study was either not submitted or determined not applicable by Department staff.

WATER QUALITY STANDARDS:
Per [10 CSR 20-7.031(4)], General Criteria shall be applicable to all waters of the state at all times including mixing zones. Additionally, [40 CFR 122.44(d)(1)] directs the Department to establish in each NPDES permit to include conditions to achieve water quality established under Section 303 of the Clean Water Act, including State narrative criteria for water quality.

WHOLE EFFLUENT TOXICITY (WET) TEST:
A WET test is a quantifiable method of determining if a discharge from a facility may be causing toxicity to aquatic life by itself, in combination with or through synergistic responses when mixed with receiving stream water.

Under the federal Clean Water Act (CWA) §101(a)(3), requiring WET testing is reasonably appropriate for site-specific Missouri State Operating Permits for discharges to waters of the state issued under the National Pollutant Discharge Elimination System (NPDES). WET testing is also required by 40 CFR 122.44(d)(1). WET testing ensures that the provisions in the 10 CSR 20-6.010(8)(A)7. and the Water Quality Standards 10 CSR 20-7.031(4)(D),(F),(G),(I)2.A & B are being met. Under [10 CSR 20-6.010(8)(A)4], the Department may require other terms and conditions that it deems necessary to assure compliance with the Clean Water Act and related regulations of the Missouri Clean Water Commission. In addition the following MCWL apply: §§§644.051.3 requires the Department to set permit conditions that comply with the MCWL and CWA; 644.051.4 specifically references toxicity as an item we must consider in writing permits (along with water quality-based effluent limits, pretreatment, etc…); and 644.051.5 is the basic authority to require testing conditions. WET test will be required by facilities meeting the following criteria:

- ☐ Facility is a designated Major.
- ☐ Facility continuously or routinely exceeds its design flow.
- ☐ Facility that exceeds its design population equivalent (PE) for BOD_5 whether or not its design flow is being exceeded.
- ☐ Facility (whether primarily domestic or industrial) that alters its production process throughout the year.
- ☐ Facility handles large quantities of toxic substances, or substances that are toxic in large amounts.
- ☐ Facility has Water Quality-based Effluent Limitations for toxic substances (other than NH_3)
- ☐ Facility is a municipality with a Design Flow ≥ 22,500 gpd.
- ☐ Other – please justify.

☒ - At this time, the permittee is not required to conduct WET test for this facility.

40 CFR 122.41(M) - BYPASSES:
The federal Clean Water Act (CWA), Section 402 prohibits wastewater dischargers from "bypassing" untreated or partially treated sewage (wastewater) beyond the headworks. A bypass is defined as an intentional diversion of waste streams from any portion of a treatment facility, [40 CFR 122.41(m)(1)(i)]. Additionally, Missouri regulation 10 CSR 20-7.015(9)(G) states a bypass means the intentional diversion of waste streams from any portion of a treatment facility, except in the case of blending, to waters of the state. Only under exceptional and specified limitations do the federal regulations allow for a facility to bypass some or all of the flow from its treatment process. Bypasses are prohibited by the CWA unless a permittee can meet all of the criteria listed in 40 CFR 122.41(m)(4)(i)(A), (B), & (C). Any bypasses from this facility are subject to the reporting required in 40 CFR 122.41(l)(6) and per Missouri's Standard Conditions I, Section B, part 2.b. Additionally, Anticipated Bypasses include bypasses from peak flow basins or similar devices designed for peak wet weather flows.

☒ - This facility does not anticipate bypassing.

303(d) LIST & TOTAL MAXIMUM DAILY LOAD (TMDL):
Section 303(d) of the federal Clean Water Act requires that each state identify waters that are not meeting water quality standards and for which adequate water pollution controls have not been required. Water quality standards protect such beneficial uses of water as whole body contact (such as swimming), maintaining fish and other aquatic life, and providing drinking water for people, livestock and wildlife. The 303(d) list helps state and federal agencies keep track of waters that are impaired but not addressed by normal water pollution control programs.

A TMDL is a calculation of the maximum amount of a given pollutant that a body of water can absorb before its water quality is affected. If a water body is determined to be impaired as listed on the 303(d) list, then a watershed management plan will be developed that shall include the TMDL calculation

☒ - This facility discharges to a 303(d) listed stream. Table Rock Lake is listed on the 2002 Missouri 303(d) List for Nutrients, Chlorophyll-a, and Total Nitrogen. It is unknown at this time if the facility is a source of the above listed pollutant(s) or considered to contribute to the impairment of Table Rock Lake. Once a TMDL is developed, the permit may be modified to include WLAs from the TMDL.

Part VI – Effluent Limits Determination

APPLICABLE DESIGNATIONS OF WATERS OF THE STATE:
As per Missouri's Effluent Regulations [10 CSR 20-7.015], the waters of the state are divided into the below listed seven (7) categories. Each category lists effluent limitations for specific parameters, which are presented in each outfall's Effluent Limitation Table and further discussed in the Derivation & Discussion of Limits section.

- ☐ Missouri or Mississippi River [10 CSR 20-7.015(2)]
- ☐ Lakes or Reservoirs [10 CSR 20-7.015(3)]
- ☐ Losing Streams [10 CSR 20-7.015(4)]
- ☐ Metropolitan No-Discharge Streams [10 CSR 20-7.015(5)]
- ☐ Special Streams [10 CSR 20-7.015(6)]
- ☐ Subsurface Waters [10 CSR 20-7.015(7)]
- ☒ All Other Waters [10 CSR 20-7.015(8)]

OUTFALL #001 – MAIN FACILITY OUTFALL
Effluent limitations derived and established in the below Effluent Limitations Table are based on current operations of the facility. Future permit action due to facility modification may contain new operating permit terms and conditions that supersede the terms and conditions, including effluent limitations, of this operating permit.

EFFLUENT LIMITATIONS TABLE:

PARAMETER	Unit	Basis for Limits	Daily Maximum	Weekly Average	Monthly Average	Previous Permit Limit	Sampling Frequency	Reporting Frequency	Sample Type ****
Flow	MGD	1	*		*	*/*	1/quarter	quarterly	E
BOD_5	mg/L	1		30	20	30/20	1/quarter	quarterly	G
TSS	mg/L	1		30	20	30/20	1/quarter	quarterly	G
Escherichia coli **	#/100mL	1, 3	630		126	630/126	1/quarter	quarterly	G
Ammonia as N (Apr 1 –Sep 30)	mg/L	2, 3	*		*	*/*	1/quarter	quarterly	G
Ammonia as N (Oct 1 – Mar 31)	mg/L	2, 3	12.1		2.4	*/*	1/quarter	quarterly	G
Chlorine, Total Residual	µg/L	1, 3	< 130		< 130	<130/<130	1/quarter	quarterly	G
Total Phosphorus as P	mg/L	8	*		0.5	*/0.5	1/quarter	quarterly	G
Aluminum, Total Recoverable	mg/L	8	*		*	0.75/0.37	1/quarter	quarterly	G
Iron, Total Recoverable	mg/L	8	*		*	1.6/0.82	1/quarter	quarterly	G
PARAMETER	**Unit**	**Basis for Limits**	**Minimum**		**Maximum**	**Previous Permit Limit**	**Sampling Frequency**	**Reporting Frequency**	**Sample Type**
pH	SU	1	6.5		9.0	6.5-9.0	1/quarter	quarterly	G

* - Monitoring requirement only.
** - #/100mL; the Monthly Average for *E. coli* is a geometric mean.
*** - Parameter not previously established in previous state operating permit.

**** - C = 24-hour composite
G = Grab
T = 24-hr. total
E = 24-hr. estimate

Basis for Limitations Codes:
1. State or Federal Regulation/Law
2. Water Quality Standard (includes RPA)
3. Water Quality Based Effluent Limits
4. Antidegradation Review
5. Antidegradation Policy
6. Water Quality Model
7. Best Professional Judgment
8. TMDL or Permit in lieu of TMDL
9. WET Test Policy
10. Multiple Discharger Variance

OUTFALL #001 – DERIVATION AND DISCUSSION OF LIMITS:

- **Flow**. In accordance with [40 CFR Part 122.44(i)(1)(ii)] the volume of effluent discharged from each outfall is needed to assure compliance with permitted effluent limitations. If the permittee is unable to obtain effluent flow, then it is the responsibility of the permittee to inform the Department, which may require the submittal of an operating permit modification.

- **Biochemical Oxygen Demand (BOD_5)**. 30 mg/L as a Weekly Average and 20 mg/L as a Monthly Average. Please see the **APPLICABLE DESIGNATION OF WATERS OF THE STATE** sub-section of the **Effluent Limits Determination.**

- **Total Suspended Solids (TSS).** 30 mg/L as a Weekly Average and 20 mg/L as a Monthly Average. Please see the **APPLICABLE DESIGNATION OF WATERS OF THE STATE** sub-section of the **Effluent Limits Determination.**

- ***Escherichia coli (E. coli)***. Monthly average of 126 per 100 mL as a geometric mean and Daily Maximum of 630 per 100 mL during the recreational season (April 1 – October 31), to protect Whole Body Contact Recreation (A) designated use of the receiving stream, as per 10 CSR 20-7.031(5)(C). An effluent limit for both monthly average and daily maximum is required by 40 CFR 122.45(d). The Geometric Mean is calculated by multiplying all of the data points and then taking the nth root of this product, where n = # of samples collected. For example: Five *E. coli* samples were collected with results of 1, 4, 6, 10, and 5 (#/100mL). Geometric Mean = 5th root of (1)(4)(6)(10)(5) = 5th root of 1,200 = 4.1 #/100mL.

- **Total Ammonia Nitrogen**. Early Life Stages Present Total Ammonia Nitrogen criteria apply [10 CSR 20-7.031(5)(B)7.C. & Table B3]. Background total ammonia nitrogen = 0.01 mg/L. No mixing considerations allowed; therefore, WLA = appropriate criterion.

Season	Temp (˚C)	pH (SU)	Total Ammonia Nitrogen CCC (mg/L)	Total Ammonia Nitrogen CMC (mg/L)
Summer	26	7.8	1.5	12.1
Winter	6	7.8	3.1	12.1

Summer: April 1 – September 30
Monitoring only for the summer designated months. The reasonable potential analysis determined that Ammonia in this facility's discharge is unlikely to exceed water quality standards for Ammonia in the summer months.

Winter: October 1 – March 31
Chronic WLA: C_e = ((0.009 + 0.0)3.1 – (0.0 * 0.01))/0.009
C_e = 3.1 mg/L

Acute WLA: C_e = ((0.009 + 0.0)12.1 – (0.0 * 0.01))/0.009
C_e = 12.1 mg/L

LTA_c = 3.1 mg/L (0.494) = 1.53 mg/L [CV = 1.84, 99th Percentile, 30 day avg.]
LTA_a = 12.1 mg/L (0.124) = 1.50 mg/L [CV = 1.84, 99th Percentile]

Use most protective number of LTA_c or LTA_a.

MDL = 1.50 mg/L (8.07) = **12.1** mg/L [CV = 1.84, 99th Percentile]
AML = 1.50 mg/L (1.62) = **2.4** mg/L [CV = 1.84, 95th Percentile, n =30]

- **Total Residual Chlorine (TRC)**. Warm-water Protection of Aquatic Life CCC = 10 µg/L, CMC = 19 µg/L [10 CSR 20-7.031, Table A]. Background TRC = 0.0 µg/L.

Chronic WLA: C_e = ((0.009 + 0.0)10 – (0.0 * 0.0))/0.009
C_e = 10 µg/L

Acute WLA: C_e = ((0.009 + 0.0)19 – (0.0 * 0.0))/0.009
C_e = 19 µg/L

LTA_c = 10 (0.527) = 5.3 µg/L [CV = 0.6, 99th Percentile]
LTA_a = 19 (0.321) = 6.1 µg/L [CV = 0.6, 99th Percentile]

Use most protective number of LTA_c or LTA_a.

MDL = 5.3 (3.11) = **17** µg/L [CV = 0.6, 99th Percentile]
AML = 5.3 (1.55) = **8** µg/L [CV = 0.6, 95th Percentile, n = 4]

The Water Quality Based Effluent Limit for Total Residual Chlorine was calculated to be 17 µg/L (daily maximum limit) and 8 µg/L (monthly average limit). These limits are below the minimum quantification level (ML) of the most common and practical EPA approved CLTRC methods. The Department has determined the current acceptable ML for total residual chlorine to be 130 µg/L when using the DPD Colorimetric Method #4500 – CL G. from Standard Methods for the Examination of Waters and Wastewater. The permittee will conduct analyses in accordance with this method, or equivalent, and report actual analytical values. Measured values greater than or equal to the minimum quantification level of 130 µg/L will be considered violations of the permit and values less than the minimum quantification level of 130 µg/L will be considered to be in compliance with the permit limitation.

- **pH**. – 6.5-9.0 SU. pH limitations of 6.0-9.0 SU [10 CSR 20-7.015] are not protective of the in-stream Water Quality Standard, which states that water contaminants shall not cause pH to be outside the range of 6.5-9.0 SU.

- **Total Phosphorus**. To Table Rock Lake and Lake Taneycomo, 0.5 mg/L per 10 CSR 20-7.015 (3).

- **Aluminum, Total Recoverable**. Monitoring requirement only. This facility uses chemicals for phosphorous removal that may contain aluminum. A Reasonable Potential Analysis was conducted and found there is no reasonable potential to violate water quality standards in the receiving stream. Monitoring is required to determine if reasonable potential exists for this facility's discharge to exceed water quality standards for Aluminum (Total Recoverable).

- **Iron, Total Recoverable**. Monitoring requirement only. This facility uses chemicals for phosphorous removal that may contain iron; however, a review of Discharge Monitoring Reports indicates the facility did not use chemicals containing iron during the previous permit cycle. As a result, a Reasonable Potential Analysis was not conducted due to lack of data and monitoring is required to determine if reasonable potential exists for this facility's discharge to exceed water quality standards for Iron (Total Recoverable).

Sampling Frequency Justification:
Sampling and Reporting Frequency was reduced from monthly to quarterly. Sampling for *E. coli* is set at quarterly per 10 CSR 20-7.015(9)(D)6.C.

Sampling Type Justification:
As per 10 CSR 20-7.015, BOD_5 and TSS samples collected for sand filters may be grab samples. Grab samples must be collected for pH, Ammonia as N, *E. coli*, TRC, and Total Phosphorus. This is due to the holding time restriction for *E. coli*, the volatility of Ammonia and TRC, and the fact that pH cannot be preserved and must be sampled in the field. As Ammonia and Total Phosphorus samples must be immediately preserved with acid, these samples are to be collected as a grab. For further information on sampling and testing methods please review 10 CSR 20-7.015(9)(D) 2.

OUTFALL #001 – GENERAL CRITERIA CONSIDERATIONS:
In accordance with 40 CFR 122.44(d)(1), effluent limitations shall be placed into the permit for those pollutants which have been determined to cause, have the reasonable potential to cause, or contribute to an excursion above any State water quality standard, including State narrative criteria for water quality. The rule further states that pollutants which have been determined to cause, have the reasonable potential to cause, or contribute to an excursion above a narrative criterion within an applicable State water quality standard, the permit shall contain a numeric effluent limitation to protect that narrative criterion. In order to comply with this regulation, the permit writer will complete reasonable potential determinations on whether the discharge will violate any of the general criteria listed in 10 CSR 20-7.031(4). These specific requirements are listed below followed by derivation and discussion (the lettering matches that of the rule itself, under 10 CSR 20-7.031(4)). It should also be noted that Section 644.076.1, RSMo as well as Section D – Administrative Requirements of Standard Conditions Part I of this permit states that it shall be unlawful for any person to cause or permit any discharge of water contaminants from any water contaminant or point source located in Missouri that is in violation of sections 644.006 to 644.141 of the Missouri Clean Water Law or any standard, rule or regulation promulgated by the commission.

(A) Waters shall be free from substances in sufficient amounts to cause the formation of putrescent, unsightly or harmful bottom deposits or prevent full maintenance of beneficial uses. The discharge from this facility is made up of treated domestic wastewater. Based on a review of a Report of Compliance Inspection for the inspection conducted on September 24, 2014, no evidence of an excursion of this criterion has been observed by the Department in the past and the facility has not disclosed any other information related to the characteristics of the discharge on their permit application which has the potential to cause or contribute to an excursion of this narrative criterion. Additionally, this facility utilizes secondary treatment technology and is currently in compliance with the secondary treatment technology based effluent limits established in this permit and there has been no indication to the Department that the stream has had issues maintaining beneficial uses as a result of this discharge. Based on the information reviewed during the drafting of this permit, these final effluent limitations appear to have protected against the excursion of this criterion in the past. Therefore, the discharge does not have the reasonable potential to cause or contribute to an excursion of this criterion.
(B) Waters shall be free from oil, scum and floating debris in sufficient amounts to be unsightly or prevent full maintenance of beneficial uses. Please see (A) above as justification is the same.
(C) Waters shall be free from substances in sufficient amounts to cause unsightly color or turbidity, offensive odor or prevent full maintenance of beneficial uses. Please see (A) above as justification is the same.
(D) Waters shall be free from substances or conditions in sufficient amounts to result in toxicity to human, animal or aquatic life. This permit contains final effluent limitations which are protective of both acute and chronic toxicity for various pollutants that are either expected to be discharged by domestic wastewater facilities or that were disclosed by this facility on the application for permit coverage. Based on the information reviewed during the drafting of this permit, it has been determined if the facility meets final effluent limitations established in this permit, there is no reasonable potential for the discharge to cause an excursion of this criterion.
(E) There shall be no significant human health hazard from incidental contact with the water. Please see (D) above as justification is the same.
(F) There shall be no acute toxicity to livestock or wildlife watering. Please see (D) above as justification is the same.
(G) Waters shall be free from physical, chemical or hydrologic changes that would impair the natural biological community. Please see (A) above as justification is the same.

(H) Waters shall be free from used tires, car bodies, appliances, demolition debris, used vehicles or equipment and solid waste as defined in Missouri's Solid Waste Law, section 260.200, RSMo, except as the use of such materials is specifically permitted pursuant to section 260.200-260.247. The discharge from this facility is made up of treated domestic wastewater. No evidence of an excursion of this criterion has been observed by the Department in the past and the facility has not disclosed any other information related to the characteristics of the discharge on their permit application which has the potential to cause or contribute to an excursion of this narrative criterion. Additionally, any solid wastes received or produced at this facility are wholly contained in appropriate storage facilities, are not discharged, and are disposed of offsite. This discharge is subject to Standard Conditions Part III, which contains requirements for the management and disposal of sludge to prevent its discharge. Therefore, this discharge does not have reasonable potential to cause or contribute to an excursion of this criterion.

Part VII – Cost Analysis for Compliance

Pursuant to Section 644.145, RSMo., the Department is required to determine whether a permit or decision is affordable and makes a "finding of affordability" for certain permitting and enforcement decisions. This requirement applies to discharges from combined or separate sanitary sewer systems or publically-owned treatment works.

☒ - The Department is not required to complete a cost analysis for compliance because the facility is not a combined or separate sanitary sewer system for a publically-owned treatment works.

Part VIII – Administrative Requirements

On the basis of preliminary staff review and the application of applicable standards and regulations, the Department, as administrative agent for the Missouri Clean Water Commission, proposes to issue a permit(s) subject to certain effluent limitations, schedules, and special conditions contained herein and within the operating permit. The proposed determinations are tentative pending public comment.

PERMIT SYNCHRONIZATION:
The Department of Natural Resources is currently undergoing a synchronization process for operating permits. Permits are normally issued on a five-year term, but to achieve synchronization many permits will need to be issued for less than the full five years allowed by regulation. The intent is that all permits within a watershed will move through the Watershed Based Management (WBM) cycle together will all expire in the same fiscal year. This will allow further streamlining by placing multiple permits within a smaller geographic area on public notice simultaneously, thereby reducing repeated administrative efforts. This will also allow the Department to explore a watershed based permitting effort at some point in the future. Renewal applications must continue to be submitted within 180 days of expiration, however, in instances where effluent data from the previous renewal is less than 4 years old, that data may be re-submitted to meet the requirements of the renewal application. If the permit provides a schedule of compliance for meeting new water quality based effluent limits beyond the expiration date of the permit, the time remaining in the schedule of compliance will be allotted in the renewed permit. With permit synchronization, this permit will expire in the 3rd Quarter of calendar year 2023.

PUBLIC NOTICE:
The Department shall give public notice that a draft permit has been prepared and its issuance is pending. Additionally, public notice will be issued if a public hearing is to be held because of a significant degree of interest in and water quality concerns related to a draft permit. No public notice is required when a request for a permit modification or termination is denied; however, the requester and permittee must be notified of the denial in writing. The Department must issue public notice of a pending operating permit or of a new or reissued statewide general permit. The public comment period is the length of time not less than 30 days following the date of the public notice which interested persons may submit written comments about the proposed permit. For persons wanting to submit comments regarding this proposed operating permit, then please refer to the Public Notice page located at the front of this draft operating permit. The Public Notice page gives direction on how and where to submit appropriate comments.

☒ - The Public Notice period for this operating permit was from March 30, 2018 to April 30, 2018. No responses received.

DATE OF FACT SHEET: MARCH 13, 2018

COMPLETED BY:

ASHLEY KEELY, ENVIRONMENTAL SPECIALIST
MISSOURI DEPARTMENT OF NATURAL RESOURCES
WATER PROTECTION PROGRAM
OPERATING PERMITS SECTION - DOMESTIC WASTEWATER UNIT
(573) 751-7326
ASHLEY.KEELY@DNR.MO.GOV

Appendices

APPENDIX – RPA RESULTS:

Parameter	CMC*	RWC Acute*	CCC*	RWC Chronic*	n**	Range max/min	CV***	MF	RP Yes/No
Total Ammonia as Nitrogen (Summer) mg/L	12.1	0.35	1.5	0.35	18	0.2/0.04	0.39	1.75	NO
Total Ammonia as Nitrogen (Winter) mg/L	12.1	21.03	3.1	21.03	16	3.23/0.01	1.84	6.51	YES
Aluminum, Total Recoverable	750.0	2.43	NA	NA	34	0.64/0.005	1.7	3.79	NO

N/A – Not Applicable
* - Units are (µg/L) unless otherwise noted.
** - If the number of samples is 10 or greater, then the CV value must be used in the WQBEL for the applicable constituent.
*** - Coefficient of Variation (CV) is calculated by dividing the Standard Deviation of the sample set by the Mean of the same sample set.
RWC – Receiving Water Concentration. It is the concentration of a toxicant or the parameter toxicity in the receiving water after mixing (if applicable).
n – Is the number of samples.
MF – Multiplying Factor. 99% Confidence Level and 99% Probability Basis.
RP – Reasonable Potential. It is where an effluent is projected or calculated to cause an excursion above a water quality standard based on a number of factors including, as a minimum, the four factors listed in 40 CFR 122.44(d)(1)(ii).

Reasonable Potential Analysis is conducted as per (TSD, EPA/505/2-90-001, Section 3.3.2). A more detailed version including calculations of this RPA is available upon request.

APPENDIX – ALTERNATIVE:

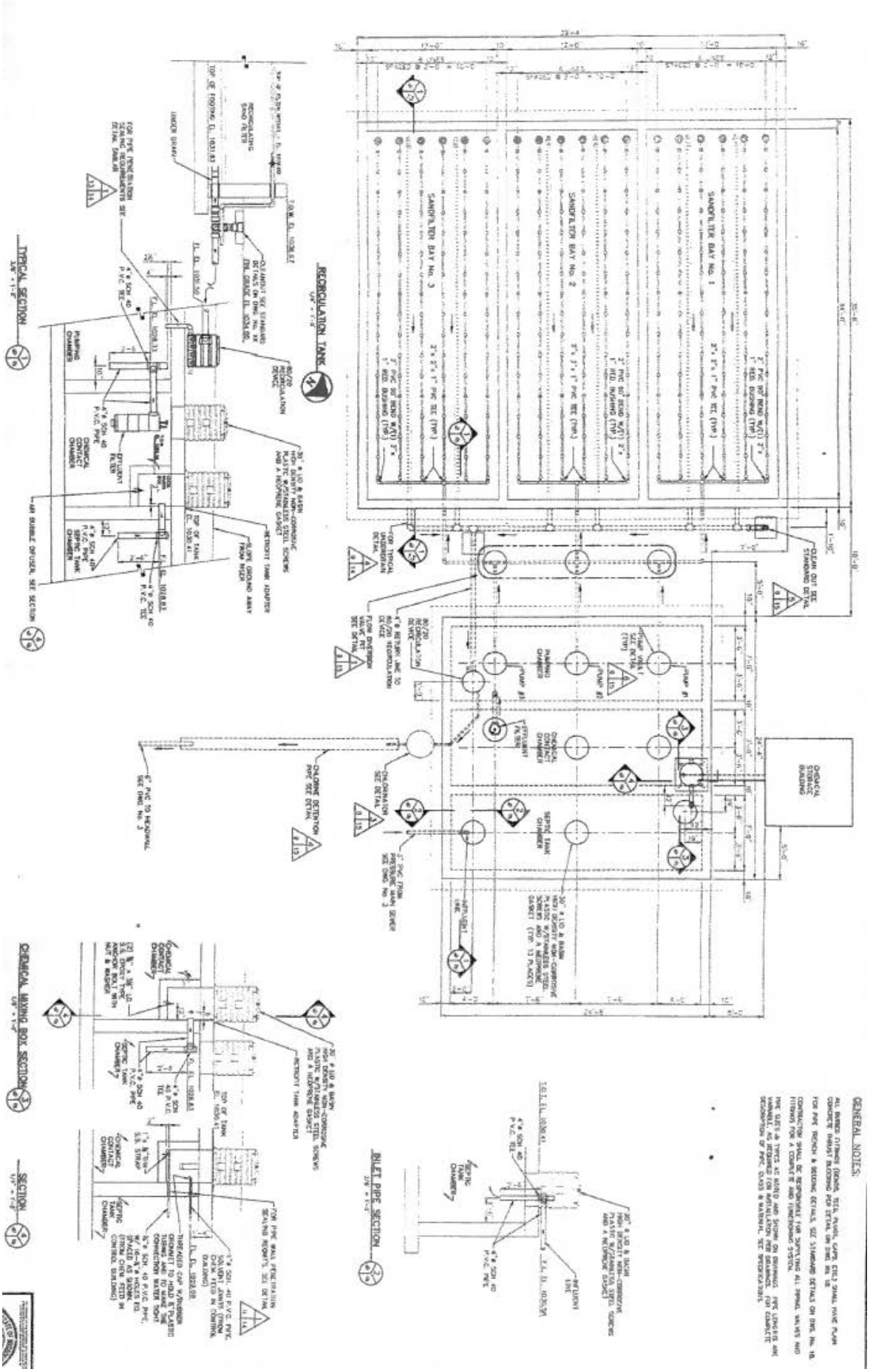

STANDARD CONDITIONS FOR NPDES PERMITS
ISSUED BY
THE MISSOURI DEPARTMENT OF NATURAL RESOURCES
MISSOURI CLEAN WATER COMMISSION
REVISED
AUGUST 1, 2014

These Standard Conditions incorporate permit conditions as required by 40 CFR 122.41 or other applicable state statutes or regulations. These minimum conditions apply unless superseded by requirements specified in the permit.

Part I – General Conditions
Section A – Sampling, Monitoring, and Recording

1. **Sampling Requirements.**
   a. Samples and measurements taken for the purpose of monitoring shall be representative of the monitored activity.
   b. All samples shall be taken at the outfall(s) or Missouri Department of Natural Resources (Department) approved sampling location(s), and unless specified, before the effluent joins or is diluted by any other body of water or substance.

2. **Monitoring Requirements**.
   a. Records of monitoring information shall include:
      i. The date, exact place, and time of sampling or measurements;
      ii. The individual(s) who performed the sampling or measurements;
      iii. The date(s) analyses were performed;
      iv. The individual(s) who performed the analyses;
      v. The analytical techniques or methods used; and
      vi. The results of such analyses.
   b. If the permittee monitors any pollutant more frequently than required by the permit at the location specified in the permit using test procedures approved under 40 CFR Part 136, or another method required for an industry-specific waste stream under 40 CFR subchapters N or O, the results of such monitoring shall be included in the calculation and reported to the Department with the discharge monitoring report data (DMR) submitted to the Department pursuant to Section B, paragraph 7.

3. **Sample and Monitoring Calculations.** Calculations for all sample and monitoring results which require averaging of measurements shall utilize an arithmetic mean unless otherwise specified in the permit.

4. **Test Procedures**. The analytical and sampling methods used shall conform to the reference methods listed in 10 CSR 20-7.015 unless alternates are approved by the Department. The facility shall use sufficiently sensitive analytical methods for detecting, identifying, and measuring the concentrations of pollutants. The facility shall ensure that the selected methods are able to quantify the presence of pollutants in a given discharge at concentrations that are low enough to determine compliance with Water Quality Standards in 10 CSR 20-7.031 or effluent limitations unless provisions in the permit allow for other alternatives. A method is "sufficiently sensitive" when; 1) the method minimum level is at or below the level of the applicable water quality criterion for the pollutant or, 2) the method minimum level is above the applicable water quality criterion, but the amount of pollutant in a facility's discharge is high enough that the method detects and quantifies the level of pollutant in the discharge, or 3) the method has the lowest minimum level of the analytical methods approved under 10 CSR 20-7.015. These methods are also required for parameters that are listed as monitoring only, as the data collected may be used to determine if limitations need to be established. A permittee is responsible for working with their contractors to ensure that the analysis performed is sufficiently sensitive.

5. **Record Retention.** Except for records of monitoring information required by the permit related to the permittee's sewage sludge use and disposal activities, which shall be retained for a period of at least five (5) years (or longer as required by 40 CFR part 503), the permittee shall retain records of all monitoring information, including all calibration and maintenance records and all original strip chart recordings for continuous monitoring instrumentation, copies of all reports required by the permit, and records of all data used to complete the application for the permit, for a period of at least three (3) years from the date of the sample, measurement, report or application. This period may be extended by request of the Department at any time.

6. **Illegal Activities.**
   a. The Federal Clean Water Act provides that any person who falsifies, tampers with, or knowingly renders inaccurate any monitoring device or method required to be maintained under the permit shall, upon conviction, be punished by a fine of not more than $10,000, or by imprisonment for not more than two (2) years, or both. If a conviction of a person is for a violation committed after a first conviction of such person under this paragraph, punishment is a fine of not more than $20,000 per day of violation, or by imprisonment of not more than four (4) years, or both.
   b. The Missouri Clean Water Law provides that any person or who falsifies, tampers with, or knowingly renders inaccurate any monitoring device or method required to be maintained pursuant to sections 644.006 to 644.141 shall, upon conviction, be punished by a fine of not more than $10,000, or by imprisonment for not more than six (6) months, or by both. Second and successive convictions for violation under this paragraph by any person shall be punished by a fine of not more than $50,000 per day of violation, or by imprisonment for not more than two (2) years, or both.

Section B – Reporting Requirements

1. **Planned Changes.**
   a. The permittee shall give notice to the Department as soon as possible of any planned physical alterations or additions to the permitted facility when:
      i. The alteration or addition to a permitted facility may meet one of the criteria for determining whether a facility is a new source in 40 CFR 122.29(b); or
      ii. The alteration or addition could significantly change the nature or increase the quantity of pollutants discharged. This notification applies to pollutants which are subject neither to effluent limitations in the permit, nor to notification requirements under 40 CFR 122.42;
      iii. The alteration or addition results in a significant change in the permittee's sludge use or disposal practices, and such alteration, addition, or change may justify the application of permit conditions that are different from or absent in the existing permit, including notification of additional use or disposal sites not reported during the permit application process or not reported pursuant to an approved land application plan;
      iv. Any facility expansions, production increases, or process modifications which will result in a new or substantially different discharge or sludge characteristics must be reported to the Department 60 days before the facility or process modification begins. Notification may be accomplished by application for a new permit. If the discharge does not violate effluent limitations specified in the permit, the facility is to submit a notice to the Department of the changed discharge at least 30 days before such changes. The Department may require a construction permit and/or permit modification as a result of the proposed changes at the facility.

2. **Non-compliance Reporting.**
   a. The permittee shall report any noncompliance which may endanger health or the environment. Relevant information shall be provided orally or via the current electronic method approved by the Department, within 24 hours from the time the permittee becomes aware of the circumstances, and shall be reported to the appropriate Regional Office during normal business hours or the Environmental Emergency Response hotline at 573-634-2436 outside of normal business hours. A written submission shall also be provided within five (5) business days of the time the permittee becomes aware of the circumstances. The written submission shall contain a description of the noncompliance and its cause; the period of noncompliance, including exact dates and times, and if the noncompliance has not been corrected, the anticipated time it is expected to continue; and steps taken or planned to reduce, eliminate, and prevent reoccurrence of the noncompliance.

b. The following shall be included as information which must be reported within 24 hours under this paragraph.
   i. Any unanticipated bypass which exceeds any effluent limitation in the permit.
   ii. Any upset which exceeds any effluent limitation in the permit.
   iii. Violation of a maximum daily discharge limitation for any of the pollutants listed by the Department in the permit required to be reported within 24 hours.
c. The Department may waive the written report on a case-by-case basis for reports under paragraph 2. b. of this section if the oral report has been received within 24 hours.

3. **Anticipated Noncompliance**. The permittee shall give advance notice to the Department of any planned changes in the permitted facility or activity which may result in noncompliance with permit requirements. The notice shall be submitted to the Department 60 days prior to such changes or activity.

4. **Compliance Schedules.** Reports of compliance or noncompliance with, or any progress reports on, interim and final requirements contained in any compliance schedule of the permit shall be submitted no later than 14 days following each schedule date. The report shall provide an explanation for the instance of noncompliance and a proposed schedule or anticipated date, for achieving compliance with the compliance schedule requirement.

5. **Other Noncompliance.** The permittee shall report all instances of noncompliance not reported under paragraphs 2, 3, and 6 of this section, at the time monitoring reports are submitted. The reports shall contain the information listed in paragraph 2. a. of this section.

6. **Other Information**. Where the permittee becomes aware that it failed to submit any relevant facts in a permit application, or submitted incorrect information in a permit application or in any report to the Department, it shall promptly submit such facts or information.

7. **Discharge Monitoring Reports.**
   a. Monitoring results shall be reported at the intervals specified in the permit.
   b. Monitoring results must be reported to the Department via the current method approved by the Department, unless the permittee has been granted a waiver from using the method. If the permittee has been granted a waiver, the permittee must use forms provided by the Department.
   c. Monitoring results shall be reported to the Department no later than the 28th day of the month following the end of the reporting period.

Section C – Bypass/Upset Requirements

1. **Definitions.**
   a. *Bypass*: the intentional diversion of waste streams from any portion of a treatment facility, except in the case of blending.
   b. *Severe Property Damage*: substantial physical damage to property, damage to the treatment facilities which causes them to become inoperable, or substantial and permanent loss of natural resources which can reasonably be expected to occur in the absence of a bypass. Severe property damage does not mean economic loss caused by delays in production.
   c. *Upset*: an exceptional incident in which there is unintentional and temporary noncompliance with technology based permit effluent limitations because of factors beyond the reasonable control of the permittee. An upset does not include noncompliance to the extent caused by operational error, improperly designed treatment facilities, inadequate treatment facilities, lack of preventive maintenance, or careless or improper operation.

2. **Bypass Requirements.**
   a. Bypass not exceeding limitations. The permittee may allow any bypass to occur which does not cause effluent limitations to be exceeded, but only if it also is for essential maintenance to assure efficient operation. These bypasses are not subject to the provisions of paragraphs 2. b. and 2. c. of this section.
   b. Notice.
      i. Anticipated bypass. If the permittee knows in advance of the need for a bypass, it shall submit prior notice, if possible at least 10 days before the date of the bypass.
      ii. Unanticipated bypass. The permittee shall submit notice of an unanticipated bypass as required in Section B – Reporting Requirements, paragraph 5 (24-hour notice).
   c. Prohibition of bypass.
      i. Bypass is prohibited, and the Department may take enforcement action against a permittee for bypass, unless:
         1. Bypass was unavoidable to prevent loss of life, personal injury, or severe property damage;
         2. There were no feasible alternatives to the bypass, such as the use of auxiliary treatment facilities, retention of untreated wastes, or maintenance during normal periods of equipment downtime. This condition is not satisfied if adequate back-up equipment should have been installed in the exercise of reasonable engineering judgment to prevent a bypass which occurred during normal periods of equipment downtime or preventive maintenance; and
         3. The permittee submitted notices as required under paragraph 2. b. of this section.
      ii. The Department may approve an anticipated bypass, after considering its adverse effects, if the Department determines that it will meet the three (3) conditions listed above in paragraph 2. c. i. of this section.

3. **Upset Requirements.**
   a. Effect of an upset. An upset constitutes an affirmative defense to an action brought for noncompliance with such technology based permit effluent limitations if the requirements of paragraph 3. b. of this section are met. No determination made during administrative review of claims that noncompliance was caused by upset, and before an action for noncompliance, is final administrative action subject to judicial review.
   b. Conditions necessary for a demonstration of upset. A permittee who wishes to establish the affirmative defense of upset shall demonstrate, through properly signed, contemporaneous operating logs, or other relevant evidence that:
      i. An upset occurred and that the permittee can identify the cause(s) of the upset;
      ii. The permitted facility was at the time being properly operated; and
      iii. The permittee submitted notice of the upset as required in Section B – Reporting Requirements, paragraph 2. b. ii. (24-hour notice).
      iv. The permittee complied with any remedial measures required under Section D – Administrative Requirements, paragraph 4.
   c. Burden of proof. In any enforcement proceeding, the permittee seeking to establish the occurrence of an upset has the burden of proof.

Section D – Administrative Requirements

1. **Duty to Comply.** The permittee must comply with all conditions of this permit. Any permit noncompliance constitutes a violation of the Missouri Clean Water Law and Federal Clean Water Act and is grounds for enforcement action; for permit termination, revocation and reissuance, or modification; or denial of a permit renewal application.
   a. The permittee shall comply with effluent standards or prohibitions established under section 307(a) of the Federal Clean Water Act for toxic pollutants and with standards for sewage sludge use or disposal established under section 405(d) of the CWA within the time provided in the regulations that establish these standards or prohibitions or standards for sewage sludge use or disposal, even if the permit has not yet been modified to incorporate the requirement.
   b. The Federal Clean Water Act provides that any person who violates section 301, 302, 306, 307, 308, 318 or 405 of the Act, or any permit condition or limitation implementing any such sections in a permit issued under section 402, or any requirement imposed in a pretreatment program approved under sections 402(a)(3) or 402(b)(8) of the Act, is subject to a civil penalty not to exceed $25,000 per day for each violation. The Federal Clean Water Act provides that any person who negligently violates sections 301, 302, 306, 307, 308, 318, or 405 of the Act, or any condition or limitation implementing any of such sections in a permit issued under section 402 of the Act, or any requirement

imposed in a pretreatment program approved under section 402(a)(3) or 402(b)(8) of the Act, is subject to criminal penalties of $2,500 to $25,000 per day of violation, or imprisonment of not more than one (1) year, or both. In the case of a second or subsequent conviction for a negligent violation, a person shall be subject to criminal penalties of not more than $50,000 per day of violation, or by imprisonment of not more than two (2) years, or both. Any person who knowingly violates such sections, or such conditions or limitations is subject to criminal penalties of $5,000 to $50,000 per day of violation, or imprisonment for not more than three (3) years, or both. In the case of a second or subsequent conviction for a knowing violation, a person shall be subject to criminal penalties of not more than $100,000 per day of violation, or imprisonment of not more than six (6) years, or both. Any person who knowingly violates section 301, 302, 303, 306, 307, 308, 318 or 405 of the Act, or any permit condition or limitation implementing any of such sections in a permit issued under section 402 of the Act, and who knows at that time that he thereby places another person in imminent danger of death or serious bodily injury, shall, upon conviction, be subject to a fine of not more than $250,000 or imprisonment of not more than 15 years, or both. In the case of a second or subsequent conviction for a knowing endangerment violation, a person shall be subject to a fine of not more than $500,000 or by imprisonment of not more than 30 years, or both. An organization, as defined in section 309(c)(3)(B)(iii) of the CWA, shall, upon conviction of violating the imminent danger provision, be subject to a fine of not more than $1,000,000 and can be fined up to $2,000,000 for second or subsequent convictions.

c. Any person may be assessed an administrative penalty by the EPA Director for violating section 301, 302, 306, 307, 308, 318 or 405 of this Act, or any permit condition or limitation implementing any of such sections in a permit issued under section 402 of this Act. Administrative penalties for Class I violations are not to exceed $10,000 per violation, with the maximum amount of any Class I penalty assessed not to exceed $25,000. Penalties for Class II violations are not to exceed $10,000 per day for each day during which the violation continues, with the maximum amount of any Class II penalty not to exceed $125,000.

d. It is unlawful for any person to cause or permit any discharge of water contaminants from any water contaminant or point source located in Missouri in violation of sections 644.006 to 644.141 of the Missouri Clean Water Law, or any standard, rule or regulation promulgated by the commission. In the event the commission or the director determines that any provision of sections 644.006 to 644.141 of the Missouri Clean Water Law or standard, rules, limitations or regulations promulgated pursuant thereto, or permits issued by, or any final abatement order, other order, or determination made by the commission or the director, or any filing requirement pursuant to sections 644.006 to 644.141 of the Missouri Clean Water Law or any other provision which this state is required to enforce pursuant to any federal water pollution control act, is being, was, or is in imminent danger of being violated, the commission or director may cause to have instituted a civil action in any court of competent jurisdiction for the injunctive relief to prevent any such violation or further violation or for the assessment of a penalty not to exceed $10,000 per day for each day, or part thereof, the violation occurred and continues to occur, or both, as the court deems proper. Any person who willfully or negligently commits any violation in this paragraph shall, upon conviction, be punished by a fine of not less than $2,500 nor more than $25,000 per day of violation, or by imprisonment for not more than one year, or both. Second and successive convictions for violation of the same provision of this paragraph by any person shall be punished by a fine of not more than $50,000 per day of violation, or by imprisonment for not more than two (2) years, or both.

2. **Duty to Reapply.**
   a. If the permittee wishes to continue an activity regulated by this permit after the expiration date of this permit, the permittee must apply for and obtain a new permit.
   b. A permittee with a currently effective site-specific permit shall submit an application for renewal at least 180 days before the expiration date of the existing permit, unless permission for a later date has been granted by the Department. (The Department shall not grant permission for applications to be submitted later than the expiration date of the existing permit.)
   c. A permittees with currently effective general permit shall submit an application for renewal at least 30 days before the existing permit expires, unless the permittee has been notified by the Department that an earlier application must be made. The Department may grant permission for a later submission date. (The Department shall not grant permission for applications to be submitted later than the expiration date of the existing permit.)

3. **Need to Halt or Reduce Activity Not a Defense.** It shall not be a defense for a permittee in an enforcement action that it would have been necessary to halt or reduce the permitted activity in order to maintain compliance with the conditions of this permit.

4. **Duty to Mitigate.** The permittee shall take all reasonable steps to minimize or prevent any discharge or sludge use or disposal in violation of this permit which has a reasonable likelihood of adversely affecting human health or the environment.

5. **Proper Operation and Maintenance**. The permittee shall at all times properly operate and maintain all facilities and systems of treatment and control (and related appurtenances) which are installed or used by the permittee to achieve compliance with the conditions of this permit. Proper operation and maintenance also includes adequate laboratory controls and appropriate quality assurance procedures. This provision requires the operation of back-up or auxiliary facilities or similar systems which are installed by a permittee only when the operation is necessary to achieve compliance with the conditions of the permit.

6. **Permit Actions.**
   a. Subject to compliance with statutory requirements of the Law and Regulations and applicable Court Order, this permit may be modified, suspended, or revoked in whole or in part during its term for cause including, but not limited to, the following:
      i. Violations of any terms or conditions of this permit or the law;
      ii. Having obtained this permit by misrepresentation or failure to disclose fully any relevant facts;
      iii. A change in any circumstances or conditions that requires either a temporary or permanent reduction or elimination of the authorized discharge; or
      iv. Any reason set forth in the Law or Regulations.
   b. The filing of a request by the permittee for a permit modification, revocation and reissuance, or termination, or a notification of planned changes or anticipated noncompliance does not stay any permit condition.

7. **Permit Transfer.**
   a. Subject to 10 CSR 20-6.010, an operating permit may be transferred upon submission to the Department of an application to transfer signed by the existing owner and the new owner, unless prohibited by the terms of the permit. Until such time the permit is officially transferred, the original permittee remains responsible for complying with the terms and conditions of the existing permit.
   b. The Department may require modification or revocation and reissuance of the permit to change the name of the permittee and incorporate such other requirements as may be necessary under the Missouri Clean Water Law or the Federal Clean Water Act.
   c. The Department, within 30 days of receipt of the application, shall notify the new permittee of its intent to revoke or reissue or transfer the permit.

8. **Toxic Pollutants.** The permittee shall comply with effluent standards or prohibitions established under section 307(a) of the Federal Clean Water Act for toxic pollutants and with standards for sewage sludge use or disposal established under section 405(d) of the Federal Clean Water Act within the time provided in the regulations that establish these standards or prohibitions or standards for sewage sludge use or disposal, even if the permit has not yet been modified to incorporate the requirement.

9. **Property Rights.** This permit does not convey any property rights of any sort, or any exclusive privilege.

10. **Duty to Provide Information.** The permittee shall furnish to the Department, within a reasonable time, any information which the Department may request to determine whether cause exists for modifying, revoking and reissuing, or terminating this permit or to determine compliance with this permit. The permittee shall also furnish to the Department upon request, copies of records required to be kept by this permit.

11. **Inspection and Entry.** The permittee shall allow the Department, or an authorized representative (including an authorized contractor acting as a representative of the Department), upon presentation of credentials and other documents as may be required by law, to:
    a. Enter upon the permittee's premises where a regulated facility or activity is located or conducted, or where records must be kept under the conditions of the permit;
    b. Have access to and copy, at reasonable times, any records that must be kept under the conditions of this permit;
    c. Inspect at reasonable times any facilities, equipment (including monitoring and control equipment), practices, or operations regulated or required under this permit; and
    d. Sample or monitor at reasonable times, for the purposes of assuring permit compliance or as otherwise authorized by the Federal Clean Water Act or Missouri Clean Water Law, any substances or parameters at any location.

12. **Closure of Treatment Facilities.**
    a. Persons who cease operation or plan to cease operation of waste, wastewater, and sludge handling and treatment facilities shall close the facilities in accordance with a closure plan approved by the Department.
    b. Operating Permits under 10 CSR 20-6.010 or under 10 CSR 20-6.015 are required until all waste, wastewater, and sludges have been disposed of in accordance with the closure plan approved by the Department and any disturbed areas have been properly stabilized. Disturbed areas will be considered stabilized when perennial vegetation, pavement, or structures using permanent materials cover all areas that have been disturbed. Vegetative cover, if used, shall be at least 70% plant density over 100% of the disturbed area.

13. **Signatory Requirement.**
    a. All permit applications, reports required by the permit, or information requested by the Department shall be signed and certified. (See 40 CFR 122.22 and 10 CSR 20-6.010)
    b. The Federal Clean Water Act provides that any person who knowingly makes any false statement, representation, or certification in any record or other document submitted or required to be maintained under this permit, including monitoring reports or reports of compliance or non-compliance shall, upon conviction, be punished by a fine of not more than $10,000 per violation, or by imprisonment for not more than six (6) months per violation, or by both.
    c. The Missouri Clean Water Law provides that any person who knowingly makes any false statement, representation or certification in any application, record, report, plan, or other document filed or required to be maintained pursuant to sections 644.006 to 644.141 shall, upon conviction, be punished by a fine of not more than ten thousand dollars, or by imprisonment for not more than six months, or by both.

14. **Severability.** The provisions of the permit are severable, and if any provision of the permit, or the application of any provision of the permit to any circumstance, is held invalid, the application of such provision to other circumstances, and the remainder of the permit, shall not be affected thereby.

STANDARD CONDITIONS FOR NPDES PERMITS
ISSUED BY
THE MISSOURI DEPARTMENT OF NATURAL RESOURCES
MISSOURI CLEAN WATER COMMISSION
March 1, 2015

PART III – SLUDGE AND BIOSOLIDS FROM DOMESTIC AND INDUSTRIAL WASTEWATER TREATMENT FACILITIES

SECTION A – GENERAL REQUIREMENTS

1. This permit pertains to sludge requirements under the Missouri Clean Water Law and regulation for domestic wastewater and industrial process wastewater. This permit also incorporates applicable federal sludge disposal requirements under 40 CFR 503 for domestic wastewater. The Environmental Protection Agency (EPA) has principal authority for permitting and enforcement of the federal sludge regulations under 40 CFR 503 for domestic wastewater. EPA has reviewed and accepted these standard sludge conditions. EPA may choose to issue a separate sludge addendum to this permit or a separate federal sludge permit at their discretion to further address the federal requirements.
2. These PART III Standard Conditions apply only to sludge and biosolids generated at domestic wastewater treatment facilities, including public owned treatment works (POTW), privately owned facilities and sludge or biosolids generated at industrial facilities.
3. Sludge and Biosolids Use and Disposal Practices:
    a. The permittee is authorized to operate the sludge and biosolids treatment, storage, use, and disposal facilities listed in the facility description of this permit.
    b. The permittee shall not exceed the design sludge volume listed in the facility description and shall not use sludge disposal methods that are not listed in the facility description, without prior approval of the permitting authority.
    c. The permittee is authorized to operate the storage, treatment or generating sites listed in the Facility Description section of this permit.
4. Sludge Received from other Facilities:
    a. Permittees may accept domestic wastewater sludge from other facilities including septic tank pumpings from residential sources as long as the design sludge volume is not exceeded and the treatment facility performance is not impaired.
    b. The permittee shall obtain a signed statement from the sludge generator or hauler that certifies the type and source of the sludge
5. These permit requirements do not supersede nor remove liability for compliance with county and other local ordinances.
6. These permit requirements do not supersede nor remove liability for compliance with other environmental regulations such as odor emissions under the Missouri Air Pollution Control Law and regulations.
7. This permit may (after due process) be modified, or alternatively revoked and reissued, to comply with any applicable sludge disposal standard or limitation issued or approved under Section 405(d) of the Clean Water Actor under Chapter 644 RSMo.
8. In addition to STANDARD CONDITIONS, the Department may include sludge limitations in the special conditions portion or other sections of a site specific permit.
9. Alternate Limits in the Site Specific Permit.
   Where deemed appropriate, the Department may require an individual site specific permit in order to authorize alternate limitations:
    a. A site specific permit must be obtained for each operating location, including application sites.
    b. To request a site specific permit, an individual permit application, permit fee, and supporting documents shall be submitted for each operating location. This shall include a detailed sludge/biosolids management plan or engineering report.
10. Exceptions to these Standard Conditions may be authorized on a case-by-case basis by the Department, as follows:
    a. The Department will prepare a permit modification and follow permit notice provisions as applicable under 10 CSR 20-6.020, 40 CFR 124.10, and 40 CFR 501.15(a)(2)(ix)(E). This includes notification of the owner of the property located adjacent to each land application site, where appropriate.
    b. Exceptions cannot be granted where prohibited by the federal sludge regulations under 40 CFR 503.

SECTION B – DEFINITIONS

1. Best Management Practices include agronomic loading rates, soil conservation practices and other site restrictions.
2. Biosolids means organic fertilizer or soil amendment produced by the treatment of domestic wastewater sludge.
3. Biosolids land application facility is a facility where biosolids are spread onto the land at agronomic rates for production of food or fiber. The facility includes any structures necessary to store the biosolids until soil, weather, and crop conditions are favorable for land application.
4. Class A biosolids means a material that has met the Class A pathogen reduction requirements or equivalent treatment by a Process to Further Reduce Pathogens (PFRP) in accordance with 40 CFR 503.
5. Class B biosolids means a material that has met the Class B pathogen reduction requirements or equivalent treatment by a Process to Significantly Reduce Pathogens (PFRP) in accordance with 40 CFR 503.
6. Domestic wastewater means wastewater originating from the sanitary conveniences of residences, commercial buildings, factories and institutions; or co-mingled sanitary and industrial wastewater processed by a (POTW) or a privately owned facility.
7. Industrial wastewater means any wastewater, also known as process water, not defined as domestic wastewater. Per 40 CFR Part 122, process water means any water which, during manufacturing or processing, comes into direct contact with or results from the production or use of any raw material, intermediate product, finished product, byproduct, or waste product.
8. Mechanical treatment plants are wastewater treatment facilities that use mechanical devices to treat wastewater, including septic tanks, sand filters, extended aeration, activated sludge, contact stabilization, trickling filters, rotating biological discs, and other similar facilities. It does not include wastewater treatment lagoons and constructed wetlands for wastewater treatment.
9. Operating location as defined in 10 CSR 20-2.010 is all contiguous lands owned, operated or controlled by one (1) person or by two (2) or more persons jointly or as tenants in common.
10. Plant Available Nitrogen (PAN) is the nitrogen that will be available to plants during the growing seasons after biosolids application.
11. Public contact site is land with a high potential for contact by the public. This includes, but is not limited to, public parks, ball fields, cemeteries, plant nurseries, turf farms, and golf courses.
12. Sludge is the solid, semisolid, or liquid residue removed during the treatment of wastewater. Sludge includes septage removed from septic tanks or equivalent facilities. Sludge does not include carbon coal byproducts (CCBs)
13. Sludge lagoon is part of a mechanical wastewater treatment facility. A sludge lagoon is an earthen basin that receives sludge that has been removed from a wastewater treatment facility. It does not include a wastewater treatment lagoon or sludge treatment units that are not a part of a mechanical wastewater treatment facility.
14. Septage is the material pumped from residential septic tanks and similar treatment works (with a design population of less than 150 people). The standard for biosolids from septage is different from other sludges.

SECTION C – MECHANICAL WASTEWATER TREATMENT FACILITIES

1. Sludge shall be routinely removed from wastewater treatment facilities and handled according to the permit facility description and sludge conditions of this permit.
2. The permittee shall operate the facility so that there is no sludge discharged to waters of the state.
3. Mechanical treatment plants shall have separate sludge storage compartments in accordance with 10 CSR 20, Chapter 8. Failure to remove sludge from these storage compartments on the required design schedule is a violation of this permit.

SECTION D – SLUDGE DISPOSED AT OTHER TREATMENT FACILITY OR CONTRACT HAULER

1. This section applies to permittees that haul sludge to another treatment facility for disposal or use contract haulers to remove and dispose of sludge.
2. Permittees that use contract haulers are responsible for compliance with all the terms of this permit including final disposal, unless the hauler has a separate permit for sludge or biosolids disposal issued by the Department; or the hauler transports the sludge to another permitted treatment facility.
3. Haulers who land apply septage must obtain a state permit.
4. Testing of sludge, other than total solids content, is not required if sludge is hauled to a municipal wastewater treatment facility or other permitted wastewater treatment facility, unless it is required by the accepting facility.

SECTION E – INCINERATION OF SLUDGE

1. Sludge incineration facilities shall comply with the requirements of 40 CFR 503 Subpart E; air pollution control regulations under 10 CSR 10; and solid waste management regulations under 10 CSR 80.
2. Permittee may be authorized under the facility description of this permit to store incineration ash in lagoons or ash ponds. This permit does not authorize the disposal of incineration ash. Incineration ash shall be disposed in accordance with 10 CSR 80; or if the ash is determined to be hazardous with 10 CSR 25.
3. In addition to normal sludge monitoring, incineration facilities shall report the following as part of the annual report, quantity of sludge incinerated, quantity of ash generated, quantity of ash stored, and ash used or disposal method, quantity, and location. Permittee shall also provide the name of the disposal facility and the applicable permit number.

SECTION F – SURFACE DISPOSAL SITES AND SLUDGE LAGOONS

1. Surface disposal sites of domestic facilities shall comply with the requirements in 40 CFR 503 Subpart C; air pollution control regulations under 10 CSR 10; and solid waste management regulations under 10 CSR 80.
2. Sludge storage lagoons are temporary facilities and are not required to obtain a permit as a solid waste management facility under 10 CSR 80. In order to maintain sludge storage lagoons as storage facilities, accumulated sludge must be removed routinely, but not less than once every two years unless an alternate schedule is approved in the permit. The amount of sludge removed will be dependent on sludge generation and accumulation in the facility. Enough sludge must be removed to maintain adequate storage capacity in the facility.
    a. In order to avoid damage to the lagoon seal during cleaning, the permittee may leave a layer of sludge on the bottom of the lagoon, upon prior approval of the Department; or
    b. Permittee shall close the lagoon in accordance with Section H.

SECTION G – LAND APPLICATION

1. The permittee shall not land apply sludge or biosolids unless land application is authorized in the facility description or the special conditions of the issued NPDES permit.
2. Land application sites within a 20 miles radius of the wastewater treatment facility are authorized under this permit when biosolids are applied for beneficial use in accordance with these standard conditions unless otherwise specified in a site specific permit. If the permittee's land application site is greater than a 20 mile radius of the wastewater treatment facility, approval must be granted from the Department.
3. Land application shall not adversely affect a threatened or endangered species or its designated critical habitat.
4. Biosolids shall not be applied unless authorized in this permit or exempted under 10 CSR 20, Chapter 6.
    a. This permit does not authorize the land application of domestic sludge except for when sludge meets the definition of biosolids.
    b. This permit authorizes "Class A or B" biosolids derived from domestic wastewater and/or process water sludge to be land applied onto grass land, crop land, timber or other similar agricultural or silviculture lands at rates suitable for beneficial use as organic fertilizer and soil conditioner.
5. Public Contact Sites:

    Permittees who wish to apply Class A biosolids to public contact sites must obtain approval from the Department after two years of proper operation with acceptable testing documentation that shows the biosolids meet Class A criteria. A shorter length of testing will be allowed with prior approval from the Department. Authorization for land applications must be provided in the special conditions section of this permit or in a separate site specific permit.
    a. After Class B biosolids have been land applied, public access must be restricted for 12 months.
    b. Class B biosolids are only land applied to root crops, home gardens or vegetable crops whose edible parts will not be for human consumption.
6. Agricultural and Silvicultural Sites:

    Septage – Based on Water Quality guide 422 (WQ422) published by the University of Missouri
    a. Haulers that land apply septage must obtain a state permit
    b. Do not apply more than 30,000 gallons of septage per acre per year.
    c. Septage tanks are designed to retain sludge for one to three years which will allow for a larger reduction in pathogens and vectors, as compared to other mechanical type treatment facilities.
    d. To meet Class B sludge requirements, maintain septage at 12 pH for at least thirty (30) minutes before land application. 50 pounds of hydrated lime shall be added to each 1,000 gallons of septage in order to meet pathogen and vector stabilization for septage biosolids applied to crops, pastures or timberland.
    e. Lime is to be added to the pump truck and not directly to the septic tanks, as lime would harm the beneficial bacteria of the septic tank.

Biosolids - Based on Water Quality guide 423, 424, and 425 (WQ423, WQ424, WQ425) published by the University of Missouri;

a. Biosolids shall be monitored to determine the quality for regulated pollutants

b. The number of samples taken is directly related to the amount of sludge produced by the facility (See Section I of these Standard Conditions). Report as dry weight unless otherwise specified in the site specific permit. Samples should be taken only during land application periods. When necessary, it is permissible to mix biosolids with lower concentrations of biosolids as well as other suitable Department approved material to reach the maximum concentration of pollutants allowed.

c. Table 1 gives the maximum concentration allowable to protect water quality standards

TABLE 1

Biosolids ceiling concentration [1]	
Pollutant	Milligrams per kilogram dry weight
Arsenic	75
Cadmium	85
Copper	4,300
Lead	840
Mercury	57
Molybdenum	75
Nickel	420
Selenium	100
Zinc	7,500

[1] Land application is not allowed if the sludge concentration exceeds the maximum limits for any of these pollutants

d. The low metal concentration biosolids has reduced requirements because of its higher quality and can safely be applied for 100 years or longer at typical agronomic loading rates. (See Table 2)

TABLE 2

Biosolids Low Metal Concentration [1]	
Pollutant	Milligrams per kilogram dry weight
Arsenic	41
Cadmium	39
Copper	1,500
Lead	300
Mercury	17
Nickel	420
Selenium	36
Zinc	2,800

[1] You may apply low metal biosolids without tracking cumulative metal limits, provided the cumulative application of biosolids does not exceed 500 dry tons per acre.

e. Each pollutant in Table 3 has an annual and a total cumulative loading limit, based on the allowable pounds per acre for various soil categories.

TABLE 3

Pollutant	CEC 15+		CEC 5 to 15		CEC 0 to 5	
	Annual	Total [1]	Annual	Total [1]	Annual	Total [1]
Arsenic	1.8	36.0	1.8	36.0	1.8	36.0
Cadmium	1.7	35.0	0.9	9.0	0.4	4.5
Copper	66.0	1,335.0	25.0	250.0	12.0	125.0
Lead	13.0	267.0	13.0	267.0	13.0	133.0
Mercury	0.7	15.0	0.7	15.0	0.7	15.0
Nickel	19.0	347.0	19.0	250.0	12.0	125.0
Selenium	4.5	89.0	4.5	44.0	1.6	16.0
Zinc	124.0	2,492.0	50.0	500.0	25.0	250.0

[1] Total cumulative loading limits for soils with equal or greater than 6.0 pH (salt based test) or 6.5 pH (water based test)

TABLE 4 - Guidelines for land application of other trace substances [1]

Cumulative Loading	
Pollutant	Pounds per acre
Aluminum	4,000[2]
Beryllium	100
Cobalt	50
Fluoride	800
Manganese	500
Silver	200
Tin	1,000
Dioxin	(10 ppt in soil)[3]
Other	[4]

[1] Design of land treatment systems for Industrial Waste, 1979. Michael Ray Overcash, North Carolina State University and Land Treatment of Municipal Wastewater, EPA 1981.)

[2] This applies for a soil with a pH between 6.0 and 7.0 (salt based test) or a pH between 6.5 to 7.5 (water based test). Case-by-case review is required for higher pH soils.

[3] Total Dioxin Toxicity Equivalents (TEQ) in soils, based on a risk assessment under 40 CFR 744, May 1998.

[4] Case by case review. Concentrations in sludge should not exceed the 95th percentile of the National Sewage Sludge Survey, EPA, January 2009.

Best Management Practices – Based on Water Quality guide 426 (WQ426) published by the University of Missouri

a. Use best management practices when applying biosolids.
b. Biosolids cannot discharge from the land application site
c. Biosolid application is subject to the Missouri Department of Agriculture State Milk Board concerning grazing restrictions of lactating dairy cattle.
d. Biosolid application must be in accordance with section 4 of the Endangered Species Act.
e. Do not apply more than the agronomic rate of nitrogen needed.
f. The applicator must document the Plant Available Nitrogen (PAN) loadings, available nitrogen in the soil, and crop removal when either of the following occurs: 1) When biosolids are greater than 50,000 mg/kg TN; or 2) When biosolids are land applied at an application rate greater than two dry tons per acre per year.
    i. PAN can be determined as follows and is in accordance with WQ426
    (Nitrate + nitrite nitrogen) + (organic nitrogen x 0.2) + (ammonia nitrogen x volatilization factor[1]).
    [1] Volatilization factor is 0.7 for surface application and 1 for subsurface application.
g. Buffer zones are as follows:
    i. 300 feet of a water supply well, sinkhole, lake, pond, water supply reservoir or water supply intake in a stream;
    ii. 300 feet of a losing stream, no discharge stream, stream stretches designated for whole body contact recreation, wild and scenic rivers, Ozark National Scenic Riverways or outstanding state resource waters as listed in the Water Quality Standards, 10 CSR 20-7.031;
    iii. 150 feet if dwellings;
    iv. 100 feet of wetlands or permanent flowing streams;
    v. 50 feet of a property line or other waters of the state, including intermittent flowing streams.
h. Slope limitation for application sites are as follows;
    i. A slope 0 to 6 percent has no rate limitation
    ii. Applied to a slope 7 to 12 percent, the applicator may apply biosolids when soil conservation practices are used to meet the minimum erosion levels
    iii. Slopes > 12 percent, apply biosolids only when grass is vegetated and maintained with at least 80 percent ground cover at a rate of two dry tons per acre per year or less.
i. No biosolids may be land applied in an area that it is reasonably certain that pollutants will be transported into waters of the state.
j. Do not apply biosolids to sites with soil that is snow covered, frozen or saturated with liquid without prior approval by the Department.
k. Biosolids / sludge applicators must keep detailed records up to five years.

SECTION H – CLOSURE REQUIREMENTS

1. This section applies to all wastewater facilities (mechanical, industrial, and lagoons) and sludge or biosolids storage and treatment facilities and incineration ash ponds. It does not apply to land application sites.
2. Permittees of a domestic wastewater facility who plan to cease operation must obtain Department approval of a closure plan which addresses proper removal and disposal of all residues, including sludge, biosolids. Mechanical plants, sludge lagoons, ash ponds and other storage structures must obtain approval of a closure plan from the Department. Permittee must maintain this permit until the facility is closed in accordance with the approved closure plan per 10 CSR 20 – 6. 010 and 10 CSR 20 – 6.015.
3. Residuals that are left in place during closure of a lagoon or earthen structure or ash pond shall not exceed the agricultural loading rates as follows:
    a. Residuals shall meet the monitoring and land application limits for agricultural rates as referenced in Section H of these standard conditions.
    b. If a wastewater treatment lagoon has been in operation for 15 years or more without sludge removal, the sludge in the lagoon qualifies as a Class B biosolids with respect to pathogens due to anaerobic digestion, and testing for fecal coliform is not required. For other lagoons, testing for fecal coliform is required to show compliance with Class B biosolids limitations. In order to reach Class B biosolids requirements, fecal coliform must be less than 2,000,000 colony forming units or 2,000,000 most probable number. All fecal samples must be presented as geometric mean per gram.
    c. The allowable nitrogen loading that may be left in the lagoon shall be based on the plant available nitrogen (PAN) loading. For a grass cover crop, the allowable PAN is 300 pounds/acre.
        i. PAN can be determined as follows:

        (Nitrate + nitrite nitrogen) + (organic nitrogen x 0.2) + (ammonia nitrogen x volatilization factor[1]).

        [1] Volatilization factor is 0.7 for surface application and 1 for subsurface application.
4. When closing a domestic wastewater treatment lagoon with a design treatment capacity equal or less than 150 persons, the residuals are considered "septage" under the similar treatment works definition. See Section B of these standard conditions. Under the septage category, residuals may be left in place as follows:
    a. Testing for metals or fecal coliform is not required
    b. If the wastewater treatment lagoon has been in use for less than 15 years, mix lime with the sludge at a rate of 50 pounds of hydrated lime per 1000 gallons (134 cubic feet) of sludge.
    c. The amount of sludge that may be left in the lagoon shall be based on the plant available nitrogen (PAN) loading. 100 dry tons/acre of sludge may be left in the basin without testing for nitrogen. If 100 dry tons/acre or more will be left in the lagoon, test for nitrogen and determine the PAN using the calculation above. Allowable PAN loading is 300 pounds/acre.
5. Residuals left within the domestic lagoon shall be mixed with soil on at least a 1 to 1 ratio, the lagoon berm shall be demolished, and the site shall be graded and contain ≥70% vegetative density over 100% of the site so as to avoid ponding of storm water and provide adequate surface water drainage without creating erosion.
6. Lagoons and/or earthen structure and/or ash pond closure activities shall obtain a storm water permit for land disturbance activities that equal or exceed one acre in accordance with 10 CSR 20-6.200
7. When closing a mechanical wastewater and/or industrial process wastewater plant; all sludge must be cleaned out and disposed of in accordance with the Department approved closure plan before the permit for the facility can be terminated.
    a. Land must be stabilized which includes any grading, alternate use or fate upon approval by the Department, remediation, or other work that exposes sediment to stormwater per 10 CSR 20-6.200. The site shall be graded and contain ≥70% vegetative density over 100% of the site, so as to avoid ponding of storm water and provide adequate surface water drainage without creating erosion.
    b. Per 10 CSR 20-6.015(4)(B)6, Hazardous Waste shall not be land applied or disposed during industrial and mechanical plant closures unless in accordance with Missouri Hazardous Waste Management Law and Regulations under 10 CSR 25.
    c. After demolition of the mechanical plant / industrial plant, the site must only contain clean fill defined in RSMo 260.200 (5) as uncontaminated soil, rock, sand, gravel, concrete, asphaltic concrete, cinderblocks, brick, minimal amounts of wood and metal, and inert solids as approved by rule or policy of the Department for fill or other beneficial use. Other solid wastes must be removed.
8. If sludge from the domestic lagoon or mechanical treatment plant exceeds agricultural rates under Section G and/or H, a landfill permit or solid waste disposal permit must be obtained if the permittee chooses to seek authorization for on-site sludge disposal under the Missouri Solid Waste Management Law and regulations per 10 CSR 80, and the permittee must comply with the surface disposal requirements under 40 CFR 503, Subpart C.

SECTION I – MONITORING FREQUENCY

1. At a minimum, sludge or biosolids shall be tested for volume and percent total solids on a frequency that will accurately represent sludge quantities produced and disposed. Please see the table below.

TABLE 5

Design Sludge Production (dry tons per year)	Monitoring Frequency (See Notes 1, 2, and 3)			
	Metals, Pathogens and Vectors	Nitrogen TKN [1]	Nitrogen PAN [2]	Priority Pollutants and TCLP [3]
0 to 100	1 per year	1 per year	1 per month	1 per year
101 to 200	biannual	biannual	1 per month	1 per year
201 to 1,000	quarterly	quarterly	1 per month	1 per year
1,001 to 10,000	1 per month	1 per month	1 per week	--[4]
10,001 +	1 per week	1 per week	1 per day	--[4]

[1] Test total Kjeldahl nitrogen, if biosolids application is 2 dry tons per acre per year or less.
[2] Calculate plant available nitrogen (PAN) when either of the following occurs: 1) when biosolids are greater than 50,000 mg/kg TN; or 2) when biosolids are land applied at an application rate greater than two dry tons per acre per year.
[3] Priority pollutants (40 CFR 122.21, Appendix D, Tables II and III) and toxicity characteristic leaching procedure (40 CFR 261.24) is required only for permit holders that must have a pre-treatment program.
[4] One sample for each 1,000 dry tons of sludge.

Note 1: Total solids: A grab sample of sludge shall be tested one per day during land application periods for percent total solids. This data shall be used to calculate the dry tons of sludge applied per acre.
Note 2: Total Phosphorus: Total phosphorus and total potassium shall be tested at the same monitoring frequency as metals.
Note 3: Table 5 is not applicable for incineration and permit holders that landfill their sludge.

2. If you own a wastewater treatment lagoon or sludge lagoon that is cleaned out once a year or less, you may choose to sample only when the sludge is removed or the lagoon is closed. Test one composite sample for each 100 dry tons of sludge or biosolids removed from the lagoon during the year within the lagoon at closing. Composite sample must represent various areas at one-foot depth.
3. Additional testing may be required in the special conditions or other sections of the permit. Permittees receiving industrial wastewater may be required to conduct additional testing upon request from the Department.
4. At this time, the Department recommends monitoring requirements shall be performed in accordance with, "POTW Sludge Sampling and Analysis Guidance Document," United States Environmental Protection Agency, August 1989, and the subsequent revisions.

SECTION J – RECORD KEEPING AND REPORTING REQUIREMENTS

1. The permittee shall maintain records on file at the facility for at least five years for the items listed in these standard conditions and any additional items in the Special Conditions section of this permit. This shall include dates when the sludge facility is checked for proper operation, records of maintenance and repairs and other relevant information.
2. Reporting period
   a. By January 28th of each year, an annual report shall be submitted for the previous calendar year period for all mechanical wastewater treatment facilities, sludge lagoons, and sludge or biosolids disposal facilities.
   b. Permittees with wastewater treatment lagoons shall submit the above annual report only when sludge or biosolids are removed from the lagoon during the report period or when the lagoon is closed.
3. Report Forms. The annual report shall be submitted on report forms provided by the Department or equivalent forms approved by the Department.
4. Reports shall be submitted as follows:

   Major facilities (those serving 10,000 persons or 1 million gallons per day) shall report to both the Department and EPA. Other facilities need to report only to the Department. Reports shall be submitted to the addresses listed as follows:

   DNR regional office listed in your permit
   (see cover letter of permit)
   ATTN: Sludge Coordinator

   EPA Region VII
   Water Compliance Branch (WACM)
   Sludge Coordinator
   11201 Renner Blvd.
   Lenexa, KS 66219

5. Annual report contents. The annual report shall include the following:
    a. Sludge and biosolids testing performed. Include a copy or summary of all test results, even if not required by the permit.
    b. Sludge or biosolids quantity shall be reported as dry tons for quantity generated by the wastewater treatment facility, the quantity stored on site at the end of the year, and the quantity used or disposed.
    c. Gallons and % solids data used to calculate the dry ton amounts.
    d. Description of any unusual operating conditions.
    e. Final disposal method, dates, and location, and person responsible for hauling and disposal.
        i. This must include the name, address for the hauler and sludge facility. If hauled to a municipal wastewater treatment facility, sanitary landfill, or other approved treatment facility, give the name of that facility.
        ii. Include a description of the type of hauling equipment used and the capacity in tons, gallons, or cubic feet.
    f. Contract Hauler Activities:
    If contract hauler, provide a copy of a signed contract from the contractor. Permittee shall require the contractor to supply information required under this permit for which the contractor is responsible. The permittee shall submit a signed statement from the contractor that he has complied with the standards contained in this permit, unless the contract hauler has a separate sludge or biosolids use permit.
    g. Land Application Sites:
        i. Report the location of each application site, the annual and cumulative dry tons/acre for each site, and the landowners name and address. The location for each spreading site shall be given as a legal description for nearest ¼, ¼, Section, Township, Range, and county, or UTM coordinates. The facility shall report PAN when either of the following occurs: 1) When biosolids are greater than 50,000 mg/kg TN; or 2) when biosolids are land applied at an application rate greater than two dry tons per acre per year.
        ii. If the “Low Metals” criteria are exceeded, report the annual and cumulative pollutant loading rates in pounds per acre for each applicable pollutant, and report the percent of cumulative pollutant loading which has been reached at each site.
        iii. Report the method used for compliance with pathogen and vector attraction requirements.
        iv. Report soil test results for pH, CEC, and phosphorus. If none was tested during the year, report the last date when tested and results.

28856

RECEIVED
DEC 11 2017
Water Protection Program

MISSOURI DEPARTMENT OF NATURAL RESOURCES
WATER PROTECTION PROGRAM
FORM B: APPLICATION FOR OPERATING PERMIT FOR FACILITIES THAT RECEIVE PRIMARILY DOMESTIC WASTE AND HAVE A DESIGN FLOW LESS THAN OR EQUAL TO 100,000 GALLONS PER DAY

FOR AGENCY USE ONLY	
CHECK NUMBER	
DATE RECEIVED 12-11-17	FEE SUBMITTED 0

READ THE ACCOMPANYING INSTRUCTIONS BEFORE COMPLETING THIS FORM

1. THIS APPLICATION IS FOR:

☐ An operating permit for a new or unpermitted facility. Construction Permit # _____
(Include completed antidegradation review or request for antidegradation review, see instructions)

☐ A new site-specific operating permit formerly general permit #MOG _____

☑ A site-specific operating permit renewal: Permit #MO- 132322 Expiration Date 7/8/2018

☐ A site-specific operating permit modification: Permit #MO- _____ Reason: _____

☐ General permit (MOGD – Non POTWs discharging < 50,000 GPD *or* MOG823 – Land Application of Domestic Wastewater):
Permit #MO- _____ Expiration Date _____

1.1 Is the appropriate fee included with the application (see instructions for appropriate fee)? ☐ YES ☐ NO

2. FACILITY

NAME	TELEPHONE NUMBER WITH AREA CODE
THE COTTAGES AT TABLEROCK LAKE HOME OWNERS ASS.	(417) 858-5048

ADDRESS (PHYSICAL)	CITY	STATE	ZIP CODE
12 GREEN COTTAGE DR.	SHELL KNOB	MO	65747

2.1 Legal description: ¼, NW ¼, SW ¼, Sec. 16, T 22N, R 24W County STONE

2.2 UTM Coordinates Easting (X): 451391 Northing (Y): 4051740
For Universal Transverse Mercator (UTM), Zone 15 North referenced to North American Datum 1983 (NAD83)

2.3 Name of receiving stream: unNamed Tributary to table Rock Lake (U)

2.4 Number of outfalls: 1 Wastewater outfalls: 1 Stormwater outfalls: Instream monitoring sites:

3. OWNER

NAME	EMAIL ADDRESS	TELEPHONE NUMBER WITH AREA CODE
THE COTTAGES HOA		(417) 858-0489

ADDRESS	CITY	STATE	ZIP CODE
PO. BOX 842	SHELL KNOB	MO	65747

3.1 Request review of draft permit prior to public notice? ☐ YES ☐ NO

3.2 Are you a publicly owned treatment works? ☐ YES ☑ NO
If yes, is the Financial Questionnaire attached? ☐ YES ☐ NO

3.3 Are you a privately owned treatment works? ☑ YES ☐ NO

3.4 Are you a privately owned treatment facility regulated by the Public Service Commission? ☐ YES ☑ NO

4. CONTINUING AUTHORITY: Permanent organization that will serve as the continuing authority for the operation, maintenance and modernization of the facility.

NAME	EMAIL ADDRESS	TELEPHONE NUMBER WITH AREA CODE
The Cottages HOA		

ADDRESS	CITY	STATE	ZIP CODE
Po. Box 842	Shell Knob	MO	65747

If the continuing authority is different than the owner, include a copy of the contract agreement between the two parties and a description of the responsibilities of both parties within the agreement.

5. OPERATOR

NAME	TITLE	CERTIFICATE NUMBER
Dirk miller	operator	3480

EMAIL ADDRESS	TELEPHONE NUMBER WITH AREA CODE
millerdirk@outlook.com	(417) 271-1170

6. FACILITY CONTACT

NAME	TITLE
Ron Tresnak	HOA President

EMAIL ADDRESS	TELEPHONE NUMBER WITH AREA CODE
captainron7777777@yahoo.com	417-858-0489

ADDRESS	CITY	STATE	ZIP CODE
12 Green Cottage Dr.	Shell Knob	MO	65747

MO 780-1512 (09-16)

7.1 **Process Flow Diagram Examples**

RECEIVED
DEC 11 2017
Water Protection Program

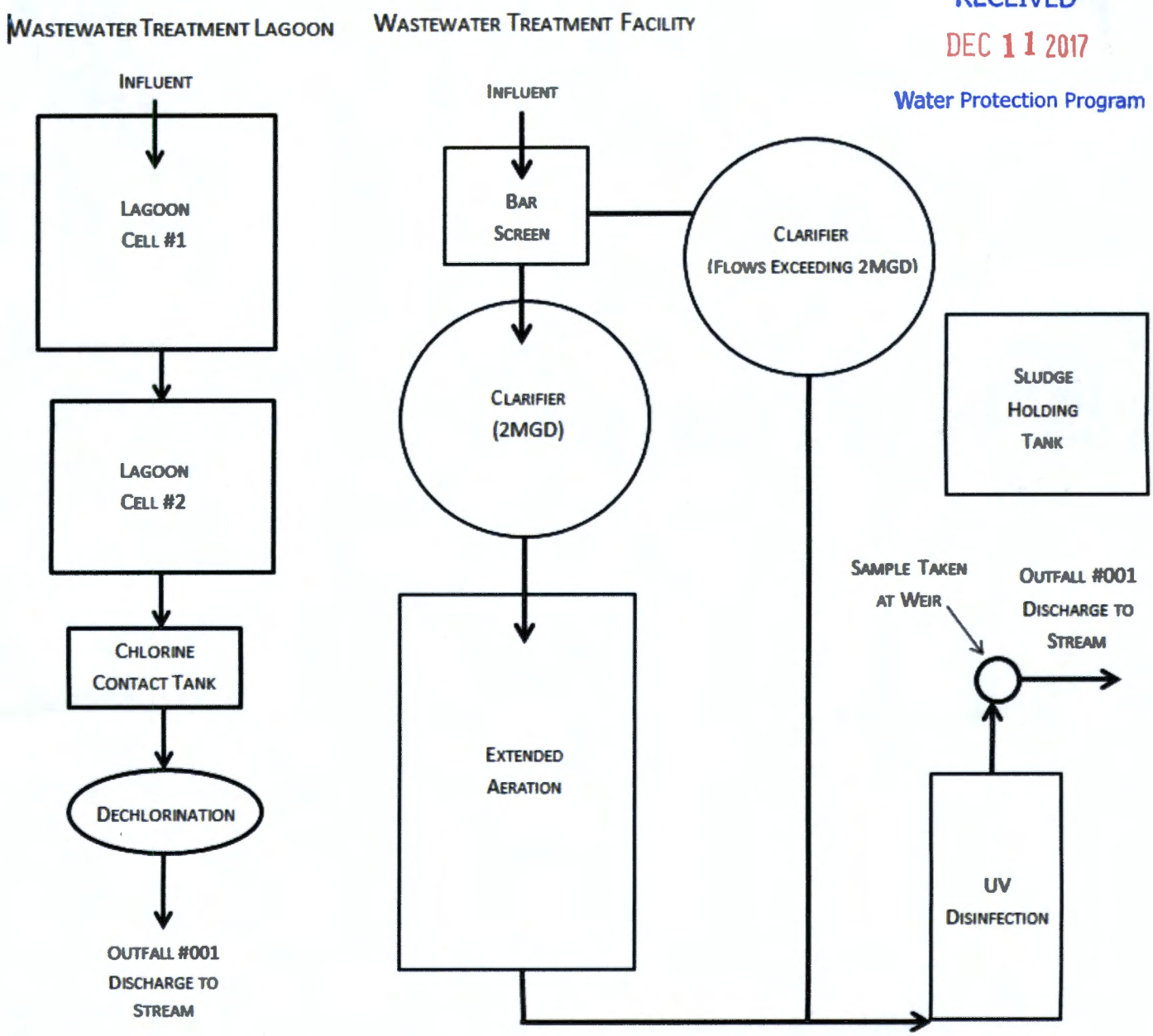

7.2 A topographic map is available on the Web at www.dnr.mo.gov/internetmapviewer/ or from the Department of Natural Resources' Geological Survey Division in Rolla at 573-368-2125.

8.1 For Standard Industrial Codes visit www.osha.gov/pls/imis/sicsearch.html or contact the Department of Natural Resources' Water Protection Program. For example, a family style restaurant has a Facility SIC code of 5812.

8.2-8.7 Self-explanatory.

8.8 If wastewater is land applied submit for Form I: www.dnr.mo.gov/forms/780-1686-f.pdf.

8.9-8.10 Self-explanatory

© 2017 Google

7. DESCRIPTION OF FACILITY

7.1 Process Flow Diagram or Schematic: Provide a diagram showing the processes of the treatment plant. Show all of the treatment units, including disinfection (e.g. – chlorination and dechlorination), influents, and outfalls. Specify where samples are taken. Indicate any treatment process changes in the routing of wastewater during dry weather and peak wet weather. Include a brief narrative description of the diagram.
Attach sheets as necessary.

RECEIVED
DEC 11 2017
Water Protection Program

✓ **7.2** Attach an aerial photograph or USGS topographic map showing the location of the facility and outfall.

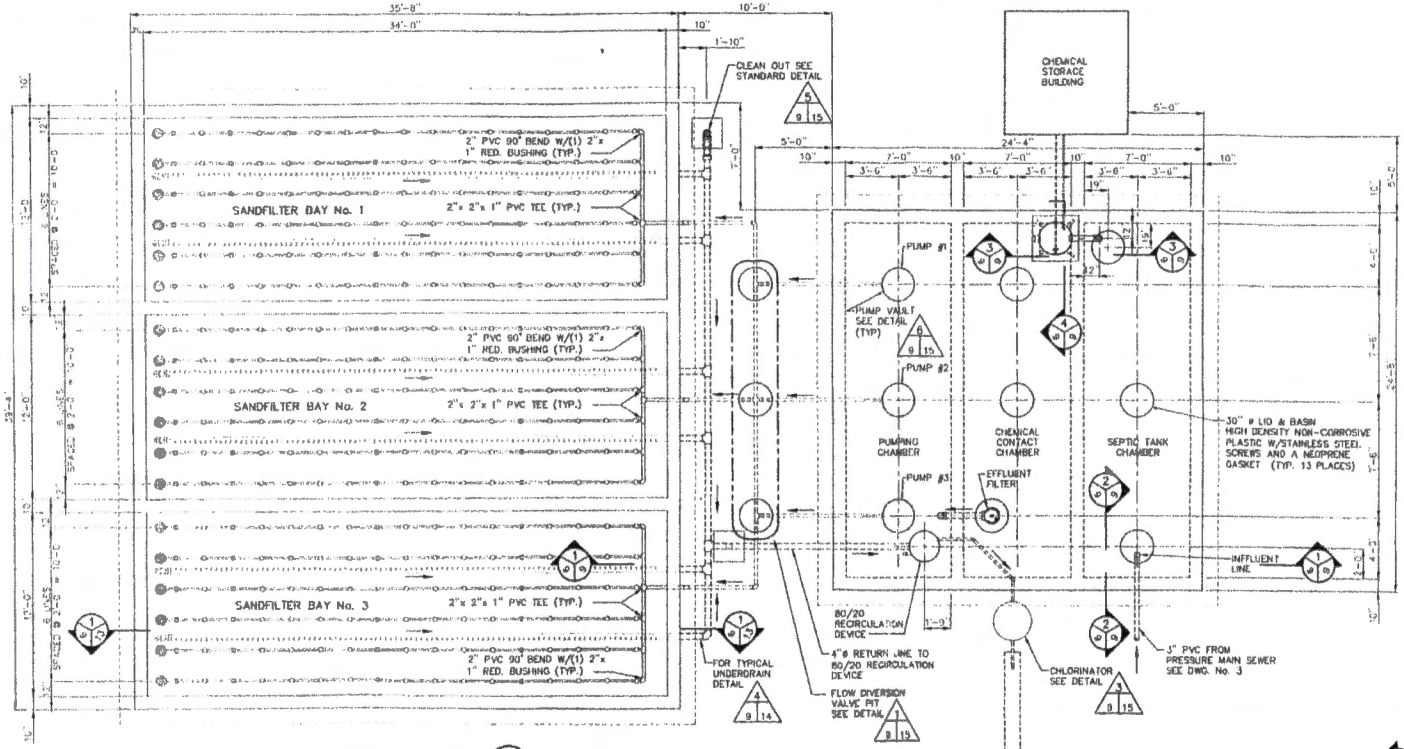

RECIRCULATION TANK
1/4" = 1'-0"

GENERAL NOTES:

ALL BURIED FITTINGS (BENDS, TEES, PLUGS, CAPS, ETC.) SHALL HAVE PLAIN CONCRETE THRUST BLOCKING PER DETAIL ON DWG. No. 18.

FOR PIPE TRENCH & BEDDING DETAILS, SEE STANDARD DETAILS ON DWG. No. 18.

CONTRACTOR SHALL BE RESPONSIBLE FOR SUPPLYING ALL PIPING, VALVES AND FITTINGS FOR A COMPLETE AND FUNCTIONING SYSTEM.

PIPE SIZES & TYPES AS NOTED AND SHOWN ON DRAWINGS. PIPE LENGTHS ARE VARIABLE, AS REQUIRED FOR INSTALLATION PER DRAWINGS. FOR COMPLETE DESCRIPTION OF PIPE, CLASS & MATERIAL, SEE SPECIFICATIONS.

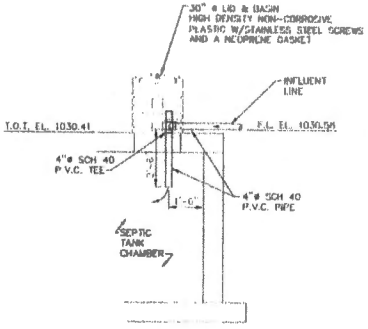

INLET PIPE SECTION
3/8" = 1'-0"

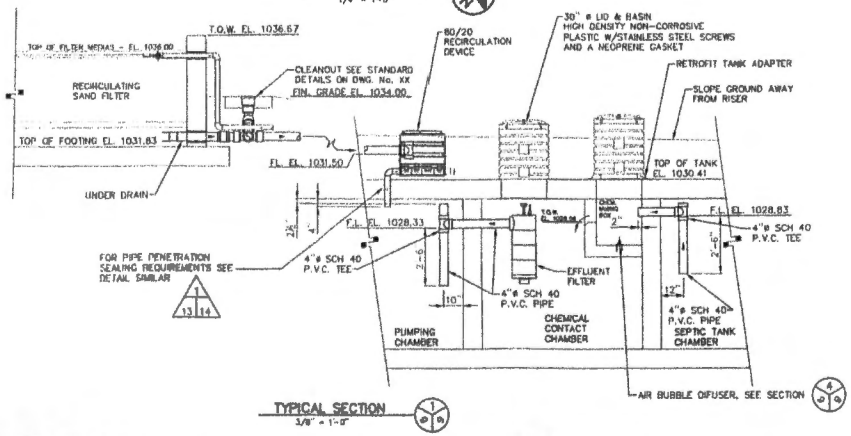

TYPICAL SECTION
3/8" = 1'-0"

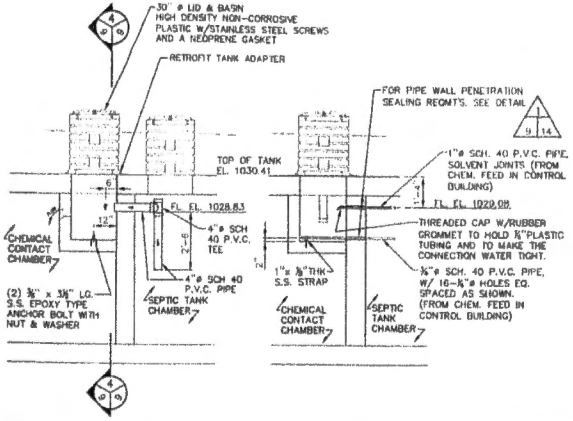

CHEMICAL MIXING BOX SECTION
3/8" = 1'-0"

SECTION
1/4" = 1'-0"

ALLGEIER, MARTIN & ASSOCIATES, INC.
CONSULTING ENGINEERS & SURVEYORS
JOPLIN, MISSOURI

THIS DRAWING IS A DOCUMENT OF SERVICE AND IS THE PROPERTY OF ALLGEIER, MARTIN & ASSOCIATES, INC. THIS DOCUMENT SHALL NOT BE USED ON THIS OR OTHER PROJECTS WITHOUT THE WRITTEN CONSENT OF ALLGEIER, MARTIN & ASSOCIATES, INC.

DATE	REVISION

DWN BY	JLG
CKD BY	JHS
APPD BY	JHS
DATE	OCT., 2006

SAND FILTER - GENERAL PLAN & SECTIONS
THE COTTAGES
TAP CORPORATION

DWG NO. 9

STATE OF MISSOURI JACK SCHAFFER NUMBER E-28531 REGISTERED PROFESSIONAL ENGINEER

8. ADDITIONAL FACILITY INFORMATION

8.1 Facility SIC code: 8641 Discharge SIC code: 001

8.2 Number of people presently connected or population equivalent (P.E.) 58 Design P.E. 58

8.3 Connections to the facility:

Number of units presently connected:

Homes 7 Trailers _____ Apartments _____ Other (including industrial) _____

Number of commercial establishments: _____

8.4 Design flow: 0.0058 MGD | Actual flow: 0.0013 or 1,500 GPD

8.5 Will discharge be continuous through the year? ☒ Yes ☐ No

Discharge will occur during the following months:

How many days of the week will discharge occur?

8.6 Is industrial wastewater discharged to the facility? ☐ Yes ☒ No

If yes, attach a list of the industries that discharge to your facility

8.7 Does the facility accept or process leachate from landfills? ☐ Yes ☒ No

8.8 Is wastewater land applied? ☐ Yes ☒ No

If yes, is Form I attached? ☐ Yes ☐ No

8.9 Does the facility discharge to a losing stream or sinkhole? ☐ Yes ☒ No

8.10 Has a wasteload allocation study been completed for this facility? ☒ Yes ☐ No

9. LABORATORY CONTROL INFORMATION

LABORATORY WORK CONDUCTED BY PLANT PERSONNEL

Lab work conducted outside of plant. ☐ Yes ☒ No

Push-button or visual methods for simple test such as pH, settlable solids. ☒ Yes ☐ No

Additional procedures such as dissolved oxygen, chemical oxygen demand, biological oxygen demand, titrations, solids, volatile content. ☐ Yes ☒ No

More advanced determinations such as BOD seeding procedures, fecal coliform, nutrients, total oils, phenols, etc. ☐ Yes ☒ No

Highly sophisticated instrumentation, such as atomic absorption and gas chromatograph. ☐ Yes ☒ No

10. COLLECTION SYSTEM

10.1 Length of pipe in the sewer collection system? 2700 Feet, or _____ Miles (either unit is appropriate)

10.2 Does significant infiltration occur in the collection system? ☐ Yes ☒ No

If yes, briefly explain any steps underway or planned to minimize inflow and infiltration:

11. BYPASSING

Does any bypassing occur in the collection system or at the treatment facility? ☐ Yes ☒ No

If yes, explain:

12. SLUDGE HANDLING, USE AND DISPOSAL

12.1 Is the sludge a hazardous waste as defined by 10 CSR 25? ☐ Yes ☑ No

12.2 Sludge production, including sludge received from others: 0.57 Design dry tons/year ? Actual dry tons/year

12.3 Capacity of sludge holding structures:
Sludge storage provided: _____ cubic feet; _____ days of storage; _____ average percent solids of sludge;
☑ No sludge storage is provided. ☐ Sludge is stored in lagoon.

12.4 Type of Storage:
☐ Holding tank ☐ Building
☐ Basin ☐ Lagoon
☐ Concrete Pad ☐ Other (Describe) _____

12.5 Sludge Treatment:
☐ Anaerobic Digester ☐ Lagoon ☐ Composting
☐ Storage Tank ☐ Aerobic Digester ☐ Other (Attach description)
☐ Lime Stabilization ☐ Air or Heat Drying

12.6 Sludge Use or Disposal:
☐ Land Application ☐ Surface Disposal (Sludge Disposal Lagoon, Sludge held for more than two years)
☑ Contract Hauler ☐ Hauled to Another treatment facility
☐ Incineration ☐ Sludge Retained in Wastewater treatment lagoon
☐ Solid waste landfill

12.7 Person responsible for hauling sludge to disposal facility:
☐ By applicant ☑ By others (complete below)

NAME	EMAIL ADDRESS		
Steve Septic Service	—		
ADDRESS	CITY	STATE	ZIP CODE
2245 Hwy. 221 N.	Berryville	AR	72616
CONTACT PERSON	TELEPHONE NUMBER WITH AREA CODE	PERMIT NO.	
Steve Tally	870-423-4669	MO-	

12.8 Sludge use or disposal facility
☐ By applicant ☐ By others (Complete below.)

NAME	EMAIL ADDRESS		
ADDRESS	CITY	STATE	ZIP CODE
CONTACT PERSON	TELEPHONE NUMBER WITH AREA CODE	PERMIT NO.	
		MO-	

12.9 Does the sludge or biosolids disposal comply with federal sludge regulations under 40 CFR 503?
☐ Yes ☐ No (Explain)

13. ELECTRONIC DISCHARGE MONITORING REPORT (eDMR) SUBMISSION SYSTEM

Per 40 CFR Part 127 National Pollutant Discharge Elimination System (NPDES) Electronic Reporting Rule, reporting of effluent limits and monitoring shall be submitted by the permittee via an electronic system to ensure timely, complete, accurate, and nationally consistent set of data. **One of the following must be checked in order for this application to be considered complete.** Please visit http://dnr.mo.gov/env/wpp/edmr.htm to access the Facility Participation Package.

☐ - You have completed and submitted with this permit application the required documentation to participate in the eDMR system.

☑ - You have previously submitted the required documentation to participate in the eDMR system and/or you are currently using the eDMR system.

☐ - You have submitted a written request for a waiver from electronic reporting. See instructions for further information regarding waivers.

14. CERTIFICATION

I certify that I am familiar with the information contained in the application, that to the best of my knowledge and belief such information is true, complete and accurate, and if granted this permit, I agree to abide by the Missouri Clean Water Law and all rules, regulations, orders and decisions, subject to any legitimate appeal available to applicant under the Missouri Clean Water Law.

NAME (TYPE OR PRINT)	OFFICIAL TITLE	TELEPHONE NUMBER WITH AREA CODE
Ronald J. Tresnak	HOA President	417-858-0489
SIGNATURE		DATE SIGNED
Ronald J. Tresnak		12-6-2017