STATE OF MISSOURI

DEPARTMENT OF NATURAL RESOURCES

MISSOURI CLEAN WATER COMMISSION

MISSOURI STATE OPERATING PERMIT

In compliance with the Missouri Clean Water Law, (Chapter 644 R.S. Mo. as amended, hereinafter, the Law),

Permit No.	MO-0004588
Owner:	Missouri City Acquisition, LLC
Address:	1530 S. Second St, St. Louis, MO 63104
Continuing Authority:	Same as above
Address:	Same as above
Facility Name:	Missouri City Power Station
Address:	22225 210 Highway, Missouri City, MO 64072
Legal Description:	See Page Two
Latitude/Longitude:	See Page Two
Receiving Stream:	See Page Two
First Classified Stream and ID:	See Page Two
USGS Basin & Sub-watershed No.:	(10300101-0307)

is authorized to discharge from the facility described herein, in accordance with the effluent limitations and monitoring requirements as set forth herein:

FACILITY DESCRIPTION

See Page Two. SIC #4911.
Missouri City Power Station ceased generating electricity on January 31, 2016. The generating capacity of the plant was 42 megawatts. The plant originally was constructed in 1952. This permit covers the groundwater monitoring wells. This permit does not require a certified operator.

This permit authorizes only groundwater discharges under the Missouri Clean Water Law; it does not apply to other regulated areas. This permit may be appealed in accordance with Sections 640.013, 621.250, and 644.051.6 of the Law.

March 1, 2019
Effective Date

Edward B. Galbraith, Director, Division of Environmental Quality

February 28, 2024
Expiration Date

Chris Wieberg, Director, Water Protection Program

FACILITY DESCRIPTION (CONTINUED)

Outfalls #001,#002, and #003 – Power Plant – SIC #4911
Permitted feature removed with the 2017 permit renewal as the power station is closed and non-contact cooling wastewater is not being discharged.

Outfalls #006 and #007 – Power Plant – SIC #4911
Permitted feature removed with the 2017 permit renewal as the power station is closed and industrial stormwater is not being discharged.

MW-1: Monitoring Well (M01 in MoCWIS)
Legal Description: SE ¼, NE ¼, Sec. 18, T51N, R30W, Clay County
UTM Coordinates: X = 386948, Y = 4343014

PZ-1: Monitoring Well (P01 in MoCWIS)
Legal Description: SE ¼, NE ¼, Sec. 18, T51N, R30W, Clay County
UTM Coordinates: X = 387032, Y = 4343185

PZ-2: Monitoring Well (P02 in MoCWIS)
Legal Description: SE ¼, NE ¼, Sec. 18, T51N, R30W, Clay County
UTM Coordinates: X = 387002, Y = 4343265

PZ-3: Monitoring Well (P03 in MoCWIS)
Legal Description: SE ¼, NE ¼, Sec. 18, T51N, R30W, Clay County
UTM Coordinates: X = 387015, Y = 4343122

PZ-4: Monitoring Well (P04 in MoCWIS)
Legal Description: SE ¼, NE ¼, Sec. 18, T51N, R30W, Clay County
UTM Coordinates: X = 387096, Y = 4343379

PZ-6: Monitoring Well (P06 in MoCWIS)
Legal Description: SE ¼, NE ¼, Sec. 18, T51N, R30W, Clay County
UTM Coordinates: X = 386872, Y = 4343319

PZ-7: Monitoring Well (P07 in MoCWIS)
Legal Description: SE ¼, NE ¼, Sec. 18, T51N, R30W, Clay County
UTM Coordinates: X = 386779, Y = 4343465

PZ-9: Monitoring Well (P09 in MoCWIS)
Legal Description: SE ¼, NE ¼, Sec. 18, T51N, R30W, Clay County
UTM Coordinates: X = 386550, Y = 4343242

PZ-10: Monitoring Well (P10 in MoCWIS)
Legal Description: SE ¼, NE ¼, Sec. 18, T51N, R30W, Clay County
UTM Coordinates: X = 386683, Y = 4343167

P-11: Monitoring Well (P11 in MoCWIS)
Legal Description: SE ¼, NE ¼, Sec. 18, T51N, R30W, Clay County
UTM Coordinates: X = 386826, Y = 4342993

P-12: Monitoring Well (P12 in MoCWIS)
Legal Description: SE ¼, NE ¼, Sec. 18, T51N, R30W, Clay County
UTM Coordinates: X = 386948, Y = 4343014

A. EFFLUENT LIMITATIONS AND MONITORING REQUIREMENTS

GROUNDWATER MONITORING WELLS MW-1, P-1 THROUGH P-4, P-6 THROUGH P-7, P-9 THROUGH P-12	**TABLE A-1: GROUNDWATER MONITORING AND REPORTING REQUIREMENTS**				
	The permittee is required to conduct groundwater monitoring for all wells specified in this permit. Such waters shall be sampled and monitored by the permittee as specified below:				
SAMPLING PARAMETERS	UNITS	FINAL EFFLUENT LIMITS		MONITORING REQUIREMENTS	
		DAILY MAXIMUM	MONTHLY AVERAGE	MEASUREMENT FREQUENCY	SAMPLE TYPE
FIELD PARAMETERS					
Depth to Water (Note 1)	foot	*	*	once/quarter ◊	field measurement
Purge Volume (Note 2)	Mgal/d	*	*	once/quarter ◊	field measurement
pH (Note 3)	SU	*	*	once/quarter ◊	field measurement
Conductivity	µMohs/cm	*	*	once/quarter ◊	field measurement
Oxidation/Reduction Potential (ORP)	/mv	*	*	once/quarter ◊	field measurement
Turbidity (Note 4)	NTU	*	*	once/quarter ◊	field measurement
ORGANICS					
Sulfate as SO_4	mg/L	*	*	once/quarter ◊	grab
OTHER					
Hardness as $CaCO_3$	mg/L	*	*	once/quarter ◊	grab
Total Dissolved Solids (TDS)	mg/L	*	*	once/quarter ◊	grab
METALS, TOTAL RECOVERABLE					
Arsenic, Total Recoverable	µg/L	*	*	once/quarter ◊	grab
Aluminum, Total Recoverable	µg/L	*	*	once/quarter ◊	grab
Antimony, Total Recoverable	µg/L	*	*	once/quarter ◊	grab
Barium, Total Recoverable	µg/L	*	*	once/quarter ◊	grab
Boron, Total Recoverable	µg/L	*	*	once/quarter ◊	grab
Cadmium, Total Recoverable	µg/L	*	*	once/quarter ◊	grab
Chromium, Total	µg/L	*	*	once/quarter ◊	grab
Cobalt, Total Recoverable	µg/L	*	*	once/quarter ◊	grab
Iron, Total Recoverable	µg/L	*	*	once/quarter ◊	grab
Lead, Total Recoverable	µg/L	*	*	once/quarter ◊	grab
Lithium, Total Recoverable	µg/L	*	*	once/quarter ◊	grab
Mercury, Total Recoverable	µg/L	*	*	once/quarter ◊	grab
Molybdenum, Total Recoverable	µg/L	*	*	once/quarter ◊	grab
Selenium, Total Recoverable	µg/L	*	*	once/quarter ◊	grab
Zinc, Total Recoverable	µg/L	*	*	once/quarter ◊	grab
MONITORING REPORTS SHALL BE SUBMITTED QUARTERLY; THE FIRST REPORT IS DUE JULY 28, 2019.					
RADIONUCLIDES					
Radium 226 (^{226}Ra)	pCi/L	*	*	once/year	grab
Radium 228 (^{228}Ra)	pCi/L	*	*	once/year	grab
MONITORING REPORTS SHALL BE SUBMITTED ANNUALLY; THE FIRST REPORT IS DUE JANUARY 28, 2020.					

* Monitoring requirement only.

Note 1 The facility will measure static depth to water prior to any other sampling activities. Depth will be measured to the nearest 0.01 foot.

Note 2 The facility will report the final volume of purged water. The facility may report "0" for no-purge sampling methods.

Note 3 The facility will report the final pH value after well stabilization, just prior to collecting groundwater for samples. The facility will report the minimum and maximum values. pH is not to be averaged.

Note 4 The facility will report the final turbidity value after well stabilization, just prior to collecting groundwater for samples.

◊ Quarterly sampling

MINIMUM QUARTERLY SAMPLING REQUIREMENTS			
QUARTER	MONTHS	EFFLUENT PARAMETERS	REPORT IS DUE
First	January, February, March	Sample at least once during any month of the quarter	April 28th
Second	April, May, June	Sample at least once during any month of the quarter	July 28th
Third	July, August, September	Sample at least once during any month of the quarter	October 28th
Fourth	October, November, December	Sample at least once during any month of the quarter	January 28th

B. STANDARD CONDITIONS

Section I – Sampling, Monitoring, and Recording

1. **Sampling Requirements.**
   a. Samples and measurements taken for the purpose of monitoring shall be representative of the monitored activity.
   b. All samples shall be taken at the Missouri Department of Natural Resources (Department) approved sampling location(s), following industry accepted groundwater monitoring guidance.
   c. Calibration of monitoring equipment shall occur prior to use for sampling and at intervals as necessary.

2. **Monitoring Requirements**.
   a. Records of monitoring information shall include:
      i. The date, and time of sampling or measurement;
      ii. The well identifier;
      iii. The individual(s) who performed the sampling or measurements;
      iv. The date(s) analyses were performed;
      v. The individual(s) who performed the analyses;
      vi. The analytical techniques or methods used; and
      vii. The results of such analyses.
   b. If the permittee monitors any pollutant more frequently than required by the permit at the location specified in the permit, the results of such monitoring shall be included in the calculation and reported to the Department with the discharge monitoring report data (DMR) submitted to the Department pursuant to Section II, paragraph 7.

3. **Sample and Monitoring Calculations.** Calculations for all sample and monitoring results which require averaging of measurements shall utilize an arithmetic mean.

4. **Test Procedures**. The analytical and sampling methods used shall conform to the reference methods listed in 10 CSR 20-7.015 unless alternates are approved by the Department (See Special Conditions). The facility shall use sufficiently sensitive analytical methods for detecting, identifying, and measuring the concentrations of pollutants. The facility shall ensure that the selected methods are able to quantify the presence of pollutants in a given discharge at concentrations that are low enough to determine compliance with Water Quality Standards in 10 CSR 20-7.031 or effluent limitations unless provisions in the permit allow for other alternatives. A method is "sufficiently sensitive" when; 1) the method minimum level is at or below the level of the applicable water quality criterion for the pollutant or, 2) the method minimum level is above the applicable water quality criterion, but the amount of pollutant in a facility's discharge is high enough that the method detects and quantifies the level of pollutant in the discharge, or 3) the method has the lowest minimum level of the analytical methods approved under 10 CSR 20-7.015. These methods are also required for parameters that are listed as monitoring only, as the data collected may be used to determine if limitations need to be established. A permittee is responsible for working with their contractors to ensure that the analysis performed is sufficiently sensitive.

5. **Record Retention.** The permittee shall retain records of all monitoring information, including all calibration and maintenance records and all original strip chart recordings for continuous monitoring instrumentation, copies of all reports required by the permit, and records of all data used to complete the application for the permit, for a period of at least five years from the date of the sample, measurement, report or application. This period may be extended by request of the Department at any time.

6. **Illegal Activities.** The Missouri Clean Water Law provides that any person or who falsifies, tampers with, or knowingly renders inaccurate any monitoring device or method required to be maintained pursuant to sections 644.006 to 644.141 shall, upon conviction, be punished by a fine of not more than $10,000, or by imprisonment for not more than six (6) months, or by both. Second and successive convictions for violation under this paragraph by any person shall be punished by a fine of not more than $50,000 per day of violation, or by imprisonment for not more than two (2) years, or both.

B. STANDARD CONDITIONS (CONTINUED)

Section II – Reporting Requirements

1. **Planned Changes.** The permittee shall give notice to the Department as soon as possible of any planned physical alterations or additions to the permitted facility.

2. **Anticipated Noncompliance**. The permittee shall give advance notice to the Department of any planned changes in the permitted facility or activity which may result in noncompliance with permit requirements. The notice shall be submitted to the Department 60 days prior to such changes or activity.

3. **Compliance Schedules.** Reports of compliance or noncompliance with, or any progress reports on, interim and final requirements contained in any compliance schedule of the permit shall be submitted no later than 14 days following each schedule date. The report shall provide an explanation for the instance of noncompliance and a proposed schedule or anticipated date, for achieving compliance with the compliance schedule requirement.

4. **Noncompliance.** The permittee shall report all instances of noncompliance not reported under paragraphs 3, and 5 of this section, at the time reports are submitted.

5. **Other Information**. Where the permittee becomes aware that it failed to submit any relevant facts in a permit application, or submitted incorrect information in a permit application or in any report to the Department, it shall promptly submit such facts or information.

Section III – Administrative Requirements

1. **Duty to Comply.** The permittee must comply with all conditions of this permit. Any permit noncompliance constitutes a violation of the Missouri Clean Water Law and is grounds for enforcement action; for permit termination, revocation and reissuance, or modification; or denial of a permit renewal application.

   It is unlawful for any person to cause or permit any discharge of water contaminants from any water contaminant or point source located in Missouri in violation of sections 644.006 to 644.141 of the Missouri Clean Water Law, or any standard, rule or regulation promulgated by the commission. In the event the commission or the director determines that any provision of sections 644.006 to 644.141 of the Missouri Clean Water Law or standard, rules, limitations or regulations promulgated pursuant thereto, or permits issued by, or any final abatement order, other order, or determination made by the commission or the director, or any filing requirement pursuant to sections 644.006 to 644.141 of the Missouri Clean Water Law or any other provision which this state is required to enforce pursuant to any federal water pollution control act, is being, was, or is in imminent danger of being violated, the commission or director may cause to have instituted a civil action in any court of competent jurisdiction for the injunctive relief to prevent any such violation or further violation or for the assessment of a penalty not to exceed $10,000 per day for each day, or part thereof, the violation occurred and continues to occur, or both, as the court deems proper. Any person who willfully or negligently commits any violation in this paragraph shall, upon conviction, be punished by a fine of not less than $2,500 nor more than $25,000 per day of violation, or by imprisonment for not more than one year, or both. Second and successive convictions for violation of the same provision of this paragraph by any person shall be punished by a fine of not more than $50,000 per day of violation, or by imprisonment for not more than two (2) years, or both.

2. **Duty to Reapply.**
   a. If the permittee wishes to continue an activity regulated by this permit after the expiration date of this permit, the permittee must apply for and obtain a new permit.
   b. A permittee with a currently effective site-specific permit shall submit an application for renewal at least 180 days before the expiration date of the existing permit, unless permission for a later date has been granted by the Department. (The Department shall not grant permission for applications to be submitted later than the expiration date of the existing permit.)
   c. A permittees with currently effective general permit shall submit an application for renewal at least 30 days before the existing permit expires, unless the permittee has been notified by the Department that an earlier application must be made. The Department may grant permission for a later submission date. (The Department shall not grant permission for applications to be submitted later than the expiration date of the existing permit.)

3. **Need to Halt or Reduce Activity Not a Defense.** It shall not be a defense for a permittee in an enforcement action that it would have been necessary to halt or reduce the permitted activity in order to maintain compliance with the conditions of this permit.

4. **Duty to Mitigate.** The permittee shall take all reasonable steps to minimize or prevent any discharge or sludge use or disposal in violation of this permit which has a reasonable likelihood of adversely affecting human health or the environment.

B. STANDARD CONDITIONS (CONTINUED)

5. **Proper Operation and Maintenance**. The permittee shall at all times properly operate and maintain all facilities and systems of treatment and control (and related appurtenances) which are installed or used by the permittee to achieve compliance with the conditions of this permit. Proper operation and maintenance also includes adequate laboratory controls and appropriate quality assurance procedures. This provision requires the operation of back-up or auxiliary facilities or similar systems which are installed by a permittee only when the operation is necessary to achieve compliance with the conditions of the permit.

6. **Permit Actions.**
   a. Subject to compliance with statutory requirements of the Law and Regulations and applicable Court Order, this permit may be modified, suspended, or revoked in whole or in part during its term for cause including, but not limited to, the following:
      i. Violations of any terms or conditions of this permit or the law;
      ii. Having obtained this permit by misrepresentation or failure to disclose fully any relevant facts;
      iii. A change in any circumstances or conditions that requires either a temporary or permanent reduction or elimination of the authorized discharge; or
      iv. Any reason set forth in the Law or Regulations.
   b. The filing of a request by the permittee for a permit modification, revocation and reissuance, or termination, or a notification of planned changes or anticipated noncompliance does not stay any permit condition.

7. **Permit Transfer.**
   a. Subject to 10 CSR 20-6.010, an operating permit may be transferred upon submission to the Department of an application to transfer signed by the existing owner and the new owner, unless prohibited by the terms of the permit. Until such time the permit is officially transferred, the original permittee remains responsible for complying with the terms and conditions of the existing permit.
   b. The Department may require modification or revocation and reissuance of the permit to change the name of the permittee and incorporate such other requirements as may be necessary under the Missouri Clean Water Law or the Federal Clean Water Act.
   c. The Department, within 30 days of receipt of the application, shall notify the new permittee of its intent to revoke or reissue or transfer the permit.

8. **Property Rights.** This permit does not convey any property rights of any sort, or any exclusive privilege.

9. **Duty to Provide Information.** The permittee shall furnish to the Department, within a reasonable time, any information which the Department may request to determine whether cause exists for modifying, revoking and reissuing, or terminating this permit or to determine compliance with this permit. The permittee shall also furnish to the Department upon request, copies of records required to be kept by this permit.

10. **Inspection and Entry.** The permittee shall allow the Department, or an authorized representative (including an authorized contractor acting as a representative of the Department), upon presentation of credentials and other documents as may be required by law, to:
    a. Enter upon the permittee's premises where a regulated facility or activity is located or conducted, or where records must be kept under the conditions of the permit;
    b. Have access to and copy, at reasonable times, any records that must be kept under the conditions of this permit;
    c. Inspect at reasonable times any facilities, equipment (including monitoring and control equipment), practices, or operations regulated or required under this permit; and
    d. Sample or monitor at reasonable times, for the purposes of assuring permit compliance or as otherwise authorized by the Missouri Clean Water Law, any substances or parameters at any location.

11. **Signatory Requirement.**
    a. All permit applications, reports required by the permit, or information requested by the Department shall be signed and certified. (See 10 CSR 20-6.010)
    b. The Missouri Clean Water Law provides that any person who knowingly makes any false statement, representation or certification in any application, record, report, plan, or other document filed or required to be maintained pursuant to sections 644.006 to 644.141 shall, upon conviction, be punished by a fine of not more than ten thousand dollars, or by imprisonment for not more than six months, or by both.

12. **Severability.** The provisions of the permit are severable, and if any provision of the permit, or the application of any provision of the permit to any circumstance, is held invalid, the application of such provision to other circumstances, and the remainder of the permit, shall not be affected thereby.

C. SPECIAL CONDITIONS

1. The full implementation of this operating permit, which includes implementation of any applicable schedules of compliance, shall constitute compliance with all applicable federal and state statutes and regulations in accordance with §644.051.16, RSMo, and the CWA section 402(k); however, this permit may be reopened and modified, or alternatively revoked and reissued to comply with any applicable effluent standard or limitation issued or approved under Sections 301(b)(2)(C) and (D), §304(b)(2), and §307(a) (2) of the Clean Water Act, if the effluent standard or limitation so issued or approved contains different conditions or is otherwise more stringent than any effluent limitation in the permit; or controls any pollutant not limited in the permit.

2. Report as no-discharge when a discharge does not occur during the report period.

3. It is a violation of the Missouri Clean Water Law to fail to pay fees associated with this permit (644.055 RSMo).

4. Electronic Discharge Monitoring Report (eDMR) Submission System.
   (a) Discharge Monitoring Reporting Requirements. The permittee must electronically submit compliance monitoring data via the eDMR system. In regards to Standard Conditions Part I, Section B, #7, the eDMR system is currently the only Department approved reporting method for this permit.
   (b) Programmatic Reporting Requirements. The following reports (if required by this permit) must be electronically submitted as an attachment to the eDMR system until such a time when the current or a new system is available to allow direct input of the data:
      (1) Any additional report required by the permit excluding bypass reporting.
      After such a system has been made available by the department, required data shall be directly input into the system by the next report due date.
   (c) Other actions. The following shall be submitted electronically after such a system has been made available by the department:
      (1) General Permit Applications/Notices of Intent to discharge (NOIs);
      (2) Notices of Termination (NOTs);
   (d) Electronic Submissions. To access the eDMR system, use the following link in your web browser: https://edmr.dnr.mo.gov/edmr/E2/Shared/Pages/Main/Login.aspx.
   (e) Waivers from Electronic Reporting. The permittee must electronically submit compliance monitoring data and reports unless a waiver is granted by the department in compliance with 40 CFR Part 127. The permittee may obtain an electronic reporting waiver by first submitting an eDMR Waiver Request Form: http://dnr.mo.gov/forms/780-2692-f.pdf. The department will either approve or deny this electronic reporting waiver request within 120 calendar days. Only permittees with an approved waiver request may submit monitoring data and reports on paper to the Department for the period that the approved electronic reporting waiver is effective.

5. Reporting of Non-Detects
   (a) An analysis conducted by the permittee or their contracted laboratory shall be conducted in such a way that the precision and accuracy of the analyzed result can be enumerated.
   (b) The permittee shall not report a sample result as “Non-Detect” without also reporting the detection limit of the test. Reporting as “Non-Detect” without also including the detection limit will be considered failure to report, which is a violation of this permit.
   (c) The permittee shall report the “Non-Detect” result using the less than sign and the minimum detection limit (e.g. <10).
   (d) Where the permit contains a Minimum Level (ML) and the permittee is granted authority in the permit to report zero in lieu of the < ML for a specified parameter (conventional, priority pollutants, metals, etc.), then zero (0) is to be reported for that parameter.
   (e) See Standard Conditions Part I, Section A, #4 regarding proper detection limits used for sample analysis.
   (f) When calculating monthly averages, one-half of the minimum detection limit (MDL) should be used instead of a zero. Where all data are below the MDL, the “<MDL” shall be reported as indicated in item (C).

6. This permit grants the facility ability to use, without penalty, any analytical method commonly used for groundwater to obtain analytical values. All non-40 CFR 136 methods used must have the ability to meet or surpass the reporting limit of the established 40 CFR 136 method which is sensitive enough to determine both the presence of the analyte in the groundwater and have the quantitation limit below water quality standards; or be the most sensitive method for the analyte.

C. SPECIAL CONDITIONS

7. Groundwater Monitoring Program:
   a) The department has the right to require additional wells be installed at any time.
   b) New, moved, or closed groundwater wells must be codified in permit through permit modification. Closing and reinstalling within 20 feet of the same location does not require a permit modification although written notification to the department is required within 30 days.
   c) Groundwater monitoring wells shall be maintained and closed in accordance with 10 CSR 23 Chapter 4 to protect waters of the state.
   d) If a well cannot be sampled for any reason, the permittee may report “no-discharge”. An explanation shall be provided to the department at that time.
   e) The facility shall collect groundwater quality samples at discrete intervals which must demonstrate each sample is independent and representative of the groundwater being monitored.
   f) The department may also modify the permit to change the sampling parameters incorporated within this permit at any time.
   g) The permittee shall continue to implement an effective groundwater monitoring program designed to determine if the coal ash impoundments have an impact on groundwater quality. The monitoring system must be capable of comparing up-gradient to down-gradient water quality in the first continuous water-bearing zone beneath the impoundment.
   h) If additional groundwater monitoring wells are required by the department,
      i) the additional wells may be placed without additional hydrogeological characterization of the impoundment area if the permittee can justify their location(s) through installation and sampling in consultation with the department. If additional hydrogeological characterization is warranted, it will be limited to the area of concern. Any hydrogeological characterization conducted for the design of the groundwater monitoring program shall be approved by the department's Missouri Geological Survey and must be conducted under the guidance of a geologist registered in the State of Missouri;
      ii) the Water Protection Program recommends using applicable portions of the document issued by the Missouri Geological Survey (MGS), dated December 10, 2010, *Guidance for Conducting a Detailed Hydrogeologic Site Characterization and Designing a Groundwater Monitoring Program* as guidance.; and
      iii) submit a Site Characterization Workplan and Site Characterization Report and Amended Groundwater Monitoring, Sampling and Analysis Plan (GMSAP) to the Water Protection Program for approval and verification of conclusions. The Amended Site Characterization Report shall detail additional monitoring locations to further characterize the site around the existing ash impoundments that may be impacting groundwater. The additional design of the groundwater monitoring network should be approved by the department prior to installation. However, if installation occurs prior to approval, the WPP and MGS reserves the right to insist on additional wells or changes to the network.

MISSOURI DEPARTMENT OF NATURAL RESOURCES
FACT SHEET
FOR THE PURPOSE OF RENEWAL & MODIFICATION
OF
MO-0004588
MISSOURI CITY POWER STATION-CLOSED

The Federal Water Pollution Control Act ("Clean Water Act" Section 402 Public Law 92-500 as amended) established the National Pollution Discharge Elimination System (NPDES) permit program. This program regulates the discharge of pollutants from point sources into the waters of the United States, and the release of stormwater from certain point sources. All such discharges are unlawful without a permit (Section 301 of the "Clean Water Act"). After a permit is obtained, a discharge not in compliance with all permit terms and conditions is unlawful. Missouri State Operating Permits (MSOPs) are issued by the Director of the Missouri Department of Natural Resources (Department) under an approved program, operating in accordance with federal and state laws (Federal "Clean Water Act" and "Missouri Clean Water Law" Section 644 as amended). MSOPs are issued for a period of five (5) years unless otherwise specified for less.

As per [40 CFR Part 124.8(a)] and [10 CSR 20-6.020(1)2.] a factsheet shall be prepared to give pertinent information regarding the applicable regulations, rationale for the development of effluent limitations and conditions, and the public participation process for the Missouri State Operating Permit (MSOP or operating permit) listed below. A factsheet is not an enforceable part of an operating permit.

Part I. FACILITY INFORMATION

Facility Type:	Categorical Industrial, Steam Electric Generating
Facility SIC Code(s):	4911
Facility NAICS Code:	221112
EPA Registry Id:	110001448979

Application Date:	08/05/2013	Expiration Date:	02/06/2014
Last Inspection:	08/08/2014	In Compliance	

FACILITY DESCRIPTION:

Missouri City Acquisition, LLC became the owner of Missouri City Power Station on July 31, 2017 from the City of Independence. Missouri Power Station operated under its previous permit as a peaking station. The City of Independence purchased the small coal-fired Missouri City plant from a rural electric cooperative in 1979.The Missouri City plant was originally constructed in 1952. The Missouri City Plant had a generating capacity of 42 MWs.

With the Industrial Boiler MACT regulations that went in effect on January 31, 2016, along with the revised 40 CFR 423, Coal Combustion Residuals Regulation, and the revised 316(b) studies required, Independence Power and Light decided to close the Missouri City Power Station. This operating permit reflects that the power station is closed and not operational. Appendix B includes a copy of the letter from Independence Power and Light certifying that they are not planning to operate the facility after January 31, 2016. With that certification, the 316(b) regulations are waived, as are the revised 40 CFR 423 effluent limit guidelines.

This permit removes stormwater monitoring from Outfalls #006, and #007, as based on the February 7, 2017 inspection the site qualifies for no exposure. Outfall #001 was removed as it was the non-contact cooling water discharge. Outfall #002 and Outfall #003 are removed as the ash impoundment is closed and capped and the facility is no longer creating process wastewater. If the facility is sold or retrofitted to be operational again, this permit must be modified 180 days before operations begin. If the facility begins operations again, requirements for 316(b) and the revised Steam Electric Generating Effluent Guideline (40 CFR 423) will be applicable.

The closest public drinking water treatment plant, Tri County Water Authority (MOG640185) has numerous wells on the southern bank of the Missouri River, approximately 5 miles downstream of the Missouri City Power Station.

The facility has expressed interest in reducing the number of parameters and the frequency of monitoring. The facility can request an operating permit modification when at least 8 quarterly samples have been collected at discrete intervals which demonstrate each sample is independent and representative of the groundwater being monitored.

Changes have occurred at this facility or in the receiving water body that effects effluent limit derivation.

- ✓ The facility ceased operations prior to January 31, 2016. The facility is undergoing closure activities, process and stormwater flows have been removed.
- ✓ Rose Branch is a newly classified stream.
- ✓ Outfalls #001, #002, and #003 were removed from monitoring as water is not being removed from the Missouri River to generate electricity and process wastewater is not being created.
- ✓ In correspondence with the facility, they indicated on October 14, 2015 that the coal pile is no longer present at the facility.
- ✓ Monitoring in the previous permit for stormwater outfalls (Outfalls #006 and #007) were removed as the facility would qualify for no exposure based on the inspection by the KCRO on February 7, 2017.
- ✓ Groundwater monitoring was established as part of an Enforcement Settlement Agreement and are established in this permit. As the facility has since closed and capped the ash impoundment, the groundwater monitoring is to document potential impacts to groundwater and to address concerns on the previously completed sampling regarding: detection limits of analytical methods, the appropriate analytical method used, and appropriate field sampling techniques (field filtering of samples).

FACILITY MAP:

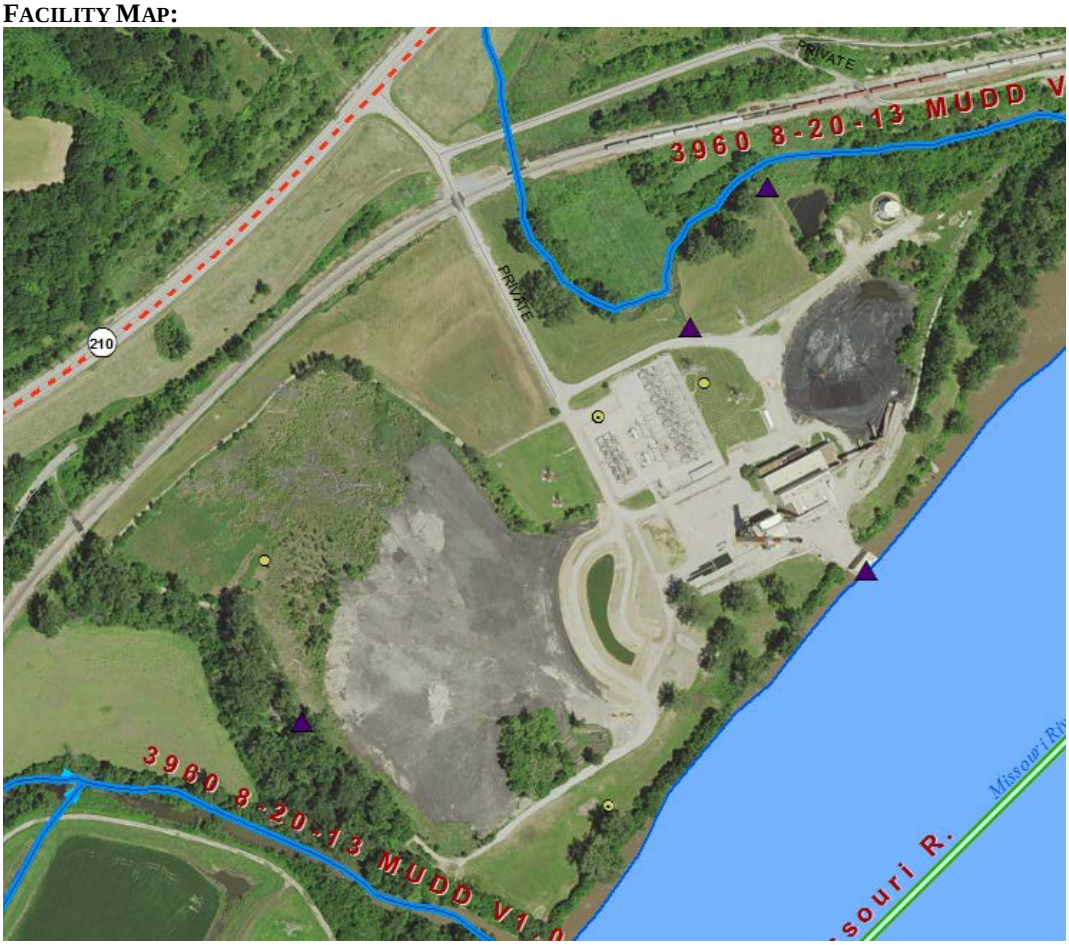

The yellow dots are groundwater monitoring wells.

Part II. Receiving Stream Information

Receiving Water Body's Water Quality:
Rose Branch (C) (3960) is now classified whereas it was not classified in the previous permit, as EPA has approved the Department's new stream classifications.

303(d) List:
Section 303(d) of the federal Clean Water Act requires each state identify waters not meeting water quality standards and for which adequate water pollution controls have not been required. Water quality standards protect such beneficial uses of water as whole body contact (such as swimming), maintaining fish and other aquatic life, and providing drinking water for people, livestock, and wildlife. The 303(d) list helps state and federal agencies keep track of impaired waters not addressed by normal water pollution control programs. http://dnr.mo.gov/env/wpp/waterquality/303d/303d.htm

- ✓ Applicable; Missouri River is listed on the 2012 Missouri 303(d) List for *E. coli*.
- ✓ This facility is not considered to be a source of the above listed pollutant(s) or considered to contribute to the impairment of Missouri River.

Total Maximum Daily Load (TMDL):
A TMDL is a calculation of the maximum amount of a given pollutant that a body of water can absorb before its water quality is affected; hence, the purpose of a TMDL is to determine the pollutant loading a specific waterbody can assimilate without exceeding water quality standards. If a water body is determined to be impaired as listed on the 303(d) list, then a watershed management plan or TMDL may be developed. The TMDL shall include the WLA calculation. http://dnr.mo.gov/env/wpp/tmdl/

- ✓ Applicable; The Missouri River is associated with the 2006 EPA approved TMDL for chlordane and PCBs.
    - o This facility is not considered to be a source of the above listed pollutant(s) or considered to contribute to the impairment.

Applicable Designations of Waters of the State:

- ✓ As per Missouri's Effluent Regulations [10 CSR 20-7.015(1)(B)], the waters of the state are divided into the following seven categories. Each category lists effluent limitations for specific parameters, which are presented in each outfall's effluent limitation table and further discussed in the derivation & discussion of limits section.

Missouri or Mississippi River: ☐
Lake or Reservoir: ☐
Losing: ☐
Metropolitan No-Discharge: ☐
Special Stream: ☐
Subsurface Water: ☒
All Other Waters: ☐

Receiving Streams Table:
Mixing Considerations:
Mixing zone: not allowed [10 CSR 20-7.031(5)(A)4.B.(I)(a)].
Zone of initial dilution: not allowed [10 CSR 20-7.031(5)(A)4.B.(I)(b)].

Thermal Mixing Considerations:
Not applicable; as the facility is no longer in operations, thermal mixing considerations and thermal effluent limits are not applicable.

Receiving Stream Monitoring Requirements:
No receiving water monitoring requirements are recommended at this time.

Part III. Rationale and Derivation of Effluent Limitations & Permit Conditions

Alternative Evaluations for New Facilities:
As per [10 CSR 20-7.015(4)(A)], discharges to losing streams shall be permitted only after other alternatives including land application, discharges to a gaining stream and connection to a regional wastewater treatment facility have been evaluated and determined to be unacceptable for environmental and/or economic reasons.

- ✓ Not applicable; the facility does not discharge to a losing stream as defined by [10 CSR 20-2.010(36)] & [10 CSR 20-7.031(1)(N)], or is an existing facility.

ANTI-BACKSLIDING:
Federal Regulations [CWA §303(d)(4); CWA §402(c); 40 CFR Part 122.44(I)] require a reissued permit to be as stringent as the previous permit with some exceptions. Backsliding (a less stringent permit limitation) is only allowed under certain conditions.

- ✓ Limitations in this operating permit for the reissuance conform to the anti-backsliding provisions of Section 402(o) of the Clean Water Act, and 40 CFR Part 122.44.
  - ✓ Material and substantial alterations or additions to the permitted facility occurred after permit issuance which justify the application of a less stringent effluent limitation. The facility ceased operations on January 31, 2016.
    - With the ceasing of operations, monitoring requirements and effluent limits from Outfalls #001-#003, #006 and #007 were removed as the facility is no longer discharging process or storm water.
    - In June 2016, Missouri City completed the cap installation over the ash impoundments and process wastewater discharges stopped from Outfalls #002 and #003.
    - WET test removal from Outfall #002 as the impoundment is no longer receiving process wastewater and has not since 2012. Until the impoundment was completely closed, stormwater could be discharged through Outfall #002. WET test are not reproducible with stormwater and the previous permit had acute WET test completed on a pass/fail method, which did not provide numeric results on if reasonable potential existed.

ANTIDEGRADATION REVIEW:
For process water discharge with new, altered, or expanding discharges, the department is to document, by means of antidegradation review, if the use of a water body's available assimilative capacity is justified. In accordance with Missouri's water quality regulations for antidegradation [10 CSR 20-7.031(3)], degradation may be justified by documenting the socio-economic importance of a discharge after determining the necessity of the discharge. Facilities must submit the antidegradation review request to the department prior to establishing, altering, or expanding discharges. See http://dnr.mo.gov/env/wpp/permits/antideg-implementation.htm

- ✓ Not applicable; the facility has not submitted information proposing expanded or altered process water discharge; no further degradation proposed therefore no further review necessary.

COAL ASH IMPOUNDMENT:
The 22 acre coal ash impoundment is classified as an inactive impoundment under 40 CFR 257 (the Coal Combustion Residuals Rule) as it ceased receiving coal ash prior to October 19, 2015. According to Department records, the impoundment was constructed in the 1970s. IPL submitted notification of intent to initiate closure of the ponds to the department on September 25, 2015 (Appendix A-1) and certification of completion of closure on September 27, 2016. As part of IPL's Settlement Agreement with the department, IPL completed preliminary characterization around the ash impoundment. IPL with the help of HDR submitted Ash Impoundment Closure Plan and SWPPP to the department on June 11, 2015. The ash impoundment was capped in June 2016.

COMPLIANCE AND ENFORCEMENT:
Enforcement is the action taken by the Water Protection Program (WPP) to bring an entity into compliance with the Missouri Clean Water Law, its implementing regulations, and/or any terms and conditions of an operating permit. The primary purpose of the enforcement activity in the WPP is to resolve violations and return the entity to compliance.

- ✓ Not Applicable; the permittee/facility was under enforcement action due to observed heavy vegetation covering the fly ash storage basin; fly ash material piled above the berm in several locations; and documented extensive damage to the berms. Staff also observed trees growing throughout the internal and external structure of the fly ash storage basin. On March 12, 2009 the Department issued Notice of Violation to the City for failure to operate and maintain facilities to comply with the Law. On June 22, 2011 a Settlement Agreement was executed and signed by the City and the Department which included the cessation of wet sluicing of coal fly ash and closure of the fly ash storage basin. The facility returned to compliance in 2016 with the cap being placed over the ash impoundments.

EFFLUENT LIMITATION GUIDELINE:
Effluent Limitation Guidelines, or ELGs, are found at 40 CFR 400-499. These are limitations established by the EPA based on the SIC code and the type of work a facility is conducting. Most ELGs are for process wastewater and some address stormwater. All are technology based limitations which must be met by the applicable facility at all times.

- ✓ The facility has an associated ELG (40 CFR 423) but does not discharge wastewater to waters of the state; groundwater monitoring and potential discharges are not addressed by the ELG.

ELECTRONIC DISCHARGE MONITORING REPORT (EDMR) SUBMISSION SYSTEM:
The U.S. Environmental Protection Agency (EPA) promulgated a final rule on October 22, 2015, to modernize Clean Water Act reporting for municipalities, industries, and other facilities by converting to an electronic data reporting system. This final rule requires regulated entities and state and federal regulators to use information technology to electronically report data required by the National Pollutant Discharge Elimination System (NPDES) permit program instead of filing paper reports. To comply with the federal rule, the Department is requiring all permittees to begin submitting discharge monitoring data and reports online.

Per 40 CFR 127.15 and 127.24, permitted facilities may request a temporary waiver for up to 5 years or a permanent waiver from electronic reporting from the Department. To obtain an electronic reporting waiver, a permittee must first submit an eDMR Waiver Request Form: http://dnr.mo.gov/forms/780-2692-f.pdf. A request must be made for each facility. If more than one facility is owned or operated by a single entity, then the entity must submit a separate request for each facility based on its specific circumstances. An approved waiver is non-transferable.

The Department must review and notify the facility within 120 calendar days of receipt if the waiver request has been approved or rejected [40 CFR 124.27(a)]. During the Department review period as well as after a waiver is granted, the facility must continue submitting a hard-copy of any reports required by their permit. The Department will enter data submitted in hard-copy from those facilities allowed to do so and electronically submit the data to the EPA on behalf of the facility.

✓ The permittee/facility is currently using the eDMR data reporting system.

GROUNDWATER MONITORING:

Groundwater is a water of the state according to 10 CSR 20-7.015(7) and 10 CSR 20-7.031(6) and must be protected accordingly.

✓ This facility is monitoring the groundwater at the site. The groundwater monitoring was initiated as part of the department's Water Protection Program's enforcement actions. The facility has collected a year of groundwater data on a monthly interval from ten piezometers and wells. Those piezometers and wells have been added to the permit as permitted features with quarterly monitoring. The quarterly monitoring as the facility completes closure activities and closes out conduits to the ash pond will provide information on the potential impacts on groundwater. With the data collected so far, there is concern that the existing groundwater monitoring network does not fully characterize the site; as such, the facility is required to complete further characterization onsite and install additional monitoring wells. The additional groundwater monitoring and characterization is to provide sufficient data in the future to determine if reasonable potential exists to exceed water quality standards and if effluent limits/alternative limits or risk based limits are required.

Currently the monitoring well network at the site is comprised of 11 monitoring wells (PZ-1, PZ-2, PZ-3, PZ-4,PZ-6, PZ-7, PZ-10, PZ-11, PZ-12 and MW-1), a piezometer (PZ-5), and a Missouri River Gauge monitoring point (RG-1). Additionally, four operational process water wells (PW-1, PW-2, PW-3, and PW-4) were located at the Site and were properly abandoned in 2018.

Many of the constituents of concern when sampling for coal combustion residuals can be found at 10 CSR 80-11.010 Appendix I. While molybdenum is not listed within the Missouri regulations, the EPA's technical document EPA-821-R-13-002 (2013) Section 6 and Table 10-7 delineates pollutants and contaminants of concern for fly ash transport water, untreated impoundment leachate, and pollutant concentrations within fly and bottom ash. At this time, the department feels it necessary to fully classify groundwater contaminants coming from CCR storage areas by sampling for all constituents listed in Appendix I and molybdenum. Additional constituents may be added as new information becomes available. Conversely, constituents may be removed if fully demonstrated the contaminants do not occur on site.

Monitoring is required for total metals in groundwater because 10 CSR 20-7.031(5)(B)2.A. requires for aquatic life protection and human health protection-fish consumption (I) Mercury- total recoverable metals, and (II) All other metals- dissolved metals. Additionally, 10 CSR 20-7.031(5)(B)2.C. states "all other beneficial uses- total recoverable metals" which includes groundwater. Because this facility's ash ponds occur within the alluvium, the pathway from groundwater to surface water is apparent; aquatic life protection does apply.

The facility has expressed interest in reducing the number of parameters and the frequency of monitoring. The facility can request an operating permit modification when 8 quarterly samples have been collected. This permit only requires the groundwater monitoring in total recoverable, unlike under the samples collected previously were both total recoverable and dissolved. Parameters not expected in coal ash were removed from the monitoring list.

Citations and Sources
10 CSR 20-7.031; Table A.
10 CSR 80-11.010; Appendix I. Parameters in the above sampling table were predominantly obtained from the Utility Waste Landfill Appendix I list.
EPA-821-R-13-002 (2013) "Technical Development Document for the Proposed Effluent Limitations Guidelines and Standards for the Steam Electric Power Generating Point Source Category"

SCHEDULE OF COMPLIANCE (SOC):

A schedule of remedial measures included in a permit, including an enforceable sequence of interim requirements (actions, effluent limits, operations, or milestone events) leading to compliance with the Missouri Clean Water Law, its implementing regulations, and/or the terms and conditions of an operating permit. SOCs are allowed under 40 CFR 122.47 providing certain conditions are met.

✓ Not applicable; this permit does not contain a SOC.

TECHNOLOGY-BASED EFFLUENT LIMITATIONS (TBEL):
One of the major strategies of the Clean Water Act (CWA) in making "reasonable further progress toward the national goal of eliminating the discharge of all pollutants" is to require effluent limitations based on the capabilities of the technologies available to control those discharges. Technology-based effluent limitations (TBELs) aim to prevent pollution by requiring a minimum level of effluent quality attainable using demonstrated technologies for reducing discharges of pollutants or pollution into the waters of the United States. TBELs are developed independently of the potential impact of a discharge on the receiving water, which is addressed through water quality standards and water quality-based effluent limitations (WQBELs). The NPDES regulations at Title 40 of the Code of Federal Regulations (CFR) 125.3(a) require NPDES permit writers to develop technology-based treatment requirements, consistent with CWA § 301(b) and § 402(a)(1), represent the minimum level of control that must be imposed in a permit. The regulation also indicates that permit writers must include in permits additional or more stringent effluent limitations and conditions, including those necessary to protect water quality. Regardless of the technology chosen to be the basis for limitations, the facility is not required to install the technology, only to meet the established TBEL.

- ✓ Not applicable; this facility does not discharge process wastewater therefore is not subject to TBEL POC analysis.

VARIANCE:
Per the Missouri Clean Water Law §644.061.4, variances shall be granted for such period of time and under such terms and conditions as shall be specified by the commission in its order. The variance may be extended by affirmative action of the commission. In no event shall the variance be granted for a period of time greater than is reasonably necessary for complying with the Missouri Clean Water Law §§644.006 to 644.141 or any standard, rule or regulation promulgated pursuant to Missouri Clean Water Law §§644.006 to 644.141.

- ✓ Not applicable; the operating permit is not drafted under premise of a petition for variance.

WASTELOAD ALLOCATIONS (WLA) FOR LIMITS:
As per [10 CSR 20-2.010(78)], the WLA is the amount of pollutant each discharger is allowed to discharge into the receiving stream without endangering water quality. Two general types of effluent limitations, technology-based effluent limits (TBELs) and water quality based effluent limits (WQBELs) are reviewed. If one limit does provide adequate protection for the receiving waters, then the other must be used.

- ✓ Not applicable; wasteload allocations were not calculated.

WLA MODELING:
Permittees may submit site specific studies to better determine the site specific wasteload allocations applied in permits.

- ✓ Not applicable; a WLA study was not submitted.

WHOLE EFFLUENT TOXICITY (WET) TEST:
A WET test is a quantifiable method of determining if a discharge from the facility may be causing toxicity to aquatic life by itself, in combination with, or through synergistic responses, when mixed with receiving stream water.

- ✓ Not applicable; at this time, the permittee is not required to conduct WET testing for this facility. WET testing is not relevant to groundwater.

316(a) THERMAL DISCHARGES
Section 316(a) of the Clean Water Act (CWA) applies to point sources with thermal discharges. It authorizes the NPDES permitting authority to impose alternative effluent limitations for the control of the thermal component of a discharge in lieu of the effluent limits that would otherwise be required under section 301 or 306 of the CWA. Regulations implementing section 316(a) are codified at 40 CFR Part 125, subpart H. These regulations identify the criteria and process for determining whether an alternative effluent limitation (i.e., thermal variance from the otherwise applicable effluent limit) may be included in a permit. This means that before a thermal variance can be granted, 40 CFR Parts 125.72 and 125.73 require the permittee to demonstrate that the protection and propagation of the waterbody's balanced, indigenous population (BIP) of shellfish, fish, and wildlife is being attained.

- ✓ Not applicable; the facility is no longer discharging non-contact cooling water through Outfall #001 and as such, compliance with temperature requirements and 316(a) requirements are not required with this permit. If the facility becomes operational again, the facility will be required to be in compliance with thermal effluent limits and the requirements in 316(a).

316(b) COOLING WATER INTAKE STRUCTURE
Section 316(b) of the Clean Water Act (CWA) applies to new or existing facilities operating a cooling water intake structure (CWIS). Section 316(b) requires that location, design, construction, and capacity of CWISs reflect the best technology available (BTA) for minimizing adverse environmental impacts (AEI). Under current regulations, existing facilities are subject to section 316(b) conditions that reflect BTA for minimizing AEI on a case-by-case, best professional judgment (BPJ) basis.

- ✓ Not applicable; the facility has closed and as such is not required to conduct the studies required under 40 CFR 122.21(r) for impingement and entrainment. If the facility becomes operational again, the facility will be required to conduct the studies.

Part IV. Effluent Limits Determination

Permitted Feature MW-1, PZ-1through PZ-4, PZ6 Through P7, PZ-9 through PZ-12

Groundwater Monitoring **Effluent Limitations Table:**

PARAMETERS	Unit	Basis for Limits	Daily Max	Monthly Avg	Minimum Reporting Frequency	Sample Type
Field Parameters						
pH	SU	1,6	*	*	once/quarter	grab
Conductivity	µMohs/cm	1,6	*	*	once/quarter	grab
Oxidation/Reduction Potential (ORP)	/cm	1,6	*	*	once/quarter	grab
Depth to Water	foot	1,6	*	*	once/quarter	grab
Turbidity	NTU	1,6	*	*	once/quarter	grab
Organics						
Sulfate as SO_4	mg/L	1,6	*	*	once/quarter	grab
Conventional						
Hardness as $CaCO_3$	mg/L	1,6	*	*	once/quarter	grab
Total Dissolved Solids (TDS)	mg/L	1,6	*	*	once/quarter	grab
Radionuclides						
Radium 226 (^{226}Ra)	pCi/L	1,6	*	*	once/year	grab
Radium 228 (^{228}Ra)	pCi/L	1,6	*	*	once/Year	grab
Metals						
Arsenic, TR	µg/L	1,6	*	*	once/quarter	grab
Aluminum, TR	µg/L	1,6	*	*	once/quarter	grab
Antimony, TR	µg/L	1,6	*	*	once/quarter	grab
Barium, TR	µg/L	1,6	*	*	once/quarter	grab
Boron, TR	µg/L	1,6	*	*	once/quarter	grab
Cadmium, TR	µg/L	1,6	*	*	once/quarter	grab
Chromium, Total	µg/L	1,6	*	*	once/quarter	grab
Cobalt, TR	µg/L	1,6	*	*	once/quarter	grab
Iron, TR	µg/L	1,6	*	*	once/quarter	grab
Lead, TR	µg/L	1,6	*	*	once/quarter	grab
Lithium, TR	µg/L	1,6	*	*	once/quarter	grab
Mercury, TR	µg/L	1,6	*	*	once/quarter	grab
Molybdenum, TR	µg/L	1,6	*	*	once/quarter	grab
Selenium, Dissolved	µg/L	1,6	*	*	once/quarter	grab
Zinc, TR	µg/L	1,6	*	*	once/quarter	grab

* - Monitoring requirement only

Basis for Limitations Codes:

1. State or Federal Regulation/Law
2. Water Quality Standard (includes RPA)
3. Water Quality Based Effluent Limits
4. Antidegradation Review/Policy
5. Water Quality Model
6. Best Professional Judgment
7. TMDL or Permit in lieu of TMDL
8. Benchmark based on MSGP

Many of the constituents of concern when sampling for coal combustion residuals can be found at 10 CSR 80-11.010 Appendix I. While molybdenum is not listed within the Missouri regulations, the EPA's technical document EPA-821-R-13-002 (2013) Section 6 and Table 10-7 delineates pollutants and contaminants of concern for fly ash transport water, untreated impoundment leachate, and pollutant concentrations within fly and bottom ash. At this time, the department feels it necessary to fully classify groundwater contaminants coming from CCR storage areas by sampling for constituents listed in Appendix I and molybdenum. Additional constituents may be added as new information becomes available. Conversely, constituents may be removed if fully demonstrated the contaminants do not occur on site.

Monitoring is required for total in groundwater because 10 CSR 20-7.031(5)(B)2.A. requires for aquatic life protection and human health protection-fish consumption (I) Mercury- total recoverable metals, and (II) All other metals- dissolved metals. Additionally, 10 CSR 20-7.031(5)(B)2.C. states "all other beneficial uses- total recoverable metals" which includes groundwater. Because many facilities' ash ponds occur within the alluvium, the pathway from groundwater to surface water is apparent; aquatic life protection does apply.

Part V. Sampling and Reporting Requirements:

Refer to each outfall's derivation and discussion of limits section to review individual sampling and reporting frequencies and sampling type. Additionally, see Standard Conditions Part I attached at the end of this permit and fully incorporated within.

Sampling Frequency Justification:
Sampling frequency will be quarterly for groundwater monitoring. This requirement is in-line with other facilities doing this type of monitoring and provides temporal separation of the samples. See table in Section A of the permit for frequencies.

Sampling Type Justification:
Grab samples are appropriate for groundwater monitoring.

Sufficiently Sensitive Analytical Methods:
Please review Standard Conditions Part 1, section A, number 4. The analytical and sampling methods used shall conform to the reference methods listed in 10 CSR 20-7.015 and/or 40 CFR 136 unless alternates are approved by the department. The facility shall use sufficiently sensitive analytical methods for detecting, identifying, and measuring the concentrations of pollutants. The facility shall ensure the selected methods are able to quantify the presence of pollutants in a given discharge at concentrations that are low enough to determine compliance with Water Quality Standards in 10 CSR 20-7.031 or effluent limitations unless provisions in the permit allow for other alternatives. A method is "sufficiently sensitive" when; 1) the method quantifies the pollutant below the level of the applicable water quality criterion or; 2) the method minimum level is above the applicable water quality criterion, but the amount of pollutant in a facility's discharge is high enough that the method detects and quantifies the level of pollutant in the discharge, or 3) the method has the lowest minimum level of the analytical methods approved under 10 CSR 20-7.015 and or 40 CFR 136. These methods are also required for parameters listed as monitoring only, as the data collected may be used to determine if numeric limitations need to be established. A permittee is responsible for working with their contractors to ensure the analysis performed is sufficiently sensitive. 40 CFR 136 lists the approved methods accepted by the department. Table A at 10 CFR 20-7.031 shows water quality standards.

Part VI. Administrative Requirements

On the basis of preliminary staff review and the application of applicable standards and regulations, the Department, as administrative agent for the Missouri Clean Water Commission, proposes to issue a permit(s) subject to certain effluent limitations, schedules, and special conditions contained herein and within the operating permit. The proposed determinations are tentative pending public comment.

Permit Synchronization:
The Department of Natural Resources is currently undergoing a synchronization process for operating permits. Permits are normally issued on a five-year term, but to achieve synchronization many permits will need to be issued for less than the full five years allowed by regulation. The intent is that all permits within a watershed will move through the Watershed Based Management (WBM) cycle together will all expire in the same fiscal year. http://dnr.mo.gov/env/wpp/cpp/docs/watershed-based-management.pdf. This will allow further streamlining by placing multiple permits within a smaller geographic area on public notice simultaneously, thereby reducing repeated administrative efforts. This will also allow the department to explore a watershed based permitting effort at some point in the future. Renewal applications must continue to be submitted within 180 days of expiration, however, in instances where effluent data from the previous renewal is less than three years old, that data may be re-submitted to meet the requirements of the renewal application. If the permit provides a schedule of compliance for meeting new water quality based effluent limits beyond the expiration date of the permit, the time remaining in the schedule of compliance will be allotted in the renewed permit.

✓ This permit is not being synchronized at this time because it is a groundwater permit, with no surface discharges.

PUBLIC NOTICE:
The Department shall give public notice that a draft permit has been prepared and its issuance is pending. http://dnr.mo.gov/env/wpp/permits/pn/index.html. Additionally, public notice will be issued if a public hearing is to be held because of a significant degree of interest in and water quality concerns related to a draft permit. No public notice is required when a request for a permit modification or termination is denied; however, the requester and permittee must be notified of the denial in writing.

The Department must issue public notice of a pending operating permit or of a new or reissued statewide general permit. The public comment period is the length of time not less than 30 days following the date of the public notice which interested persons may submit written comments about the proposed permit. For persons wanting to submit comments regarding this proposed operating permit, then please refer to the Public Notice page located at the front of this draft operating permit. The Public Notice page gives direction on how and where to submit appropriate comments.

☒ - The Public Notice period for this operating permit was from January 4, 2019 to February 4, 2019. No responses received.

DATE OF FACT SHEET: NOVEMBER 8, 2018

COMPLETED BY:
LEASUE MEYERS, EI
MISSOURI DEPARTMENT OF NATURAL RESOURCES
WATER PROTECTION PROGRAM
leasue.meyers@dnr.mo.gov

APPENDIX A: FACILITY CLOSURE LETTER

APPENDIX A-1: SEPTEMBER 4, 2013 IMPACT OF THE INDUSTRIAL BOILER MACT LETTER

City of Independence

POWER & LIGHT DEPARTMENT
21500 E. TRUMAN ROAD • P.O. BOX 1019 • INDEPENDENCE, MISSOURI 64051-0519 (816) 325-7500
www.ci.independence.mo.us FAX (816) 325-7470

September 4, 2013

Joan Doerhoff
Compliance and Enforcement Section Chief
Water Pollution Control Program
Missouri Department of Natural Resources
PO Box 176
Jefferson City, MO 65102

Re: Impact of the Industrial Boiler MACT (IBMACT) on Missouri City Power Plant (MO-004588)

Dear Ms. Doerhoff:

On December 20, 2012, EPA issued the final IBMACT—a rule intended to reduce hazardous air pollutants (HAPS) emissions from existing and new industrial, commercial and institutional boilers and process heaters located at major sources. This regulation sets very low emission standards for mercury, carbon monoxide and hydrochloric acid beginning on January 31, 2016. In order to meet these standards, units will need to fuel switch from coal to a fuel with much lower emissions (natural gas or biomass), install costly pollution controls, or cease generation. Currently IPL has not identified any cost effective fuel switching options and the addition of pollution control equipment is prohibitively expensive. Consequently, IPL will be undertaking the process of ceasing generation at the Missouri City Plant and will do so on or before January 30, 2016, unless the there are changes to or delays in the implementation of the IBMACT rule.

If you wish to discuss this or other matters, please contact me at (816) 325-7455 or cholder@indepmo.org.

Sincerely,

Eric Holder
Environmental Program Supervisor, IPL

cc: Leon Daggett, IPL
Andrea Collier, KCRO Director
Leasue Meyers, WPCP
Scott Honig, KCRO

RECEIVED

AP16072 C11883

AUG - 5 2013

WATER PROTECTION PROGRAM

MISSOURI DEPARTMENT OF NATURAL RESOURCES
WATER PROTECTION PROGRAM, WATER POLLUTION CONTROL BRANCH
FORM A – APPLICATION FOR CONSTRUCTION OR OPERATING PERMIT UNDER MISSOURI CLEAN WATER LAW

FOR AGENCY USE ONLY	
CHECK NUMBER	
DATE RECEIVED 8/5/13	FEE SUBMITTED 08B

Note ▶ PLEASE READ THE ACCOMPANYING INSTRUCTIONS BEFORE COMPLETING THIS FORM.

1. This application is for:

- ☐ An operating permit and antidegradation review public notice
- ☐ A construction permit following an appropriate operating permit and antidegradation review public notice
- ☐ A construction permit and concurrent operating permit and antidegradation review public notice
- ☐ A construction permit (submitted before Aug. 30, 2008 or antidegradation review is not required)
- ☐ An operating permit for a new or unpermitted facility — Construction Permit # _____
- ☑ An operating permit renewal: permit # MO- 0004588 — Expiration Date 2/5/2014
- ☐ An operating permit modification: permit # MO-_____ — Reason: _____

1.1 Is the appropriate fee included with the application? (See instructions for appropriate fee) ☐ YES ☑ NO

2. FACILITY

NAME		TELEPHONE WITH AREA CODE	
Missouri City Power Station		(816) 325-7520	
		FAX (816) 750-7474	
ADDRESS (PHYSICAL)	CITY	STATE	ZIP CODE
22225 210 Highway	Missouri City	MO	64072

3. OWNER

NAME	E-MAIL ADDRESS	TELEPHONE WITH AREA CODE	
Independence Power and Light	eholder@indepmo.o	(816) 325-7500	
		FAX (816) 750-7474	
ADDRESS (MAILING)	CITY	STATE	ZIP CODE
P.O. Box 1019	Independence	MO	64051

3.1 Request review of draft permit prior to public notice? ☑ YES ☐ NO

4. CONTINUING AUTHORITY

NAME		TELEPHONE WITH AREA CODE	
Independence Power and Light		(816) 325-7500	
		FAX (816) 750-7474	
ADDRESS (MAILING)	CITY	STATE	ZIP CODE
P.O. Box 1019	Independence	MO	64051

5. OPERATOR

NAME	CERTIFICATE NUMBER	TELEPHONE WITH AREA CODE	
NA			
		FAX	
ADDRESS (MAILING)	CITY	STATE	ZIP CODE

6. FACILITY CONTACT

NAME	TITLE	TELEPHONE WITH AREA CODE
Eric Holder	Environmental Program Manager	(816) 325-7455
		FAX (816) 325-7474

7. ADDITIONAL FACILITY INFORMATION

7.1 Legal Description of Outfalls. (Attach additional sheets if necessary.)

001 SE ¼ NE ¼ Sec 18 T 51N R 30W Clay County
UTM Coordinates Easting (X): 387144 Northing (Y): 4343206
For Universal Transverse Mercator (UTM), Zone 15 North referenced to North American Datum 1983 (NAD83)

002 SE ¼ NE ¼ Sec 18 T 51N R 30W Clay County
UTM Coordinates Easting (X): 386821 Northing (Y): 4343238

006 ~~003~~ SE ¼ NE ¼ Sec 18 T 51 R 30W Clay County
UTM Coordinates Easting (X): 386981 Northing (Y): 4343206

007 ~~004~~ SE ¼ NE ¼ Sec 18 T 51N R 30W Clay County
UTM Coordinates Easting (X): 387075 Northing (Y): 4343516

7.2 Primary Standard Industrial Classification (SIC) and Facility North American Industrial Classification System (NAICS) Codes.

001 – SIC 4911 and NAICS 221112 002 – SIC 4911 and NAICS 221112
006 ~~003~~ – SIC 4911 and NAICS 221112 007 ~~004~~ – SIC 4911 and NAICS 221112

MO 780-1479 (01-09)

7.1 (continued) Outfall 003 SE 1/4, NE 1/4, Section 18, T51N, R30W,
Clay County Easting (X): 386996 Northing (Y): 4343155
7.2 (continued) Outfall 003 SIC 4911, NAICS 221112

8. ADDITIONAL FORMS AND MAPS NECESSARY TO COMPLETE THIS APPLICATION (Complete all forms that are applicable.)

A. Is your facility a manufacturing, commercial, mining or silviculture waste treatment facility? YES ☐ NO ☑
If yes, complete Form C (unless storm water only, then complete U.S. Environmental Protection Agency Form 2F per Item C below).

B. Is your facility considered a "Primary Industry" under EPA guidelines: YES ■ NO ☐
If yes, complete Forms C and D.

C. Is application for storm water discharges only? YES ☐ NO ☑
If yes, complete EPA Form 2F.

D. Attach a map showing all outfalls and the receiving stream at 1" = 2,000' scale.

E. Is wastewater land applied? If yes, complete Form I. YES ☐ NO ☑

F. Is sludge, biosolids, ash or residuals generated, treated, stored or land applied? YES ☐ NO ☑
If yes, complete Form R.

9. DOWNSTREAM LANDOWNER(S) Attach additional sheets as necessary. See Instructions.
(PLEASE SHOW LOCATION ON MAP. SEE 8.D ABOVE).

The discharge from the Plant outfall flows directly into the Missouri River or flows into the river via Rose Branch Creek. There are no downgradient properties. The substation on the property is owned by NW Electric Power Co-Op, Inc. Drainage from the substation via Outfall 006 is located on property owned by NW Electric Power Co-Op, Inc. The owner address for NW Electric Power Co-Op, Inc. is PO Box 565, Cameron, MO 64429-0565. The railroad on the north side of the Plant is owned by Norfolk & Western Railroad.

10. I certify that I am familiar with the information contained in the application, that to the best of my knowledge and belief such information is true, complete and accurate, and if granted this permit, I agree to abide by the Missouri Clean Water Law and all rules, regulations, orders and decisions, subject to any legitimate appeal available to applicant under the Missouri Clean Water Law to the Missouri Clean Water Commission.

NAME AND OFFICIAL TITLE (TYPE OR PRINT)	TELEPHONE WITH AREA CODE
E. Leon Daggett, Director	(816) 325-7437
SIGNATURE E. Leon Daggett	DATE SIGNED 8/2/2013

MO 780-1479 (01-09)

BEFORE MAILING, PLEASE ENSURE ALL SECTIONS ARE COMPLETED AND ADDITIONAL FORMS, IF APPLICABLE, ARE INCLUDED.

Submittal of an incomplete application may result in the application being returned.

HAVE YOU INCLUDED:

- ☐ Appropriate Fees?
- ☐ Map at 1" = 2000' scale?
- ☐ Signature?
- ☐ Form C, if applicable?
- ☐ Form D, if applicable?
- ☐ Form 2F, if applicable?
- ☐ Form I (Irrigation), if applicable?
- ☐ Form R (Sludge), if applicable?

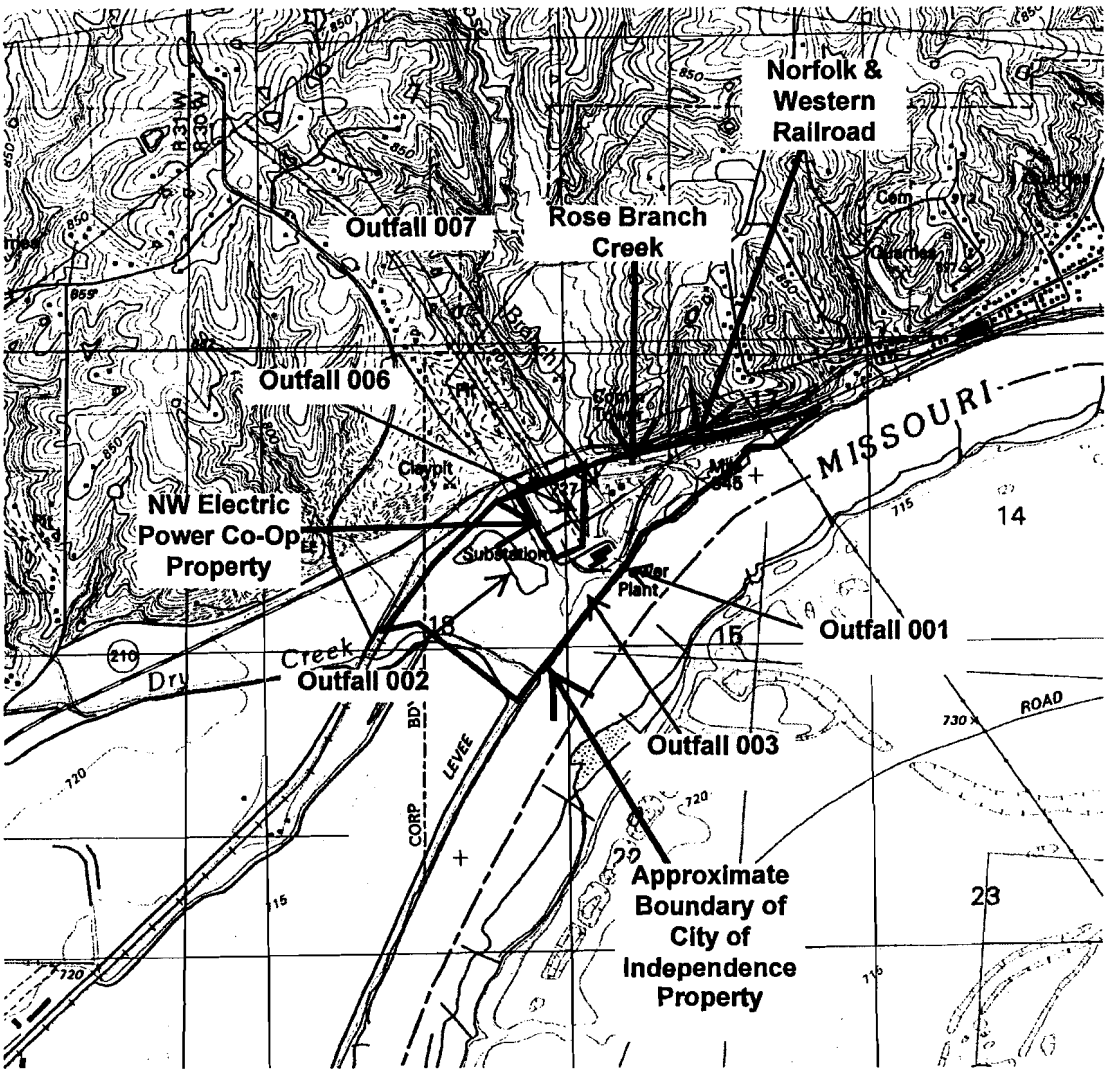

N
W E
S

Note: 7.5-Minute 1990 Missouri City, MO
USGS Quadrangle

Burns & McDonnell
SINCE 1898

FIGURE 1
SITE LOCATION MAP
MISSOURI CITY POWER STATION
MISSOURI CITY, MO

MISSOURI DEPARTMENT OF NATURAL RESOURCES
WATER PROTECTION PROGRAM, WATER POLLUTION BRANCH

FORM C – APPLICATION FOR DISCHARGE PERMIT – MANUFACTURING, COMMERCIAL, MINING, SILVICULTURE OPERATIONS, PROCESS AND STORMWATER

FOR AGENCY USE ONLY	
CHECK NO.	
DATE RECEIVED	FEE SUBMITTED

NOTE: DO NOT ATTEMPT TO COMPLETE THIS FORM BEFORE READING THE ACCOMPANYING INSTRUCTIONS

1.00 NAME OF FACILITY

Missouri City Power Station

1.10 THIS FACILITY IS NOW IN OPERATION UNDER MISSOURI OPERATING PERMIT NUMBER

MO-0004588

1.20 THIS IS A NEW FACILITY AND WAS CONSTRUCTED UNDER MISSOURI CONSTRUCTION PERMIT NUMBER (COMPLETE ONLY IF THIS FACILITY DOES NOT HAVE AN OPERATING PERMIT).

2.00 LIST THE STANDARD INDUSTRIAL CLASSIFICATION (SIC) CODES APPLICABLE TO YOUR FACILITY (FOUR DIGIT CODE)

A. FIRST 4911 B. SECOND _____

C. THIRD _____ D. FOURTH _____

2.10 FOR EACH OUTFALL GIVE THE LEGAL DESCRIPTION.

OUTFALL NUMBER (LIST) _____ 1/4 _____ 1/4 SEC _____ T _____ R _____ _____ COUNTY

Outfall 001: SE 1/4, NE 1/4, SEC 18, T51N, R30W, Clay County
Outfall 002: SE 1/4, NE 1/4, SEC 18, T51N, R30W, Clay County
Outfall 006: SE 1/4, NE 1/4, SEC 18, T51N, R30W, Clay County
Outfall 007: SE 1/4, NE 1/4, SEC 18, T51N, R30W, Clay County
Outfall 003: SE 1/4, NE 1/4, SEC 18, T51N, R30W, Clay County

2.20 FOR EACH OUTFALL LIST THE NAME OF THE RECEIVING WATER

OUTFALL NUMBER (LIST)	RECEIVING WATER
Outfall 001 (Non-contact cooling water)	Missouri River
Outfall 002 (Former ash lagoon)	Dry Creek
Outfall 006 (Storm water runoff)	Rose Branch Creek
Outfall 007 (Coal pile runoff)	Rose Branch Creek
Outfall 003 (New pond)	Missouri River

2.30 BRIEFLY DESCRIBE THE NATURE OF YOUR BUSINESS

Electric power generation for the City of Independence, Missouri

A. Attach a line drawing showing the water flow through the facility. Indicate sources of intake water, operations contributing wastewater to the effluent and treatment units labeled to correspond to the more detailed descriptions in item B. Construct a water balance on the line drawing by showing average flows between intakes, operations, treatment units, public sewers and outfalls. If a water balance cannot by determined (e.g., for certain mining activities), provide a pictorial description of the nature and amount of any sources of water and any collection or treatment measures.

B. For each outfall, provide a description of 1. All operations contributing wastewater to the effluent, including process wastewater, sanitary wastewater, cooling water and storm water runoff. 2. The average flow contributed by each operation. 3. The treatment received by the wastewater. Continue on additional sheets if necessary.

1. OUTFALL NO.	2. OPERATION(S) CONTRIBUTING FLOW		3. TREATMENT	
(LIST)	A. OPERATION (LIST)	B. AVERAGE FLOW (INCLUDE UNITS) (MAXIMUM FLOW)	A. DESCRIPTION	B. LIST CODES FROM TABLE A
001	Non-contact cooling water	44 MGD (Average)	Screening	1-T
002*	Boiler Blowdown and Flush	0.034 MGD (Average)	Settling	1-U
	Building Roof Area Runoff	2.63 MGY (precipitation dependent)	Settling	1-U
006	Storm Water Runoff	5.25 MGY (precipitation dependent)	None	XX
007**	Coal Pile Runoff	6.30 MGY (precipitation dependent)	Settling	1-U
003***	Boiler Blowdown and Flush	0.034 MGD (Average)	Settling	1-U
	Building Roof Area Runoff	2.63 MGY (precipitation dependent)	Settling	1-U
Notes:				
* - There is no normal flow from Outfall 002. The former ash pond covers approximately 24 acres and surface evaporation keeps the pond at a low water level. A discharge would only occur during a flood event. All process water directed to the former ash pond will be rerouted to Outfall 003 in Fall 2014. Outfall 002 will be removed once Outfall 003 is operational.				
** - There is no normal flow from Outfall 007. Surface evaporation keeps the lagoon at a low water level. A discharge would only occur during a flood event.				
*** - Outfall 003 is a proposed outfall. A new retention pond will be constructed onsite in 2014. Water from the new outfall will be rerouted in 2014.				
**** - Fluids from steam tube cleaning operations have been containerized, disposed of appropriately, and have not been discharged through any of the outfalls at the Facility.				

2.40 CONTINUED

C. EXCEPT FOR STORM RUNOFF, LEAKS OR SPILLS, ARE ANY OF THE DISCHARGES DESCRIBED IN ITEMS A OR B INTERMITTENT OR SEASONAL?

☑ **YES** *(COMPLETE THE FOLLOWING TABLE)* ☐ **NO** *(GO TO SECTION 2.50)*

1. OUTFALL NUMBER *(list)*	2. OPERATION(S) CONTRIBUTING FLOW *(list)*	3. FREQUENCY		4. FLOW				C. DURATION *(in days)*
				A. FLOW RATE *(in mgd)*		B. TOTAL VOLUME (specify with units)		
		A. DAYS PER WEEK *(specify average)*	B. MONTHS PER YEAR *(specify average)*	1. LONG TERM AVERAGE	2. MAXIMUM DAILY	4. LONG TERM DAILY	3. MAXIMUM AVERAGE	
002 007	Boiler blowdown and flush, plant roof drains Coal pile runoff	There has been no recorded flow from Outfall 002 or Outfall 007 for several years prior to 2013.						

2.50 MAXIMUM PRODUCTION

A. DOES AN EFFLUENT GUIDELINE LIMITATION PROMULGATED BY EPA UNDER SECTION 304 OF THE CLEAN WATER ACT APPLY TO YOUR FACILITY?

☑ **YES** *(COMPLETE B.)* ☐ **NO** *(GO TO SECTION 2.60)*

B. ARE THE LIMITATIONS IN THE APPLICABLE EFFLUENT GUIDELINES EXPRESSED IN TERMS OF PRODUCTION (OF OTHER MEASURE OF OPERATION)?

☐ **YES** *(COMPLETE c.)* ☑ **NO** *(GO TO SECTION 2.60)*

C. IF YOU ANSWERED "YES" TO B. LIST THE QUANTITY THAT REPRESENTS AN ACTUAL MEASUREMENT OF YOUR MAXIMUM LEVEL OF PRODUCTION, EXPRESSED IN THE TERMS AND UNITS USED IN THE APPLICABLE EFFLUENT GUIDELINE AND INDICATE THE AFFECTED OUTFALLS.

1. MAXIMUM QUANTITY			2. AFFECTED OUTFALLS *(list outfall numbers)*
A. QUANTITY PER DAY	B. UNITS OF MEASURE	C. OPERATION, PRODUCT, MATERIAL, ETC. *(specify)*	

2.60 IMPROVEMENTS

A. ARE YOU NOW REQUIRED BY ANY FEDERAL, STATE OR LOCAL AUTHORITY TO MEET, ANY IMPLEMENTATION SCHEDULE FOR THE CONSTRUCTION, UPGRADING OR OPERATION OF WASTEWATER TREATMENT EQUIPMENT OR PRACTICES OR ANY OTHER ENVIRONMENTAL PROGRAMS THAT MAY AFFECT THE DISCHARGES DESCRIBED IN THIS APPLICATION? THIS INCLUDES, BUT IS NOT LIMITED TO, PERMIT CONDITIONS, ADMINISTRATIVE OR ENFORCEMENT ORDERS, ENFORCEMENT COMPLIANCE SCHEDULE LETTERS, STIPULATIONS, COURT ORDERS AND GRANT OR LOAN CONDITIONS.

☐ **YES** *(COMPLETE THE FOLLOWING TABLE)* ☑ **NO** *(GO TO 3.00)*

1. IDENTIFICATION OF CONDITION AGREEMENT, ETC.	2. AFFECTED OUTFALLS		3. BRIEF DESCRIPTION OF PROJECT	4. FINAL COMPLIANCE DATE	
				A. REQUIRED	B. PROJECTED

B. OPTIONAL: YOU MAY ATTACH ADDITIONAL SHEETS DESCRIBING ANY ADDITIONAL WATER POLLUTION CONTROL PROGRAMS *(OR OTHER ENVIRONMENTAL PROJECTS WHICH MAY AFFECT YOUR DISCHARGES)* YOU NOW HAVE UNDER WAY OR WHICH YOU PLAN. INDICATE WHETHER EACH PROGRAM IS NOW UNDER WAY OR PLANNED, AND INDICATE YOUR ACTUAL OR PLANNED SCHEDULES FOR CONSTRUCTION.

☐ **MARK "X" IF DESCRIPTION OF ADDITIONAL CONTROL PROGRAMS IS ATTACHED.**

3.00 INTAKE AND EFFLUENT CHARACTERISTICS

A. & B. SEE INSTRUCTIONS BEFORE PROCEEDING – COMPLETE ONE TABLE FOR EACH OUTFALL – ANNOTATE THE OUTFALL NUMBER IN THE SPACE PROVIDED.
NOTE: TABLE 1 IS INCLUDED ON SEPARATE SHEETS NUMBERED FROM PAGE 6 TO PAGE 7.

C. USE THE SPACE BELOW TO LIST ANY OF THE POLLUTANTS LISTED IN PART B OF THE INSTRUCTIONS, WHICH YOU KNOW OR HAVE REASON TO BELIEVE IS DISCHARGED OR MAY BE DISCHARGED FROM ANY OUTFALL. FOR EVERY POLLUTANT YOU LIST, BRIEFLY DESCRIBE THE REASONS YOU BELIEVE IT TO BE PRESENT AND REPORT ANY ANALYTICAL DATA IN YOUR POSSESSION.

1. POLLUTANT	2. SOURCE	1. POLLUTANT	2. SOURCE
None			

3.10 BIOLOGICAL TOXICITY TESTING DATA

DO YOU HAVE ANY KNOWLEDGE OR REASON TO BELIEVE THAT ANY BIOLOGICAL TEST FOR ACUTE OR CHRONIC TOXICITY HAS BEEN MADE ON ANY OF YOUR DISCHARGES OR ON RECEIVING WATER IN RELATION TO YOUR DISCHARGE WITHIN THE LAST THREE YEARS?

☐ YES (IDENTIFY THE TEST(S) AND DESCRIBE THEIR PURPOSES BELOW.) ☑ NO (GO TO 3.20)

3.20 CONTRACT ANALYSIS INFORMATION

WERE ANY OF THE ANALYSES REPORTED PERFORMED BY A CONTRACT LABORATORY OR CONSULTING FIRM?

☑ **YES** *(LIST THE NAME, ADDRESS AND TELEPHONE NUMBER OF AND POLLUTANTS ANALYZED BY EACH SUCH LABORATORY OR FIRM BELOW.)* ☐ **NO** *(GO TO 3.30)*

A. NAME	B. ADDRESS	C. TELEPHONE *(area code and number)*	D. POLLUTANTS ANALYZED *(list)*
City of Independence Water Pollution Control Department Environmental Compliance Testing Laboratory	9600 Norledge Independence, MO 64053	816-325-7711	COD, Oil & Grease
Independence Power & Light Environmental Chemist Testing Laboratory	21500 East Truman Road Independence, MO 64056	816-325-6286	pH, Settleable Solids

3.30 CERTIFICATION

I CERTIFY UNDER PENALTY OF LAW THAT I HAVE PERSONALLY EXAMINED AND AM FAMILIAR WITH THE INFORMATION SUBMITTED IN THIS APPLICATION AND ALL ATTACHMENTS AND THAT, BASED ON MY INQUIRY OF THOSE INDIVIDUALS IMMEDIATELY RESPONSIBLE FOR OBTAINING THE INFORMATION, I BELIEVE THAT THE INFORMATION IS TRUE, ACCURATE AND COMPLETE. I AM AWARE THAT THERE ARE SIGNIFICANT PENALTIES FOR SUBMITTING FALSE INFORMATION, INCLUDING THE POSSIBILITY OF FINE AND IMPRISONMENT.

NAME AND OFFICIAL TITLE (TYPE OR PRINT)	TELEPHONE NUMBER WITH AREA CODE
E. Leon Daggett, Director	(816) 325-7437
SIGNATURE (SEE INSTRUCTIONS) E. Leon Daggett	DATE SIGNED 8/2/2013

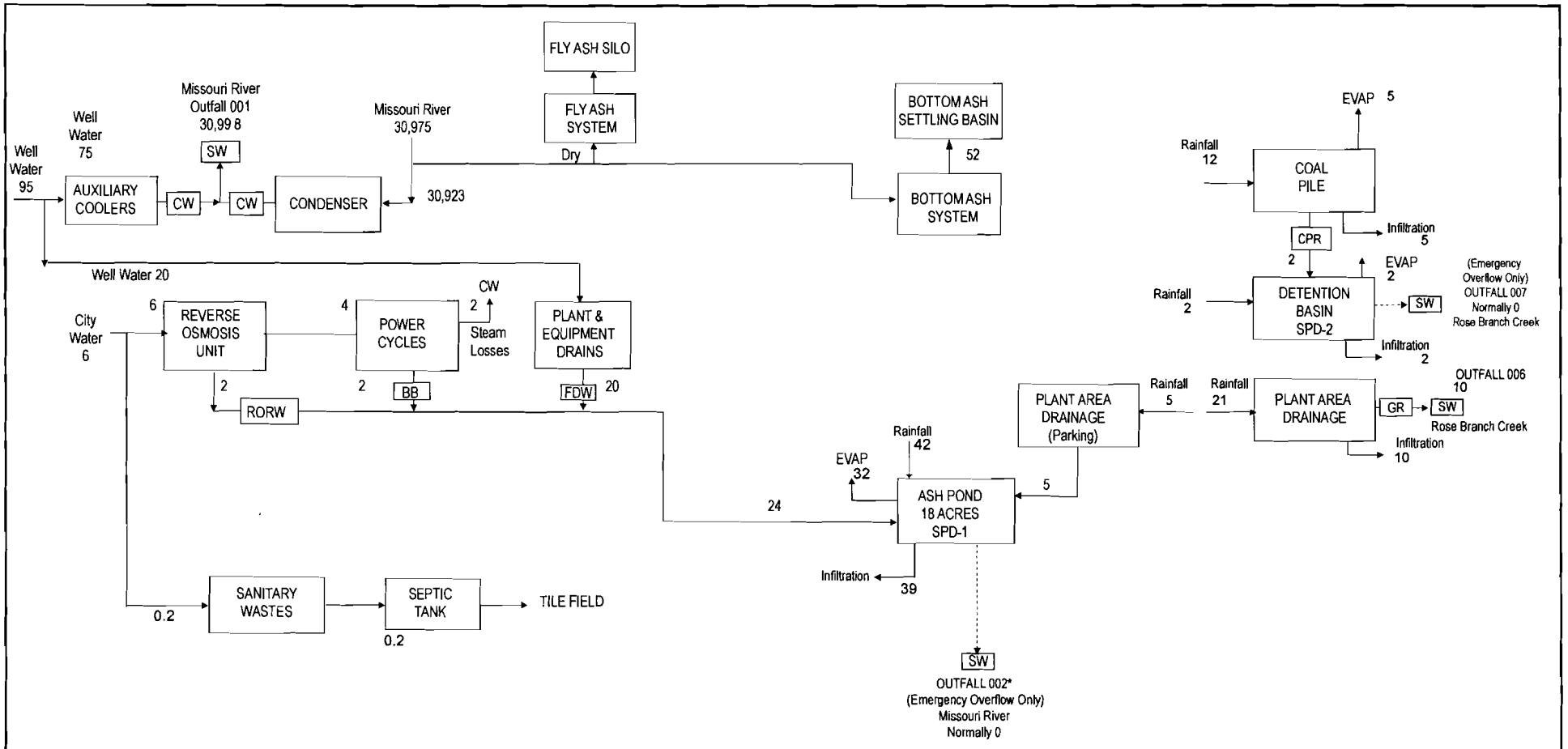

NOTES:
1. Flows shown are annual average including shutdown periods.
2. All flows are in gallons per minute.

Schematic of Water Flow
Missouri City Power Station
Missouri City, Missouri

City of Independence

POWER & LIGHT DEPARTMENT
21500 E. TRUMAN ROAD • P.O. BOX 1019 • INDEPENDENCE, MISSOURI 64051-0519
www.ci.independence.mo.us
(816) 325-7500
FAX (816) 325-7470

August 2, 2013

RECEIVED
AUG - 5 2013
WATER PROTECTION PROGRAM

Missouri Department of Natural Resources
Water Protection Permits
Attn: Amanda Sappington
P.O. Box 176
Jefferson City, MO 65102

RE: Operating Permit renewal for Missouri City Power Station (Permit MO-0004588)

Dear Ms. Sappington,

The City of Independence, Independence Power and Light Department is submitting the enclosed permit renewal application for the Missouri City Power Station. This submittal satisfies the 180 day, prior to permit expiration, application submittal requirement. The existing permit expiration date is February 5, 2014.

Additionally, the Missouri City Power Station has a New Settling Pond construction permit application that is currently being reviewed by Mr. Scott Honig in the Kansas City Regional Office. The construction permit includes the addition of a new settling pond outfall (outfall 003). This new outfall is mentioned in the operating permit application.

Finally, no permit application fee is included with this permit renewal application. It is our understanding that the permit renewal fee will be requested by the Department after reviewing the application.

If you have any questions or concerns, please do not hesitate to call me at 816.325.6286.

Sincerely,

Joshua Buehre
Environmental Program Specialist
Independence Power & Light

Attachments