BRIDGETON LANDFILL

NORTH QUARRY ACTION PLAN

Bridgeton Landfill, LLC
13570 St. Charles Rock Rd.
Bridgeton, MO 63044

Technical Contributors:

Civil & Environmental Consultants, Inc.
4848 Park 370, Suite F
Hazelwood, MO 63042

Cornerstone Environmental Group, LLC
400 Quadrangle Drive, Unit E
Bolingbrook, IL 60440

Feezor Engineering, Inc.
406 East Walnut
Chatham, IL 62692

P.J. Carey & Associates, P.C.
5878 Valine Way
Sugar Hill, GA 30518

Note: Individual construction plans prepared by these technical contributors have been signed and sealed by a professional engineer licensed in the State of Missouri where required.

October 7, 2013

Revised November 12, 2013

North Quarry Action Plan
Bridgeton Landfill
Revised November 12, 2013

The narrative, Figures 1-3, Appendix B and Appendix D of this North Quarry Action Plan were prepared by Civil & Environmental Consultants under the responsible charge, supervision, and direction of the undersigned.

Michael R. Beaudoin, P.E. (primary registration Michigan)
Principal

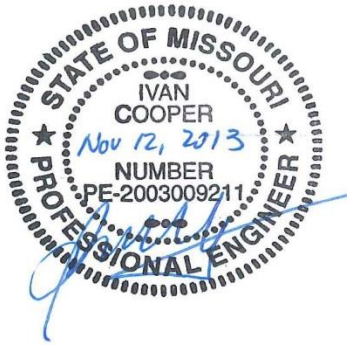

Ivan A. Cooper, P.E., BCEE
Principal
Professional Engineer, Licensed in the State of Missouri

TABLE OF CONTENTS

1.0 INTRODUCTION 1
1.1 SITE SETTING 1
1.2 EXISTING SUBSURFACE SMOLDERING EVENT (SSE) 1
1.3 REQUIREMENTS OF AGREED ORDER 1
1.4 PROPOSED ALTERNATIVE – NORTH QUARRY ACTION PLAN 2
2.0 ISOLATION, CONTAINMENT, AND MONITORING OF THE SSE 3
2.1 ISOLATION FEATURES 3
2.1.1 Existing Isolation Features 3
2.1.2 Proposed Additional Isolation Feature 3
2.2 CONTAINMENT FEATURES 4
2.2.1 Existing Containment Features 4
2.2.2 Proposed Additional Containment Features 4
2.3 MONITORING FEATURES 5
2.3.1 South Quarry Monitoring 5
2.3.2 North Quarry Monitoring 5
3.0 INSTALLATION AND CONSTRUCTION SCHEDULE 7

FIGURES

Figure 1 Facility Map
Figure 2 Existing Conditions
Figure 3 Schematic Plan of Actions

APPENDICES

Appendix A – Construction Plan for North Quarry Temporary Cap and Enhanced Gas Management System
Appendix B – DRAFT Bird Mitigation Plan
Appendix C – Installation Plan for New Temperature Monitoring Probes (TMPs)
Appendix D – Rate of SSE Movement

1.0 INTRODUCTION

1.1 SITE SETTING

Bridgeton Landfill LLC (Bridgeton Landfill) is located on a 214-acre parcel, of which approximately 52 acres has been permitted for municipal solid waste disposal under the conditions of Permit #118912. In accordance with the permit, waste was placed in former limestone quarries which were reportedly about 240 feet deep. The landfill ceased accepting waste at the end of 2004.

The permitted landfill is generally described in two sections which refer directionally to the landfilled areas: the North Quarry, and the South Quarry. The remainder of the site includes several inactive landfill units, including the West Lake Landfill Operational Unit 1, where soils contaminated with radiologically-impacted materials were deposited in 1973. See Figure 1 for a general overview of the facility.

The North and South Quarry areas are contiguous and waste material that was placed therein is connected by a relatively thin "neck" area which is about 300 feet wide at the top and narrows as it approaches the bottom at a depth of about 250 feet. A 3-D rendering illustrating the relationship of these two areas is presented on Figure 2. West Lake OU-1 Area 1 abuts the North Quarry area but not any of the other landfill areas. The depth of the waste material shallows significantly moving from the South Quarry toward West Lake OU-1 Area 1 as seen on the cross section on Figure 2.

1.2 EXISTING SUBSURFACE SMOLDERING EVENT (SSE)

Bridgeton Landfill has been addressing a subsurface reaction that is occurring in the South Quarry portion of the landfill and which has resulted in elevated temperatures and accelerated reduction of the in-situ waste volume. The State of Missouri (State) has defined this reaction as a "subsurface smoldering event" (SSE), and that term shall be adopted in this document to refer to the subsurface reaction. Efforts have focused on establishing the necessary infrastructure to isolate, contain, and monitor the SSE with a particular emphasis on preventing the SSE from entering radiologically-impacted material in West Lake OU-1 Area 1.

For these efforts, the facility has implemented extensive modifications to the South Quarry gas collection and control system (GCCS) and leachate collection system, and has installed an additional capping system over the South Quarry. See Figure 2 for locations of these features.

1.3 REQUIREMENTS OF AGREED ORDER

On May 13, 2013, Bridgeton Landfill entered into an Agreed Order with the State which contains a number of requirements relative to the SSE including preparation of materials and plans regarding "contingent" actions to be taken upon "triggering" based upon monitoring results. The proposed contingent actions were intended to provide isolation and containment of the SSE. Submittals were made regarding a "North Quarry Contingency Plan," Parts 1 and 2 in June, July, and August 2013 as required by the Agreed Order and in response to MDNR comments.

Through series of discussions and written comments, Missouri Department of Natural Resources ("MDNR") issued its approval for a monitoring approach and set of trigger criteria and provided comments on any remaining revisions to the technical components of work plans. While the current action plan, as discussed below, will move forward even in advance of triggering criteria, the future plan will continue to utilize the MDNR directed monitoring approach and technical comments on work plans. These will just no longer be the basis for contingencies and the plan components have been updated to reflect that.

1.4 PROPOSED ALTERNATIVE – NORTH QUARRY ACTION PLAN

In September 2013, Bridgeton Landfill proposed to install proactively and without trigger the final structural elements of the NQCP that provide isolation and containment of the SSE. This was an alternative approach to the Contingency Plans required by the Agreed Order, which required the installation of these structural elements only after trigger criteria were detected. The alternative approach was verbally accepted by the MDNR and the EPA, and announced publically on Friday, September 20, 2013. The resulting "North Quarry Action Plan" (NQAP) commits Bridgeton Landfill to a series of efforts that will provide positive isolation and containment of the subsurface smoldering event (SSE) within the Bridgeton Landfill. Proactive performance of these actions eliminates trigger criteria, triggering events, and contingent actions written into the now-defunct North Quarry Contingency Plan. Instead, the following efforts will be undertaken by Bridgeton Landfill:

1. Enhancement of the gas collection and control system (GCCS) in the North Quarry in a manner that would allow the system to accommodate and perform in the conditions that would exist if an SSE were present;
2. Completion of a synthetic (EVOH) cap over the North Quarry area to provide environmental containment and odor control should an SSE be present in the North Quarry; and
3. Pre-design investigation; design and construction of an Isolation Barrier that separates combustible material in the North Quarry from radiologically-impacted material (RIM) in the West Lake OU-1 Area 1 unit, under the direction of the United States Environmental Protection Agency ("U.S. EPA"), with input from the State.

In addition, Bridgeton Landfill is prepared to proceed with installation of three new temperature monitoring probes (TMPs) as requested by the MDNR in a letter dated August 27, 2013, pending final confirmation by MDNR of location and continuing need in light of the revised approach.

2.0 ISOLATION, CONTAINMENT, AND MONITORING OF THE SSE

The main strategies for responding to an SSE include:

- Isolation – Physical separation or conditional separation of the waste that is experiencing the SSE from other potentially-impacted areas;
- Containment – Actions that are designed to collect and prevent the negative manifestations of the SSE from impacting the environment; and
- Monitoring – Observation of the SSE to determine its condition and assure that the isolation and containment features continue to be protective.

At the present time, Bridgeton Landfill has implemented and considered several isolation, monitoring, and containment features as described in the following sections.

2.1 ISOLATION FEATURES

Bridgeton Landfill has assessed both existing and previously-evaluated isolation features in order to select the elements best suited for inclusion in the North Quarry Action Plan.

2.1.1 Existing Isolation Features

Heat removal can be used to isolate pyrolysis associated with an SSE. If the amount of heat removed from a particular portion of the landfill can balance the heat added by local subsurface reaction, the advancement of the SSE can be curtailed and effectively isolated.

At the Bridgeton Landfill, special gas extraction wells, known as Gas Interceptor Wells (GIWs) have been installed specifically to stop movement of heat and to disrupt the subsurface migration of SSE-impacted gas. The GIWs are positioned in a manner that allow for removal of gas heat and pressure that is exerted laterally in an effort to prevent the SSE from migrating into the North Quarry. See Figure 2, for location and details of the existing GIWs. As-built drawings of the existing GIWs are maintained on site.

The GIWs are constructed with high temperature-resistant materials as they are expected to draw significant heat energy. Monitoring of this system's operation is part of ongoing efforts and results.

2.1.2 Proposed Additional Isolation Feature

An additional isolation feature is proposed to prevent the possibility of the SSE from entering into the radiologically-impacted material (RIM) in the OU-1 area. A physical barrier, consisting of a complete, excavated break, or "isolation barrier" will be created by excavating completely through waste materials resulting in a full, structurally-stable permanent feature which isolates the SSE from the RIM.

The northern limit of the North Quarry was selected as an isolation barrier location because the location would allow construction of a barrier tied into natural rock, soil material, or inert fill material at a relatively shallow depth. This reduces construction time and minimizes waste excavation, thereby reducing inconvenience to surrounding community which may result from waste disturbance, and which also best addresses requirements that activities on site not create a bird attractant, which could be a hazard to the nearby Lambert St. Louis International Airport.

In order to determine the best location of an Isolation Barrier, Bridgeton Landfill will be performing subsurface investigations to determine the existing conditions and extent of RIM. The U.S. EPA will take the lead on the Isolation Barrier investigations, design, and construction while the MDNR will work closely with the U.S. EPA and Bridgeton Landfill throughout that process. A preliminary approximate location for the Isolation Barrier is provided on Figure 3 of this NQAP.

2.2 CONTAINMENT FEATURES

2.2.1 Existing Containment Features

Bridgeton Landfill has constructed a number of containment features directed at preventing the negative manifestations of the SSE from impacting the environment. These features are shown on Figure 2 and on as-built drawings maintained on site and include:

- Expanded and enhanced gas collection and control systems (GCCS) in the South Quarry area including additional gas extraction wells and gas destruction devices (flares), to allow for a greater removal of gas and pressure that is exerted upward by the SSE and enhance the preferential upward motion of the steam such that less pressure is exerted laterally; and
- Synthetic capping over the South Quarry area to prevent fugitive emissions from the landfill cover and help improve operation of gas and liquids collection systems.

Successful use of these containment measures at other facilities experiencing subsurface reactions validates continued employment at the Bridgeton Landfill.

2.2.2 Proposed Additional Containment Features

Although there is no evidence or symptoms of an SSE in the North Quarry at this time, Bridgeton Landfill has elected to provide the same containment features that currently exist in the South Quarry area throughout the North Quarry area. This work would be performed in two phases, with Phase 1 covering the North Quarry to the limit of the future Isolation Barrier, and Phase 2 providing coverage over the constructed Isolation Barrier. A schematic illustrating these additional containment features is provided on Figure 3.

Detailed plans for this proposed work are contained in Appendix A of this NQAP. Installation and construction activities for these proposed containment features will be performed using the

DRAFT Bird Mitigation Plan which is included as Appendix B of this NQAP and which is in the review process with officials of Lambert-St. Louis International Airport.

2.3 MONITORING FEATURES

2.3.1 South Quarry Monitoring

Bridgeton Landfill utilizes numerous features to observe, monitor, and to determine the effects, location, and movement of the SSE in the South Quarry area:

- Monitoring of the gas temperature and composition at gas extraction wellheads (primarily the Gas Extraction Well or GEW series);
- Measurement of in situ waste temperature with buried thermocouples (known as Temperature Monitoring Probes or TMPs); and
- Mapping of landfill surface settlement.

Current frequencies of monitoring and reporting requirements are contained in the Agreed Order. The parameters and frequencies of collection may be reduced as the actions in this NQAP are implemented and as agreed by the MDNR.

Existing TMPs are located in the South Quarry area and are experiencing damage due to settlement of the waste mass which can pull the TMPs apart or lead to abrasion or nicking of wires rendering results invalid or questionable. Since the TMP data is no longer needed as a monitoring feature for contingent actions, these units will not be replaced or repaired as part of this NQAP if a subsurface compromise is detected or suspected.

2.3.2 North Quarry Monitoring

The North Quarry area is not currently experiencing an SSE, and is being proactively provided with isolation and containment features as described in this NQAP. Therefore, monitoring can be focused on parameters that provide near-term indication of the absence/presence, and/or location of the SSE relative to the North Quarry and actions taken therein.

As such, Bridgeton Landfill will continue with monthly NSPS monitoring of the existing gas extractions wells and any new or replacement gas extraction wells installed in the North Quarry area. In addition, if any North Quarry gas extraction well exhibits wellhead temperature greater than 145° F, monthly CO laboratory testing will be performed on that gas well until the wellhead temperature drops below 140° F.

However, Bridgeton Landfill is prepared to proceed with installation of three new temperature monitoring probes (TMPs) as requested by the MDNR. Locations for the three new probes are currently being discussed with MDNR but tentative locations are presented on Figure 3 of this NQAP and detailed in Appendix C. While no longer needed for the basis of any contingent responses, these were requested by MDNR to supplement the existing TMPs, and the North

Quarry locations were selected to avoid disturbance of the existing EVOH capping system on the South Quarry.

3.0 INSTALLATION AND CONSTRUCTION SCHEDULE

Appendix D contains a figure that shows the progression of a surface boundary line referred to as the "settlement front." The settlement front has been defined as the outward boundary of the rate of settlement of 1.35 feet over a one-month period. This rate of settlement has been selected so that the settlement front is near the estimated limits of volume-reduction mechanisms (i.e. pyrolysis) as shown on the illustration above. Bridgeton Landfill believes that the position of the settlement front is a good approximation of the location of the subsurface SSE and that the movement of the settlement front provides valuable information about the lateral progression or movement of the SSE.

Settlement data from August and September 2013 has become available since issuance of MDNR's comment letter. The settlement data confirms that northward movement of the settlement front has completely stopped, and even reversed in the past two months. By reaching back to January of 2013, it is possible to calculate a hypothetical forward average movement rate of 0.1 feet per day northward (see Appendix D of this NQAP). .

Bridgeton Landfill has elected to undertake the North Quarry actions in an expeditious manner despite the apparent cessation of northern movement of the settlement front. The proposed schedule is provided below:

Item	**Proposed Schedule**
Install New TMPs (TMP-16, -17, and -18)	Complete within 60 days of agreement on location
Install Enhanced GCCS – Phase 1	October 29, 2013 – December 23, 2013
***Install EVOH Cap – Phase* 1**	
• Toe Drain and Sumps	November 1, 2013 – December 23, 2013
• EVOH Cap	February 15, 2014 – May 30, 2014
Isolation Barrier Activities	Per Agreements with U.S. EPA
• GCPT Investigation	
• Phase 2 Soil Borings	
• Isolation Barrier	
• EVOH Cap – Phase 2	

FIGURES

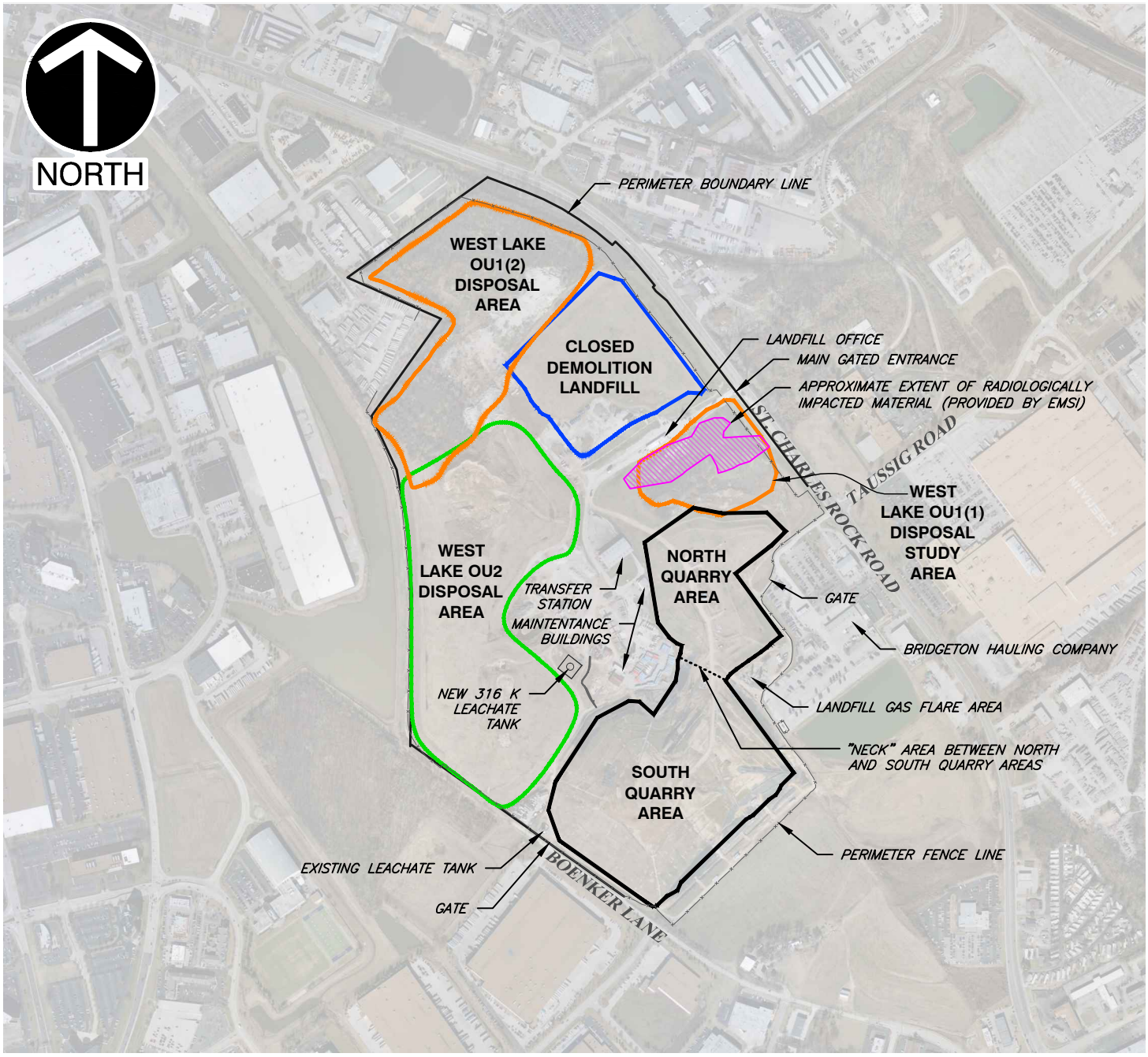

REFERENCE

1. AERIAL IMAGERY PROVIDED BY EAST WEST GATEWAY COORDINATING COUNCIL OF MISSOURI AND ILLINOIS, COLLECTED IN LATE FEBRUARY AND EARLY MARCH OF 2012.
2. BOUNDARY INFORMATION PROVIDED BY SHERBUT-CARSON & ASSOCIATES, P.C. DRAWING NAME-1111 LEASE EXHIBIT.DWG RECEIVED ON 03/04/2013

SCALE IN FEET

0 1000 2000

BRIDGETON LANDFILL, LLC
13570 ST. CHARLES ROCK ROAD
BRIDGETON, MISSOURI

FACILITY MAP

DRAWN BY:	MSP	CHECKED BY:	MRB	APPROVED BY:	IAC	FIGURE NO.:	1
DATE:	OCT. 2013	DWG SCALE:	1"=1000'	PROJECT NO:	131-178.0001		

P:\2013\130-484\-CADD\Dwg\SolidWaste\131178-Action_Plan-Figure_1.dwg{FACILITY_MAP} LS:(10/2/2013 - mpeake) - LP: 10/2/2013 11:01 AM

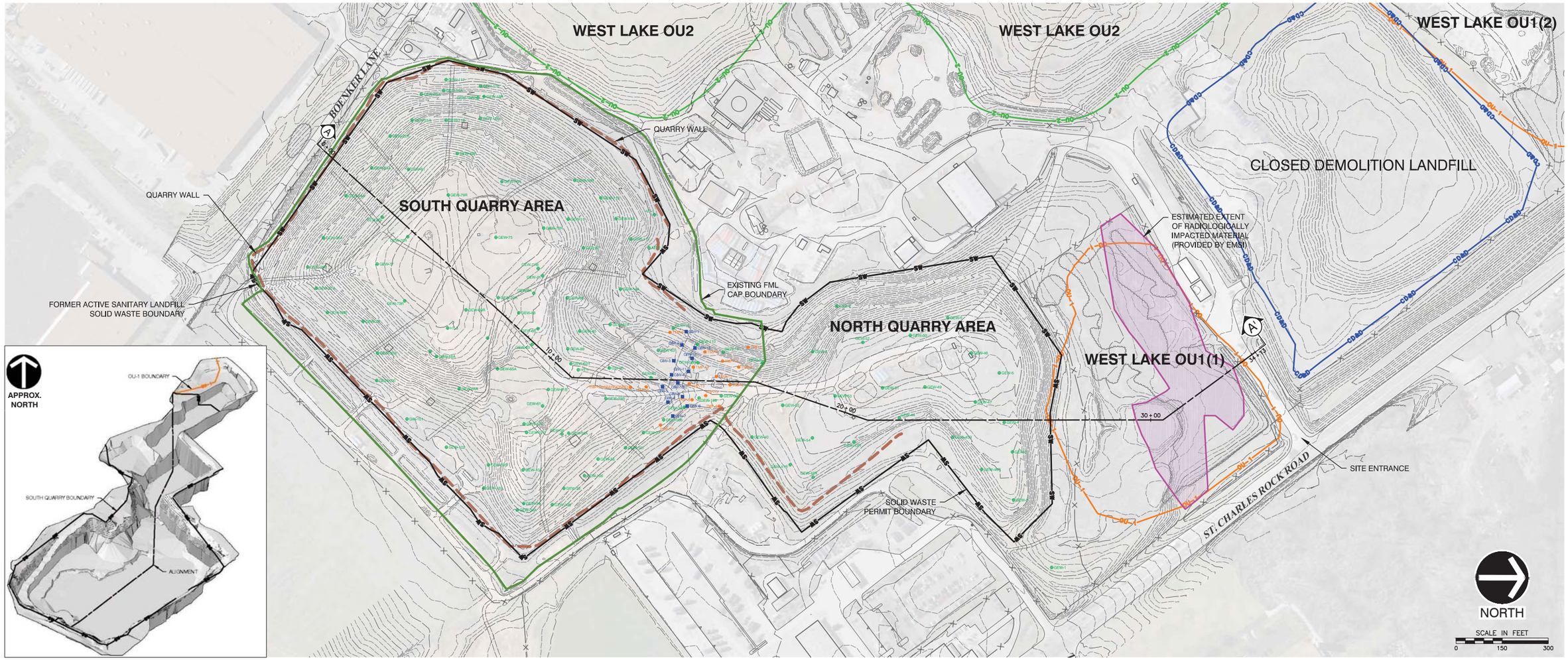

LEGEND

SW	EXISTING SOLID WASTE PERMIT BOUNDARY
OU-1	EXISTING OU1 STUDY AREA BOUNDARY
OU-2	EXISTING OU2 BOUNDARY
CD&D	EXISTING CLOSED DEMOLITION BOUNDARY
	EXISTING QUARRY HIGHWALL
	EXISTING FML CAP BOUNDARY
GEW-81	EXISTING LFG EXTRACTION WELL (GEW)
TMP-6	EXISTING TEMPERATURE MONITORING PROBE (TMP)
GIW-10	EXISTING GAS INTERCEPTOR WELL (GIW)

REFERENCE

1. TOPOGRAPHIC INFORMATION BASED UPON BRIDGETON LANDFILL–DTM.DWG PROVIDED BY COOPER AERIAL SURVEYS CO., DATED FEB. 2013. PRELIMINARY SURVEY INFORMATION OF WELLS AND PROBES PROVIDED BY WEAVER BOOS CONSULTANTS.
2. AERIAL IMAGERY PROVIDED BY EAST WEST GATEWAY COORDINATING COUNCIL OF MISSOURI AND ILLINOIS, COLLECTED IN LATE FEBRUARY AND EARLY MARCH OF 2012.

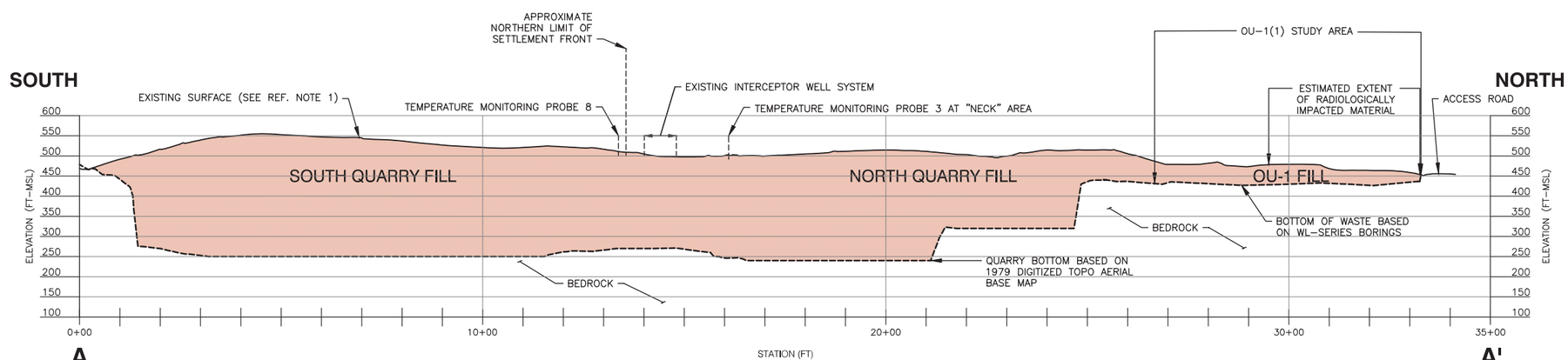

CROSS SECTION A-A'

BRIDGETON LANDFILL - EXISTING CONDITIONS

DRAWN BY:	MSP	CHECKED BY:	MRB	APPROVED BY:	IAC	FIGURE NO.:
DATE:	NOV. 2013	DWG SCALE:	1"=150'	PROJECT NO:	131-178.0001	2

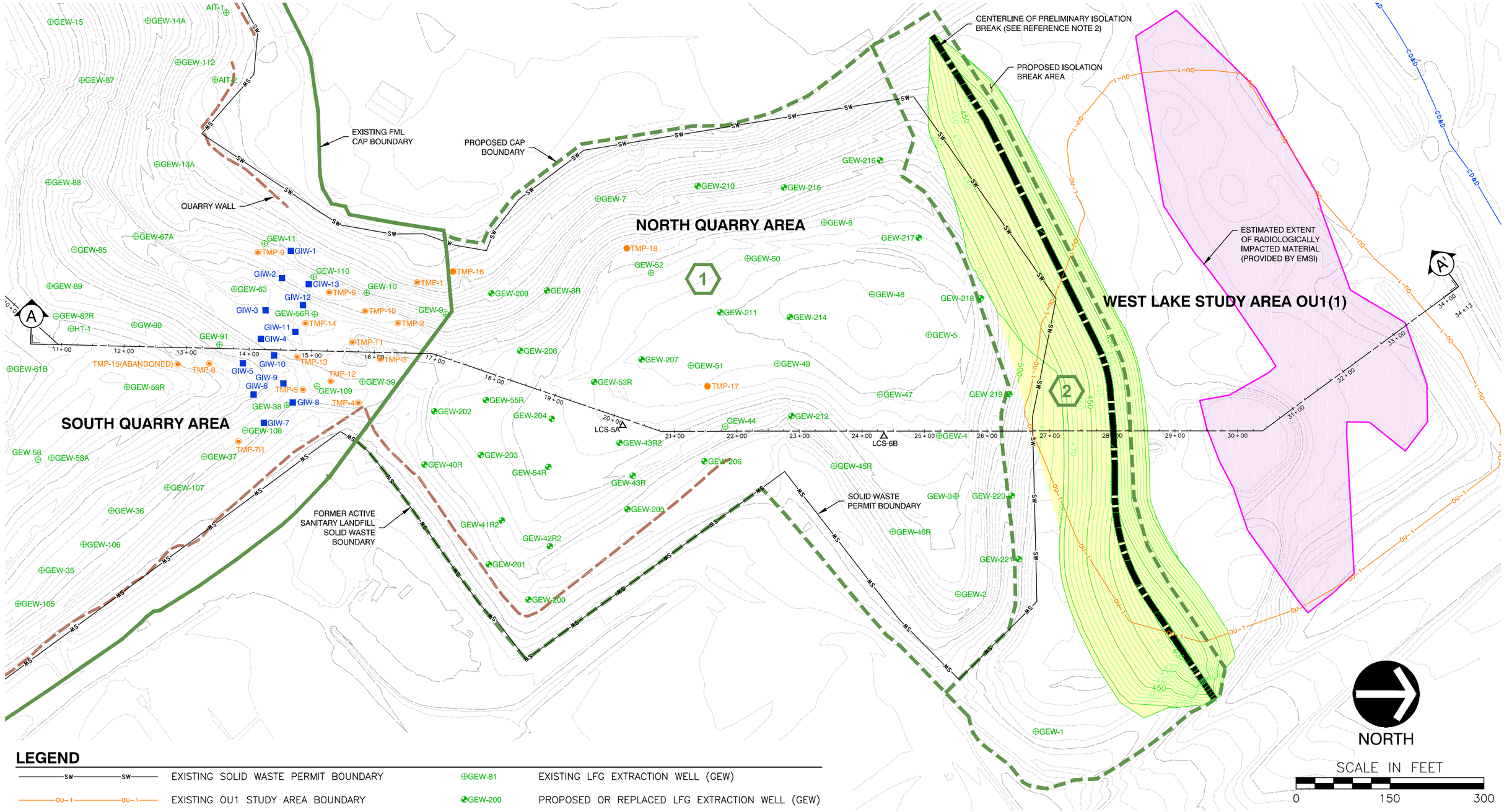

LEGEND

SW	EXISTING SOLID WASTE PERMIT BOUNDARY	GEW-81	EXISTING LFG EXTRACTION WELL (GEW)
OU-1	EXISTING OU1 STUDY AREA BOUNDARY	GEW-200	PROPOSED OR REPLACED LFG EXTRACTION WELL (GEW)
CD&D	EXISTING CLOSED DEMOLITION BOUNDARY	TMP-6	EXISTING TEMPERATURE MONITORING PROBE (TMP)
	EXISTING QUARRY HIGHWALL	TMP-16	PROPOSED TEMPERATURE MONITORING PROBE (TMP)
	EXISTING FML CAP BOUDARY	GIW-10	EXISTING GAS INTERCEPTOR WELL (GIW)
	PROPOSED CAP PHASE BOUNDARY	LCS-6B	EXISTING LEACHATE COLLECTION SUMP (LCS-5 AND 6)
1	PROPOSED CAP PHASE DESIGNATION		

REFERENCE

1. TOPOGRAPHIC INFORMATION BASED UPON BRIDGETON LANDFILL– DTM.DWG PROVIDED BY COOPER AERIAL SURVEYS CO., DATED FEB. 2013. PRELIMINARY SURVEY INFORMATION OF WELLS AND PROBES PROVIDED BY WEAVER BOOS CONSULTANTS.
2. DESIGN OF THE NORTH QUARRY EVOH CAP AND ENHANCED GCCS, AS WELL AS ADDITIONAL INFORMATION ON PROPOSED ISOLATION BREAK IS PROVIDED IN APPENDIX A OF THIS PLAN.

SCHEMATIC PLAN OF ACTIONS

DRAWN BY:	MSP	CHECKED BY:	MRB	APPROVED BY:	IAC	FIGURE NO.:	3
DATE:	NOV. 2013	DWG SCALE:	1"=150'	PROJECT NO:	131-178.0001		

APPENDIX A

CONSTRUCTION PLAN FOR NORTH QUARRY TEMPORARY CAP AND ENHANCED GAS MANAGEMENT SYSTEM







EVOH Geomembrane Cap and Cap Integrity System Plan Narrative

North Quarry – Proposed Plan ~~Contingency Plan~~

Project 130520
July 2013
Revised October 2013
Revised November 2013

Prepared for:
Bridgeton Landfill, LLC
13570 St. Charles Rock Rd.
Bridgeton, Missouri 63044

CORNERSTONE
Environmental Group, LLC

39395 W. Twelve Mile Rd., Suite 103, Farmington Hills, MI 48331

Building lifetime relationships with our clients and employees.

EVOH GEOMEMBRANE CAP AND CAP INTEGRITY SYSTEM PLAN NARRATIVE

NORTH QUARRY – ~~CONTINGENCY~~ PROPOSED PLAN
BRIDGETON LANDFILL

Prepared for

Bridgeton Landfill, LLC
13570 St. Charles Rock Road
Bridgeton, Missouri 63044

July 2013
Revised October 2013
Revised November 2013

Prepared by

CORNERSTONE
Environmental Group, LLC
39395 W. Twelve Mile Rd. Suite 103
Farmington Hills, MI 48331

Project 130520

EVOH Geomembrane Cap and Cap Integrity System Plan Narrative
North Quarry - ~~Contingency~~ Proposed Plan
Bridgeton Landfill

The material and data in this report were prepared under the supervision and direction of the undersigned.

Cornerstone Environmental Group, LLC

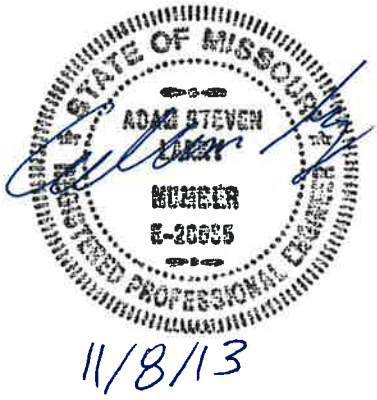

Bruce O. Schmucker
Client Manager

James Walker
Senior Client Manager

Adam Larky, P.E.
Client Manager

TABLE OF CONTENTS

1 INTRODUCTION AND BACKGROUND 1-1

1.1 INTRODUCTION AND BACKGROUND 1-1

2 KEY SYSTEM COMPONENTS 2-1

2.1 EVOH GEOMEMBRANE CAP 2-1
2.1.1 Tie-in with Existing Temporary Cap 2-2
2.1.2 Anchorage, Ballast & Light Duty Roads 2-2
2.1.3 Pipe Boots and Above Cap Piping 2-2
2.2 INTEGRITY SYSTEM 2-2
2.2.1 Collector Berms & Access Risers 2-3
2.2.2 Perimeter Collection Trench, and Collection Sumps 2-5
2.2.3 Above Cap Piping 2-5
2.3 COLLECTION SUMPS AND WASTEWATER FORCE MAIN 2-5
2.4 STORMWATER MANAGEMENT SYSTEM 2-6

3 INSTALLATION CONSIDERATIONS 3-1

3.1 PHASED INSTALLATION 3-1
3.2 SUBGRADE PREPARATIONS 3-2
3.3 WASTE MANAGEMENT 3-2

4 CONSTRUCTION QUALITY CONTROL AND SURVEYING 4-1

4.1 CONSTRUCTION QUALITY CONTROL & SURVEYING 4-1

5 OPERATIONS MAINTENANCE PLAN 5-1

5.1 OPERATIONS MAINTENANCE PLAN 5-1

LIMITATIONS 1

APPENDICES

APPENDIX A MANUFACTURER'S INFORMATION FOR EVOH GEOMEMBRANE

APPENDIX B CONSTRUCTION PLANS FOR THE NORTH QUARRY - EVOH GEOMEMBRANE CAP AND CAP INTEGRITY SYSTEM

APPENDIX C LANDFILL GAS COLLECTION AND CONTROL SYSTEM EVALUATION

APPENDIX D STORMWATER DESIGN REPORT

APPENDIX E TEMPORARY CAP AND CAP INTEGRITY SYSTEM CONSTRUCTION QUALITY ASSURANCE PLAN

1 INTRODUCTION AND BACKGROUND

1.1 Introduction and Background

Cornerstone Environmental Group, LLC (Cornerstone) has prepared this EVOH Geomembrane Cap and Cap Integrity System Plan for the North Quarry at the Bridgeton Landfill located in Bridgeton, Missouri. This plan will supplement existing systems in existence at this time for the conditions within this quarry of this landfill. This plan presents the systems that may be installed ~~sometime in the future (depending monitoring triggers described in the Contingency Plan),~~ including the following:

- EVOH Geomembrane Cap
- Liquid and Vapor Cap Integrity System to protect the temporary cap
- Enhanced stormwater management system
- Light-duty access roads

Each of these engineered components will be discussed in subsequent sections of this plan along with installation considerations, construction quality control, and operations and maintenance considerations. This plan has been prepared to address the State of Missouri's First Agreed Order of Preliminary Injunction (filed May 13, 2013), section 22.B.ii. for the North Quarry Proposed ~~Contingency~~ Plan.

2 KEY SYSTEM COMPONENTS

2.1 EVOH Geomembrane Cap

The geomembrane cap will consist of a green 60 mil Ethylene Vinyl Alcohol (EVOH) textured geomembrane underlain be a minimum 6 ounce per square yard (oz/sy) geotextile. EVOH geomembrane is manufactured as a "sandwich", the outside layers are composed of HDPE with an inner layer of semi-crystalline thermoplastic resin - EVOH manufacturer's information describing the EVOH geomembrane is included in Appendix A.

The proposed EVOH geomembrane cap will be installed over the North Quarry Unit as shown in Sheet 2. The EVOH geomembrane cap will be continuously seamed and continuously tied into the existing perimeter HDPE or EVOH geomembrane along the South Quarry boundary or anchored along the perimeter as presented in the Construction Plans for the North Quarry EVOH Geomembrane Cap and Cap Integrity System (engineering plans) included in Appendix B of this narrative. The total area proposed EVOH geomembrane cap area for the North Quarry is approximately 21.1 acres.

The geotextile underlying the EVOH geomembrane will be installed on a prepared subgrade as described on Sheets 3 through Sheet 4C. Cap integrity components discussed in this narrative will be constructed below and above the EVOH geomembrane cap to help preserve the temporary cap.

The EVOH geomembrane cap will be installed with panels orientated up and down slopes. The installation is planned to proceed in two relatively equal phases from the southeast to northwest parts of the North Quarry although this may be modified during construction due to field conditions.

Locations and details of liner edge termination are provided on Sheets 5 and 11 of the engineering plans.

The EVOH geomembrane cap will be installed by an experienced contractor and crews in accordance with the project specifications and QA/QC Plan included in Appendix E. The installation of the EVOH Geomembrane cap will be monitored in accordance with the QA/QC Plan by an experienced third-party engineering firm. A final certification report will be prepared under the direction of a certified engineer and will be submitted to MDNR.

Additional pertinent EVOH geomembrane cap information will be presented in the following subsections including:

2.1.1 Tie-in with existing South Quarry EVOH or HDPE cap

2.1.2 Anchorage, ballast and light duty roads

2.1.3 Pipe boots and above cap piping

Each will be discussed subsequently.

2.1.1 Tie-in with Existing Temporary Cap

The EVOH geomembrane cap is manufactured as a "sandwich", the outside layers being composed of HDPE; therefore, the proposed temporary cap can be welded to an existing HDPE or EVOH geomembrane with traditional welding equipment.

2.1.2 Anchorage, Ballast & Light Duty Roads

The perimeter edge of the new EVOH geomembrane cap will either be welded to the existing temporary HDPE or EVOH cap or anchored at the perimeter as shown on Sheets 5 and 11 of the engineering plans. Light duty access roads will be constructed above the EVOH geomembrane cap to provide ballast for the FML and allow for maintenance activities by light duty vehicles such as a one ton pickup truck or less. The roads will be 24-inch thick and constructed of a lower base layer comprised of 2 to 4 inch sized crushed limestone capped-off with a 2 to 3 inch thickness of Missouri Department of Transportation (MDOT) Type V Dense Graded Aggregate. Calculations were performed to ensure that the proposed light-duty access roads and header piping above the EVOH geomembrane cap would provide adequate ballast weight against wind uplift. The results of the calculations showed that the proposed design would prevent uplift from a 75 mph wind.

2.1.3 Pipe Boots and Above Cap Piping

Pipe penetrations of the EVOH geomembrane cap will be sealed utilizing a pipe boot. These boots, comprised of HDPE will be welded to the temporary cap and mechanically clamped to the riser pipe penetrating the membrane utilizing a worm-gear clamp or comparable securing mechanism. The position of the pipe boot relative to the riser pipe can be adjusted by monitoring personnel in the event that the local area experiences settlement. These boot seals can also be visually inspected during periodic monitoring of the cap for vapor emissions.

2.2 Integrity System

The intent of the cap integrity system is to provide a means of conveying any gas or liquid that may develop beneath the EVOH geomembrane cap to a dedicated perimeter

collection system. The relatively low-permeability of this cap component, compared to the accompanying soils, provides a barrier to liquid and gas movement and requires removal mechanisms below this geosynthetic cap component to insure its integrity.

The existing landfill gas (LFG) management components (as shown on Sheet 1A of the engineering drawings), including extraction wells, and extraction piping will be incorporated into the cap integrity system. Those components that are currently installed below grade will be maintained in this relative position, with existing access points penetrating the new temporary cap and secured to the FML via pipe boot seals. Additional or supplemental LFG management components will be installed above the EVOH geomembrane cap and connected to the existing infrastructure by means of welded, flanged or flexible connectors as appropriate for each connection point.

A discussion of the major integrity system components is included the following subsections:

2.2.1 Collector berms and access risers

2.2.2 Perimeter collection trench and collection sumps

2.2.3 Above cap piping

An evaluation of the gas collection and control system (GCCS) and proposed modifications to the system in the event the reaction progresses to the North Quarry are contained in Appendix C of this Plan.

2.2.1 Collector Berms & Access Risers

Gas and liquids that may collect below the EVOH geomembrane cap will be intercepted and controlled by several components of the cap integrity system, including the strip drains and collector berms (refer to Sheet 3 and the "4" Series Sheets for the proposed berm collector locations and the corresponding Details 2 and 3 can be found on Sheet 10 of the engineering drawings). Strip drains (as shown in Detail 5, Sheet 11) will be installed on the surface of the cap soils, at a diagonal to the slope – these will serve as interceptors for any liquids/gas moving along the soil/geomembrane interface between collector berms. Liquids/gas collected by the strip drains will be directed to the collector berms (See Details 2, ~~and~~ 3 and 3A on Sheet 10), consisting of both perforated piping and stone. These collectors will provide periodic points (riser locations a minimum of every 500 feet) for gas extraction and a direct conduit for gravity drainage of liquids to the perimeter collection trench. The collector berms will be trenched into the existing cap soils as shown on Details 2, ~~and~~ 3 and 3A on Sheet 10.

Liquids that are directed to the perimeter collection trench will be removed at a series of collection sumps installed along the perimeter collection trench. These sumps will be installed at both natural and artificial low points within this trench and will allow for

removal of collected liquids utilizing a pneumatic pumping system. The perimeter collection trench will also serve to intercept any liquids/gases collected near the perimeter of the area. Liquids will be discharged to the proposed forcemain, which will convey these liquids to the leachate management system for treatment and disposal.

Collected gas will be directed to the existing GCCS for treatment and disposal via the landfill's flaring system. Supplemental lateral piping will be constructed above the temporary EVOH geomembrane cap to provide vacuum, to the extraction points and convey gas to the existing GCCS.

Component construction will generally consist of the following:

- Strip drains will be laid on the surface of the cap soil (subsequent to subgrade preparations, refer to Section 3.2) at a diagonal to the slope.

- Collector berms will be trenched into the surface of the cap soils (See Details 2, ~~and~~ 3 and 3A on Sheet 10 of the revised design drawings), perpendicular to the slope to promote maximum drainage potential, and intercepting the strip drains. The collector berms will incorporate both perforated piping and 2 to 3 inch washed river stone to collect both gas and liquids. The collector berms will drain liquids to the perimeter collection trench. Collected gas will be directed to the existing GCCS for treatment and disposal. Extraction points will be installed a minimum of every 500 feet as noted on Details 2, ~~and~~ 3 and 3A on Sheet 10 of the design Plan set. Extraction points will be provided with a wellhead for control of both applied vacuum as well as gas flow. These extraction points will also serve as risers to allow periodic jetting of the lines in the event that they become clogged.

- The perimeter collection trench (See Sheet 3 and Details 1 and 2 on Sheet 8 of the engineering plans) will be excavated near the perimeter of the project area or along the interface of the existing South Quarry EVOH geomembrane or HDPE cap and will serve to collect liquids and gas intercepted by the trench itself as well as from the strip drains and collector berms. The perimeter collection trench will incorporate both 2 to 3 inch washed river stone and perforated piping. Cleanouts will be incorporated into the piping to allow periodic jetting of the lines in the event that they become clogged. These cleanouts will be installed at intervals of approximately 500 feet or at midpoints between the collection sumps.

- Perimeter collection sumps will be excavated into the refuse utilizing a tracked excavator, common to landfill construction applications. The sump structure will be set into place and backfilled with 2 to 3 inch washed river stone to provide a conduit for liquids/gas entry into the sump. Liquids/gas will be capable of

entering the sumps from the collection components by means of both the stone backfill as well as piping connections directly to the sump structure. The sumps will also be fitted with mechanisms for the vacuum extraction of collected gas and the discharge of collected liquids via a pneumatic pumping system.

2.2.2 Perimeter Collection Trench, and Collection Sumps

The perimeter trench will be outfitted with a 6-inch diameter perforated SDR 17 HDPE pipe which will be connected to each collection sump (refer to Detail 2 on Sheet 8 of the engineering plans). Clean-outs will be provided between sumps to flush the piping each way ("Y" connection). Perimeter collection sumps will be installed to a depth of 20 feet below existing grade.

2.2.3 Above Cap Piping

Above cap piping will largely run perpendicular to the landfill slope and adjacent to the collector berms and access roads. The piping will be secured by means of FML straps wrapping the piping and welded to the EVOH geomembrane cap. These straps will be installed at a frequency as necessary to prevent pipe movement as field conditions dictate the need. The above cap piping will be connected to the existing GCCS piping by means of standard fusion joints, flanges or flexible connectors as warranted by the conditions of individual extraction points. Refer to Sheet 6 of the engineering plans for the proposed locations of this piping.

2.3 Collection Sumps and Wastewater Force Main

The collection sumps will have an extraction pump driven by air pressure similar to the units currently being used in extraction wells around the perimeter of the North Quarry. A new double-walled 3-inch SDR 11 / 6-inch SDR 17 HDPE perimeter forcemain will be constructed to covey the liquid pumped from the collection sumps to the leachate management system for disposal as described in Note 3 on Sheet 6. Detail 1 on Sheet 9 shows the details of the connection of the collection sump to the forcemain and airline. The forcemain will be constructed above the temporary cap to provide access for maintenance and other possible tie-ins if additional pumping units are necessary in the future. The forcemain will have cleanout risers spaced at approximately 500 feet per Detail 4, Sheet 9. The location of the forcemain will be field fit at the perimeter of the landfill for access to the proposed collection sumps.

Additionally, each sump will be fabricated with a 2-inch diameter suction line and a tank fitting. This will allow the sump to be evacuated manually during emergency situations or in the event that the pump malfunctions.

2.4 Stormwater Management System

The stormwater management system design has been described in detail in the Stormwater Management System Design Report, dated July 2013 and included with this Plan as Appendix D. The report describes the techniques that the North Quarry will employ to manage the increased runoff from the temporary cap. The stormwater management system has been designed for a 24-hour / 25-year storm event in accordance with the Missouri Rules of Natural Resources, Division 80 Solid Waste Management Chapter 3 Sanitary Landfill Section 10 CSR 80-3.010(8)(F) Water Quality. The stormwater management features for the North Quarry EVOH geomembrane cap include:

- Regrading of the existing benches to promote sheet flow
- Existing and proposed perimeter channels and culverts to collect and convey the runoff
- Conveyance of stormwater to two existing detention basin located at the north and southwest sides of the South Quarry
- One proposed detention basin located southeast of the North Quarry
- Other miscellaneous details to deflect runoff or dissipate energy

3 INSTALLATION CONSIDERATIONS

3.1 Phased Installation

Bridgeton Landfill and its contractors are planning to utilize a phased installation approach for the EVOH geomembrane cap and the cap integrity system. The approximate phase boundaries are presented on the engineering drawings and may vary depending upon field and weather conditions. ~~Since the entire EVOH geomembrane cap and integrity system requires installation as the reaction monitoring thresholds are triggered, the~~ The entire project is essentially on critical path for completion; and therefore, multiple contractor crews may be working simultaneously to complete this work. The project has been divided into ~~three~~two phases designated ~~1A, 1B~~ 1 and 2 as shown on the engineering plans. ~~Phases 1A and 1B would be constructed upon the monitoring results reaching established criteria set forth in the Contingency Plan.~~ Phase 1 will be constructed initially. Phase 2 ~~would~~will be constructed upon completion of the isolation barrier cutoff trench as shown in Detail 7, Sheet 11. Therefore, the limit of the EVOH Geomembrane Cap for Phases ~~1B~~ 1 and 2 and associated cap components may be revised upon completion of the isolation barrier cutoff trench design.

~~A phased approach for phases 1A and 1B allows for both construction management and scheduling of the work as well as the facilitation of more than one contractor crew to work on the North Quarry area of the landfill.~~ Each phase will have construction tasks completed sequentially to prepare for the installation of the EVOH geomembrane cap. These preparatory tasks include the following:

1. Subgrade preparations including vegetative layer stripping and existing stormwater bench and localized settlement zone re-grading.
2. Installation of replacement leachate sumps
3. Installation of the perimeter toe collection trench (with geomembrane seal), sump, forcemain and airline
4. Installation of strip drains and collector berms and risers
5. Below EVOH geomembrane cap geotextile and below and above EVOH geomembrane cap geocomposite placement in proposed access road areas

Subsequent to the "under" EVOH geomembrane cap preparations, the EVOH geomembrane cap and above cap piping will be installed. Concurrently, with this phased construction on the North quarry, stormwater management system enhancements will occur. It is anticipated that one contractor would be used to install the EVOH

geomembrane cap / cap integrity system and a separate civil earthworks contractor will be used for the major stormwater management features.

3.2 Subgrade Preparations

Bridgeton Landfill and its contractors are planning to strip as much of the vegetative cap as practically possible, but at a minimum a 20 foot strip immediately below the proposed light-duty access roads will be cleared of the existing vegetative layer. The vegetative layer is expected to range in depth from 2 inches to 8 inches depending upon the area of the landfill. The vegetative layer will be only stripped immediately prior to the placement of the EVOH geomembrane cap. This existing vegetative layer is an important erosion control and stormwater best management practice and therefore timely removal may not be possible depending upon weather conditions and the temporary cap placement progress. The stripped vegetative layer may be re-used for random fill in localized settlement areas in preparation for the EVOH geomembrane cap placement.

Re-grading will occur at a minimum at the existing stormwater benches to promote positive drainage down across these zones. Other localized settlement areas will be re-graded as needed to maintain positive surface drainage across these portions of the landfill soil cap. A field decision will be made by the Bridgeton Landfill engineer's representative during subgrade preparations to identify those areas that require additional random fill or just a re-grading effort. These decisions will be governed by the overlying integrity components and their required minimum slopes during placement. Re-grading areas to maintain positive drainage will be surveyed and documented in the CQA report and system as-built drawings.

3.3 Waste Management

It is expected that minimal waste will be generated from construction of the EVOH geomembrane cap project. Solid waste will be generated during the installation of the perimeter collection sumps. From work completed in the South Quarry, it can be assumed that approximately 10 feet of soil cover underlain by solid waste will be disturbed. Therefore, 10 foot depth of solid waste with a three foot diameter hole at each perimeter collection sump equates to approximately 2.6 bank cubic yards of solid waste from each sump location. During the excavation of the waste, the material will be placed directly into lined roll-off containers or in a haul truck provided by Bridgeton Landfill. Once the containers are full, they will be tarped and transported to the on-site transfer station or hauled directly to Roxanna Landfill. Bridgeton Landfill will be handling the transportation of these wastes either from the transfer station or the direct haul to Roxanna Landfill.

The waste handling protocol at the Transfer Station is to place the initial lifts with the excavated spoil material in each transfer trailer or truck, and then spoil material will be capped with waste that has been received at the Transfer Station from other sources. This

approach minimizes odors from emanating to the atmosphere during waste transport to the landfill.

4 CONSTRUCTION QUALITY CONTROL AND SURVEYING

4.1 Construction Quality Control & Surveying

A detailed construction quality assurance / quality control (QA/QC) plan entitled, Temporary Cap and Cap Integrity System Construction Quality Assurance Plan has been prepared for the Bridgeton Landfill ~~in a separate document.~~ and is included in Appendix E This plan ~~has addressed~~addresses the measures to confirm industry accepted practices for the installation of the geosynthetic products and earthworks related to the installation of the EVOH geomembrane cap and cap integrity system.

5 OPERATIONS MAINTENANCE PLAN

5.1 Operations Maintenance Plan

A detailed operations maintenance and monitoring plan (OM&M Plan) will be prepared and submitted under separate cover to the MDNR. The OM&M Plan will address~~es~~ the measures and guidelines for maintaining the integrity and operations of the EVOH Geomembrane cap and its underlying integrity system.

LIMITATIONS

The work product included in the attached was undertaken in full conformity with generally accepted professional consulting principles and practices and to the fullest extent as allowed by law we expressly disclaim all warranties, express or implied, including warranties of merchantability or fitness for a particular purpose. The work product was completed in full conformity with the contract with our client and this document is solely for the use and reliance of our client (unless previously agreed upon that a third party could rely on the work product) and any reliance on this work product by an unapproved outside party is at such party's risk.

The work product herein (including opinions, conclusions, suggestions, etc.) was prepared based on the situations and circumstances as found at the time, location, scope and goal of our performance and thus should be relied upon and used by our client recognizing these considerations and limitations. Cornerstone shall not be liable for the consequences of any change in environmental standards, practices, or regulations following the completion of our work and there is no warrant to the veracity of information provided by third parties, or the partial utilization of this work product.

APPENDIX A

MANUFACTURER'S INFORMATION FOR EVOH GEOMEMBRANE

RAVEN
INDUSTRIES

TO: Republic Services

SUBJECT: Raven X60FC1 QA testing methods and frequency (rev. 3)

DATE: April 12, 2013

IN REFERENCE TO: Bridgeton Landfill project, Bridgeton, MO

Raven X60FC1 geomembrane and its components undergo an extensive array of testing and measurement during the manufacturing process. The required tests, methods, and sampling frequency are based on the requirements set forth in GRI GM 13 ('Test Methods, Test Properties and Testing Frequency for High Density Polyethylene (HDPE) Smooth and Textured Geomembranes')

The minimum test values for X60FC1 using these test methods are listed the table provided with this letter.

Clint Boerhave

Clint Boerhave
Quality Manager
Raven Industries - Engineered Films Division

RAVEN
INDUSTRIES

STATEMENT OF PERFORMANCE

SUBJECT: Raven X60FC1

IN REFERENCE TO: Seam testing minimum values and material separation in plane (SIP)
Republic Services Landfill cap project - Bridgeton, Missouri
SO# 195942-195948, 195950-195954

DATE: April 5, 2013

Absolute Barrier™ X60FC1 is a seven layer co-extruded textured geomembrane consisting of polyethylene with a core layer designed specifically as a barrier against radon, methane and VOCs on brownfield sites, residential and commercial buildings, and geomembrane containment and covering systems. A robust stabilization package provides long-term protection from thermal oxidation and ultraviolet degradation in exposed applications.

Due to the multilayer construction and the presence of a barrier core in this product, some separation in plane may occur during destructive seam testing. This is normal and should not be of concern as long as the tested peel and shear results meet the minimum values for this product:

Hot Wedge Seams	Minimum value
Shear Strength (lb/in)	80
Peel Strength (lb/in)	60
Extrusion Fillet Seams	
Shear Strength (lb/in)	80
Peel Strength (lb/in)	52

Clint Boerhave

Clint Boerhave
Quality Manager
Engineered Films Division

Test methods, minimum values, and test frequency for Raven X60FC1

Properties	Test Method	Test Value	Testing Frequency (minimum)
Thickness mils (min. ave.) • lowest individual for 8 out of 10 values • lowest individual for any of the 10 values	D 5994	50 mils 45 mils 35 mils	per roll
Asperity Height mils (min. ave.)	GM 12	10 mils	per roll
Tensile Properties (3) (min. ave.) • break strength – lb/in. • MD break elongation - % (min. avg.) • TD break elongation - % (min. avg.)	6693 Type IV	 75 200 30	20,000 lb
Tear Resistance – lb (min. ave.)	D 1004	27	45,000 lb
Puncture Resistance – lb (min. ave.)	D 4833	55	45,000 lb
Oxidative Induction Time (OIT) (min. ave.) (a) Standard OIT — or — (b) High Pressure OIT	 D 3895 D 5885	 100 400	200,000 lb

APPENDIX B

CONSTRUCTION PLANS FOR THE NORTH QUARRY - EVOH GEOMEMBRANE CAP AND CAP INTEGRITY SYSTEM

CONSTRUCTION PLANS FOR THE

NORTH QUARRY - EVOH GEOMEMBRANE CAP AND CAP INTEGRITY SYSTEM AT BRIDGETON LANDFILL

BRIDGETON, MISSOURI

JULY 2013

REVISED OCTOBER 2013 ⚠1

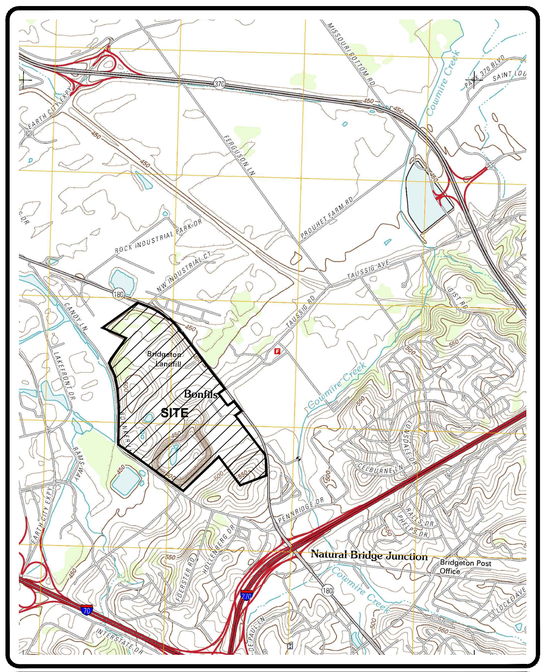



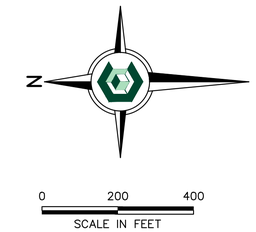

LEGEND

- EXISTING PROPERTY BOUNDARY
- SOLID WASTE PERMIT 118912 BOUNDARY
- EXISTING 10' CONTOUR
- EXISTING 2' CONTOUR
- EXISTING HDPE GEOMEMBRANE
- SOUTH QUARRY EVOH GEOMEMBRANE (UNDER CONSTRUCTION)
- LIGHT-DUTY ACCESS ROADS (UNDER CONSTRUCTION)
- OU-1 HAZARDOUS DISPOSAL AREA AS DEFINED BY ROD (LIMIT OF STUDY AREA)
- LIMIT OF RADIOLOGICALLY IMPACTED MATERIAL BOUNDARY
- PROPOSED EVOH GEOMEMBRANE CAP BOUNDARY
- PROPOSED CAP PHASE BOUNDARY
- PROPOSED CAP PHASE DESIGNATION
- OUTFALL 007
- OUTFALL 003
- OUTFALL 004
- OUTFALL 005

NOTES:

1. THE 2013 TOPOGRAPHIC MAP WAS PROVIDED BY COOP AERIAL SURVEYORS, CO., PHOENIX, AZ. DATE OF PHOTO: 02/13/2013.
2. UTILITIES SHOWN TAKEN FROM DRAWING 1 OF 1 "SITE INFRASTRUCTURE" BY AQUATERRA DATED 09/16/13. 1
3. THE PROPERTY BOUNDARY WAS OBTAINED FROM A DRAWING FILE ENTITLED, "BRIDGETON AND WESTLAKE LANDFILLS LANDFILL PARCEL REFERENCE MAP" PREPARED BY SHERBUT-CARSON-CLAYTON LLC, DATED JUNE 2011.
4. THE OU-1 HAZARDOUS DISPOSAL AREA AS DEFINED BY ROD BOUNDARY WAS OBTAINED FROM A DRAWING ENTITLED, "REVISED WASTE BOUNDARIES BRIDGETON LANDFILL WASTE INVESTIGATION" PREPARED BY AQUATERRA ENVIRONMENTAL SOLUTIONS, INC. DATED 7/9/10, REVISED 7/1/11.
5. THE LIMIT OF RADIOLOGICALLY IMPACTED MATERIAL BOUNDARY WAS PROVIDED BY CIVIL & ENVIRONMENTAL CONSULTANTS, INC. IN AN EMAIL DATED 7/19/2013.
6. THE SOLID WASTE PERMIT BOUNDARY WAS OBTAINED FROM A DRAWING FILE ENTITLED BRIDGETON AND WESTLAKE LANDFILLS LANDFILL PARCEL REFERENCE MAP PREPARED BY SHERBUT-CARSON-CLAYTON LLC, DATED JUNE 2011.
7. MANY OF THE ITEMS SHOWN AS UNDER CONSTRUCTION HAVE BEEN COMPLETED AND AS-BUILT DOCUMENTATION WILL BE SUBMITTED SEPARATELY. 1

STATE OF MISSOURI
ADAM STEVEN LAKAY
NUMBER E-28655
REGISTERED PROFESSIONAL ENGINEER

10/4/13

REV	DATE	DESCRIPTION	DWN BY	DES BY	CHK BY	APP BY
1	10/04/13	RESPONSE TO 09/17/13 MDNR COMMENTS	TAD	JGW	ASL	BOS

DATE OF ISSUE 07/26/13
DRAWN BY TAD
DESIGNED BY JGW
CHECKED BY BOS
APPROVED BY ASL

CORNERSTONE Environmental Group, LLC

This drawing represents intellectual property of Cornerstone Environmental Group, LLC. Any modification to the original by other than Cornerstone Environmental Group, LLC personnel violates its original purpose and as such is rendered void. Cornerstone Environmental Group, LLC will not be held liable for any changes made to this document without express written consent of the originator.

BRIDGETON LANDFILL, LLC.
BRIDGETON LANDFILL
BRIDGETON, MISSOURI

NORTH QUARRY - EVOH GEOMEMBRANE CAP AND CAP INTEGRITY SYSTEM

SITE PLAN

SHEET NO. 1

PROJECT NO. 130520

File: X:\PROJECTS\BRIDGETON (MO)\130520 - NORTH QUARRY CONTINGENCY PLAN_PROJECT DWGS\CAP PLANS\FHBL NQ EX SP.dwg Layout: 01 EX SITE PLAN User: thierry.dechape Oct 04, 2013 - 2:34pm

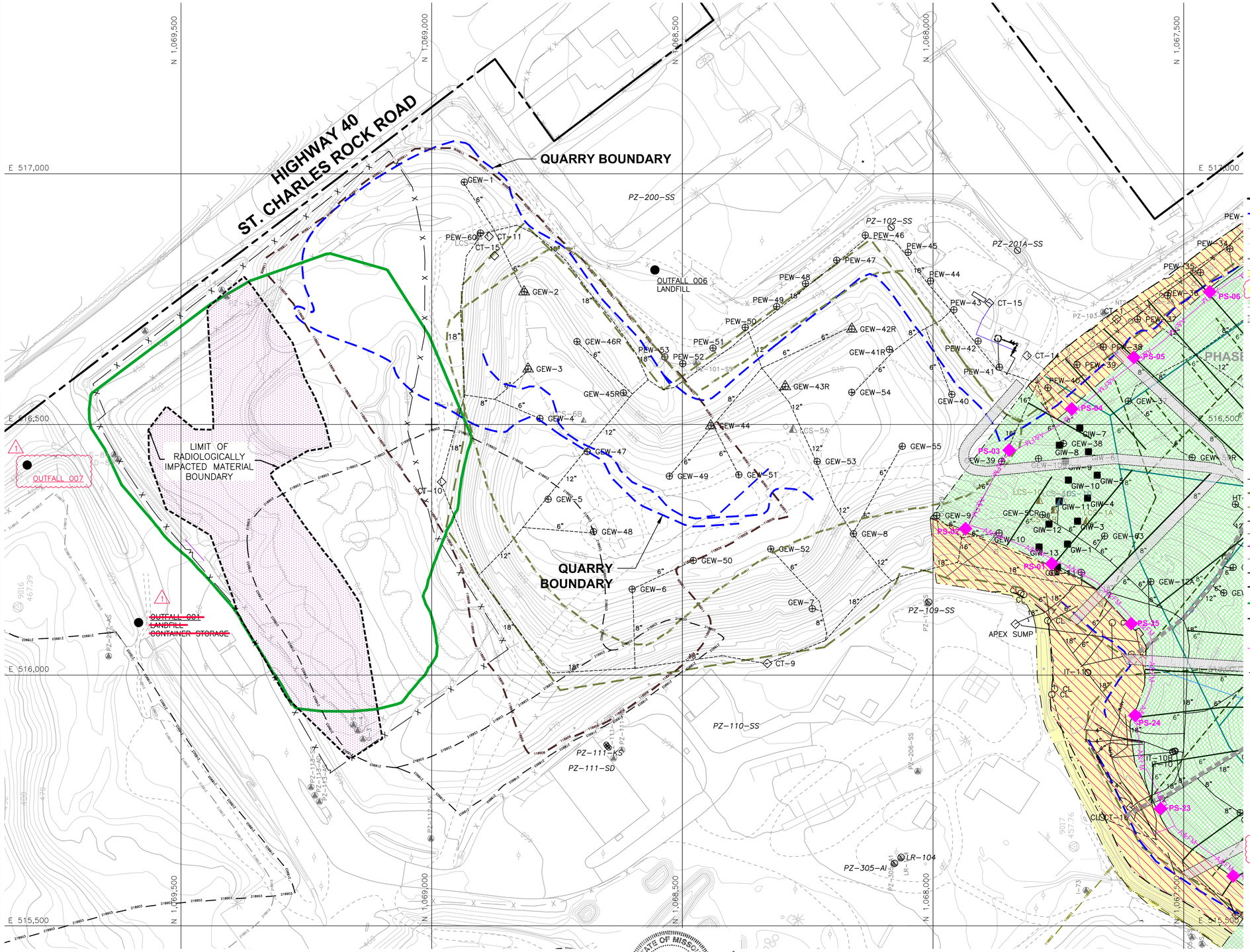
HIGHWAY 40
ST. CHARLES ROCK ROAD
QUARRY BOUNDARY
QUARRY BOUNDARY
LIMIT OF RADIOLOGICALLY IMPACTED MATERIAL BOUNDARY
OUTFALL 007
OUTFALL 007 LANDFILL CONTAINER STORAGE
OUTFALL 006 LANDFILL
APEX SUMP
PHASE I
PHASE II
N 1,069,500
N 1,069,000
N 1,068,500
N 1,068,000
N 1,067,500
E 517,000
E 516,500
E 516,000
E 515,500
PZ-200-SS
PZ-102-SS
PZ-201A-SS
PZ-101-SS
PZ-109-SS
PZ-110-SS
PZ-111-KS
PZ-111-SD
PZ-206-SS
PZ-305-AI
LR-104
GEW-1
GEW-2
GEW-3
GEW-4
GEW-5
GEW-6
GEW-7
GEW-8
GEW-9
GEW-10
GEW-11
GEW-12A
GEW-38
GEW-39
GEW-40
GEW-41R
GEW-42R
GEW-43R
GEW-44
GEW-45R
GEW-46R
GEW-47
GEW-48
GEW-49
GEW-50
GEW-51
GEW-52
GEW-53
GEW-54
GEW-55
GEW-5CR
PEW-35
PEW-36
PEW-37
PEW-38
PEW-39
PEW-40
PEW-41
PEW-42
PEW-43
PEW-44
PEW-45
PEW-46
PEW-47
PEW-48
PEW-49
PEW-50
PEW-51
PEW-52
PEW-53
PEW-60
GIW-1
GIW-3
GIW-4
GIW-7
GIW-8
GIW-9
GIW-10
GIW-11
GIW-12
GIW-13
CT-1
CT-9
CT-10
CT-11
CT-14
CT-15
IT-10
IT-10B
IT-11
PS-01
PS-03
PS-04
PS-05
PS-06
PS-23
PS-24
PS-25
LCS-1A
LCS-5A
LCS-6B
LCS-11
HT-1
HT-2
HT-3
HT-4
HT-5
HT-6
HT-7
HT-8
HT-9
HT-10
HT-11
HT-12
HT-13
HT-14
HT-15
HT-16
HT-17
HT-18
HT-19
HT-20
HT-21
HT-22
HT-23
HT-24
HT-25
HT-26
HT-27
HT-28
HT-29
HT-30
HT-31
HT-32
HT-33
HT-34
HT-35
HT-36
HT-37
HT-38
HT-39
HT-40

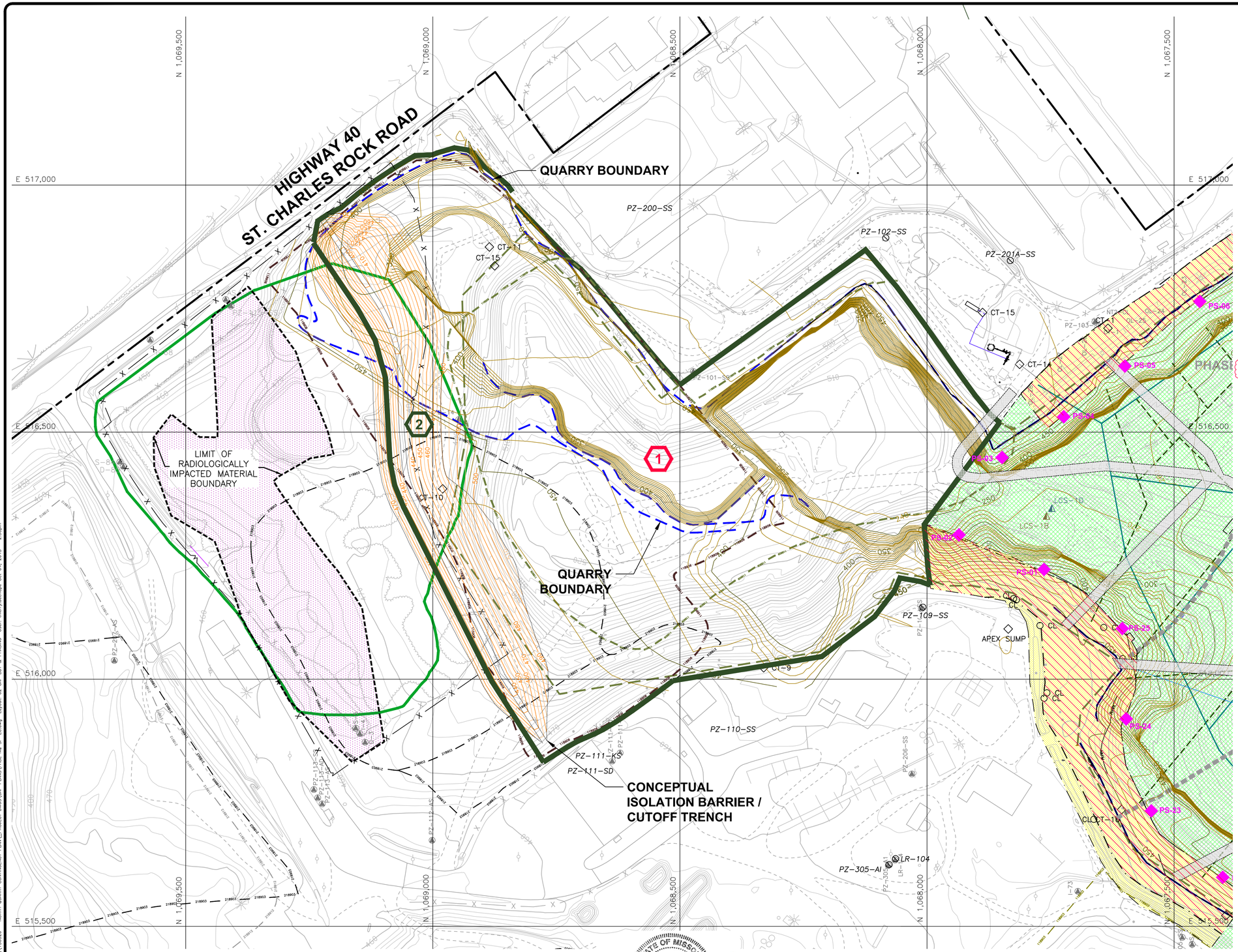

N

0 100 200

SCALE IN FEET

LEGEND

- EXISTING PROPERTY BOUNDARY
- EXISTING QUARRY BOUNDARY
- EXISTING 10' CONTOUR
- EXISTING 2' CONTOUR
- QUARRY BOTTOM 50' CONTOUR
- QUARRY BOTTOM 10' CONTOUR
- SOLID WASTE PERMIT 118912 BOUNDARY
- PERMIT #118906 BOUNDARY
- PERMIT #118908 BOUNDARY
- PERMIT #118909 BOUNDARY
- PERMIT #218912 BOUNDARY
- PERMIT #218903 BOUNDARY
- 2013 FENCING
- EXISTING SOUTH QUARRY HDPE GEOMEMBRANE CAP
- EXISTING HDPE GEOMEMBRANE WITH EVOH LINER OVERCAP 1
- SOUTH QUARRY EVOH GEOMEMBRANE CAP (UNDER CONSTRUCTION)
- GEW-81 EXISTING LFG EXTRACTION WELL
- GEW-2 EXISTING LFG EXTRACTION WELL – COMBO
- PEW-4 EXISTING LFG PERIMETER EXTRACTION WELL
- CT-1 EXISTING CONDENSATE PUMP STATION
- TMP-1 EXISTING TEMPERATURE MONITORING PROBE
- GMP-11 EXISTING GAS MONITORING PROBE
- PZ-109-SS EXISTING PIEZOMETER
- IT-3 EXISTING INTERCEPTION TRENCH WELL
- LIMIT OF RADIOLOGICALLY IMPACTED MATERIAL BOUNDARY OU-1 HAZARDOUS DISPOSAL AREA AS DEFINED BY ROD (LIMIT OF STUDY AREA)
- PROPOSED EVOH GEOMEMBRANE CAP BOUNDARY
- PROPOSED CAP PHASE BOUNDARY
- 1 PROPOSED CAP PHASE DESIGNATION

CAP PHASE SUMMARY TABLE 1

CAP PHASE	AREA (ACRES)	COMMENT
1	15.04	INCLUDES WASTE AREA UP TO CUTOFF TRENCH AND ALLOWS FOR CUTOFF TRENCH CONSTRUCTION
2	6.05	INCLUDES WASTE AREA REMAINING SOUTH OF CUTOFF TRENCH FOLLOWING TRENCH CONSTRUCTION
TOTAL	21.09	

NOTES:

1. THE 2013 TOPOGRAPHIC MAP WAS PROVIDED BY COOP AERIAL SURVEYORS, CO., PHOENIX, AZ. DATE OF PHOTO: 02/13/2013.
2. THE CONCEPTUAL ISOLTION BARRIER /CUTOFF TRENCH SHOWN IS THE PROPOSED EXCAVATION ALIGNMENT N-3 DESIGN PREPARED BY P.J. CAREY & ASSOCIATES, P.C. DATED 3/28/2013. THE ISOLATION BARRIER /CUTOFF TRENCH DESIGN AND LOCATION WILL BE FINALIZED AFTER SUBMISSION OF THE NORTH QUARRY EVOH GEOMEMBRANE CAP AND CAP INTEGRITY SYSTEM DESIGN FOLLOWING A FIELD SUBSURFACE INVESTIGATION. THEREFORE THE LIMIT OF CAPPING FOR (PHASES 1) AND 2 AND ASSOCIATED CAP COMPONENTS MAY BE REVISED UPON COMPLETION OF THE CUTOFF TRENCH DESIGN. 1
3. THE SOLID WASTE PERMIT BOUNDARIES WERE OBTAINED FROM A DRAWING FILE TITLED "BRIDGETON AND WESTLAKE LANDFILLS LANDFILL PARCEL REFERENCE MAP" PREPARED BY SHERBUT-CARSON-CLAYTON LLC, DATED JUNE 2011.
4. THE QUARRY BOTTOM CONTOURS WERE DEVELOPED FROM AN ELECTRONIC FILE PROVIDED B P.J. CAREY & ASSOCIATES, P.C. WHICH WAS DERIVED FROM A 1997 AERIAL MAP PROVIDED BY AQUATERRA ENVIRONMENTAL SOLUTIONS, INC. 1
5. MANY OF THE ITEMS SHOWN AS UNDER CONSTRUCTION HAVE BEEN COMPLETED AND AS-BUILT DOCUMENTATION WILL BE SUBMITTED SEPARATELY.

STATE OF MISSOURI
ADAM S. LEYTEN
NUMBER E-23555
REGISTERED PROFESSIONAL ENGINEER
10/4/13

REV	DATE	DESCRIPTION	DWN BY	DES BY	CHK BY	APP BY
1	10/04/13	RESPONSE TO 09/17/13 MDNR COMMENTS	TAD	JGW	ASL	BOS

DATE OF ISSUE 07/26/13 DRAWN BY TAD DESIGNED BY JGW CHECKED BY BOS APPROVED BY ASL

CORNERSTONE Environmental Group, LLC

This drawing represents intellectual property of Cornerstone Environmental Group, LLC. Any modification to the original by other than Cornerstone Environmental Group, LLC personnel violates its original purpose and as such is rendered void. Cornerstone Environmental Group, LLC will not be held liable for any changes made to this document without express written consent of the originator.

BRIDGETON LANDFILL, LLC.
BRIDGETON LANDFILL
BRIDGETON, MISSOURI

NORTH QUARRY - EVOH GEOMEMBRANE CAP AND CAP INTEGRITY SYSTEM
CAP BOUNDARY AND PHASING PLAN

SHEET NO. **2**
PROJECT NO. 130520

1" 1/2" 0" 1"

File: X:\PROJECTS\BRIDGETON (MO)\130520 - NORTH QUARRY CONTINGENCY PLAN_PROJECT DWGS\CAP PLANS\FIG. NQ SP-05.dwg Layout: 02 CAP BDY & PHASING User: hkerry Archived: Oct 04, 2013 - 2:38pm

HIGHWAY 40
ST. CHARLES ROCK ROAD

LIMIT OF RADIOLOGICALLY IMPACTED MATERIAL BOUNDARY

CONCEPTUAL ISOLATION BARRIER / CUTOFF TRENCH

118912R PERMIT BOUNDARY

ABANDONED LCP LINE

APEX SUMP

PHASE 2

N 1,069,500
N 1,069,000
N 1,068,500
N 1,068,000
N 1,067,500
E 517,000
E 516,500
E 516,000
E 515,500

0 100 200
SCALE IN FEET

LEGEND

- SOLID WASTE PERMIT 118912 BOUNDARY
- EXISTING 10' CONTOUR
- EXISTING 2' CONTOUR
- EXISTING HORIZONTAL LFG COLLECTOR
- EXISTING LEACHATE FORCEMAIN
- EXISTING CONDENSATE DRAIN LINE
- EXISTING AIR LINE
- EXISTING UNDERGROUND ELECTRIC
- LIMIT OF RADIOLOGICALLY IMPACTED MATERIAL BOUNDARY OU-1 HAZARDOUS DISPOSAL AREA AS DEFINED BY ROD (LIMIT OF STUDY AREA)
- EXISTING HDPE GEOMEMBRANE
- EXISTING HDPE GEOMEMBRANE WITH EVOH LINER OVERCAP 1
- SOUTH QUARRY EVOH GEOMEMBRANE (UNDER CONSTRUCTION)
- LIGHT-DUTY ACCESS ROADS (UNDER CONSTRUCTION)
- PROPOSED LIGHT-DUTY ACCESS ROADS
- GEW-81 EXISTING LFG EXTRACTION WELL
- GEW-2 EXISTING LFG EXTRACTION WELL – COMBO
- PEW-4 EXISTING LFG PERIMETER EXTRACTION WELL
- CT-1 EXISTING CONDENSATE PUMP STATION
- TMP-1 EXISTING TEMPERATURE MONITORING PROBE
- GMP-11 EXISTING GAS MONITORING PROBE
- IT-3 EXISTING INTERCEPTION TRENCH WELL
- GIW-10 EXISTING LFG INTERCEPTOR WELL
- PZ-109-SS EXISTING PIEZOMETER
- LCS-5 LEACHATE COLLECTION SUMP 1
- PROPOSED PERIMETER TOE COLLECTOR (SEE DETAIL 2/8)
- PROPOSED BELOW CAP BERM COLLECTOR (SEE DETAILS 2/10 & 3/10)
- PROPOSED STRIP DRAINS (SEE DETAIL 5/11)
- PS-26 PROPOSED PERIMETER COLLECTION SUMP (SEE DETAIL 1/8)
- WELLHEAD RISER (SEE DETAIL 3/10)
- CS-1 PROPOSED CONTAINMENT PUMP STATION (SEE DETAIL 6/11)
- PROPOSED EVOH GEOMEMBRANE CAP BOUNDARY
- PROPOSED CAP PHASE BOUNDARY
- 1 PROPOSED CAP PHASE DESIGNATION 1

NOTES:

1. THE 2013 TOPOGRAPHIC MAP WAS PROVIDED BY COOP AERIAL SURVEYORS, CO., PHOENIX, AZ. DATE OF PHOTO: 02/13/2013.
2. UTILITIES SHOWN TAKEN FROM DRAWING 1 OF 1 "SITE INFRASTRUCTURE" BY AQUATERRA ENVIRONMENTAL SOLUTIONS, INC. DATED 09/19/2013. 1
3. THE PROPOSED NORTH QUARRY EVOH GEOMEMBRANE CAP SHALL BE CONTINUOUSLY WELDED TO THE SOUTH QUARRY GEOMEMBRANE CAP BEING CONSTRUCTED.
4. A STRIP DRAIN SHALL BE CONSTRUCTED BELOW THE TEMPORARY CAP AT THE TOE OF SLOPE PER DETAIL 3, SHEET 11 AT LOCATIONS INDICATED ON SHEET 4A. THE STRIP DRAIN SHALL OUTLET TO A DOUBLE-WALLED CONTAINMENT SUMP PUMP STATION SHOWN IN DETAIL 6, SHEET 11. THE CONTAINMENT SUMP SHALL BE FIELD FIT AT TIME OF CONSTRUCTION.
5. PROPOSED PERIMETER TOE COLLECTOR TO BE CONSTRUCTED WITH MINIMUM 0.5% SLOPE TO SUMPS.
6. SUBGRADE PREPARATION FOR THE PROPOSED NORTH QUARRY EVOH GEOMEMBRANE CAP SHALL INCLUDE THE FOLLOWING:
   A. REGRADING OF THE BENCHES, WHERE INDICATED, PER DETAIL 2, SHEET 11.
   B. INSTALLATION OF AN ADDITIONAL PROTECTIVE GEOTEXTILE OVER RIP-RAP AT EXISTING DOWNCHUTE RIP-RAP CHANNELS IF RIP-RAP IS LEFT IN PLACE.
   C. STRIPPING OF VEGETATION WITHIN THE AREAS SHOWN WHERE "ABOVE CAP" LIGHT DUTY ACCESS ROAD SHALL BE CONSTRUCTED.
   D. STRIPPING OF VEGETATIVE AREAS IN OTHER AREAS EXCEPT WHERE ABOVE GROUND PIPES EXIST, ACCESS IS LIMITED, OR STRIPPING OPERATIONS MAY DELAY CONSTRUCTION OF THE EVOH GEOMEMBRANE CAP.
   E. MINOR GRADING SHALL BE DONE WHERE REQUIRED TO PROMOTE POSITIVE DRAINAGE. 1
7. MANY OF THE ITEMS SHOWN AS UNDER CONSTRUCTION HAVE BEEN COMPLETED AND AS-BUILT DOCUMENTATION WILL BE SUBMITTED SEPARATELY.

STATE OF MISSOURI
ADAM STEVEN LEAKY
NUMBER E-28555
REGISTERED PROFESSIONAL ENGINEER
10/4/13

REV	DATE	DESCRIPTION	DWN BY	DES BY	CHK BY	APP BY
1	10/04/13	RESPONSE TO 09/17/13 MDNR COMMENTS	TAD	JGW	ASL	BOS

DATE OF ISSUE 07/26/13
DRAWN BY TAD
DESIGNED BY JGW
CHECKED BY BOS
APPROVED BY ASL

CORNERSTONE Environmental Group, LLC

This drawing represents intellectual property of Cornerstone Environmental Group, LLC. Any modification to the original by other than Cornerstone Environmental Group, LLC personnel violates its original purpose and as such is rendered void. Cornerstone Environmental Group, LLC will not be held liable for any changes made to this document without express written consent of the originator.

BRIDGETON LANDFILL, LLC.
BRIDGETON LANDFILL
BRIDGETON, MISSOURI

NORTH QUARRY - EVOH GEOMEMBRANE CAP AND CAP INTEGRITY SYSTEM
SUBGRADE/CAP INTEGRITY SYSTEM PLAN - BELOW FINAL CAP

SHEET NO. 3
PROJECT NO. 130520

File: X:\PROJECTS\BRIDGETON (MO)\130520 - NORTH QUARRY CONTINGENCY PLAN_PROJECT DWGS\CAP PLANS\FIN8L NQ CQS-BELOW.dwg Layout: 03-BELOW User: thierry.dechope Oct 04, 2013 - 2:37pm

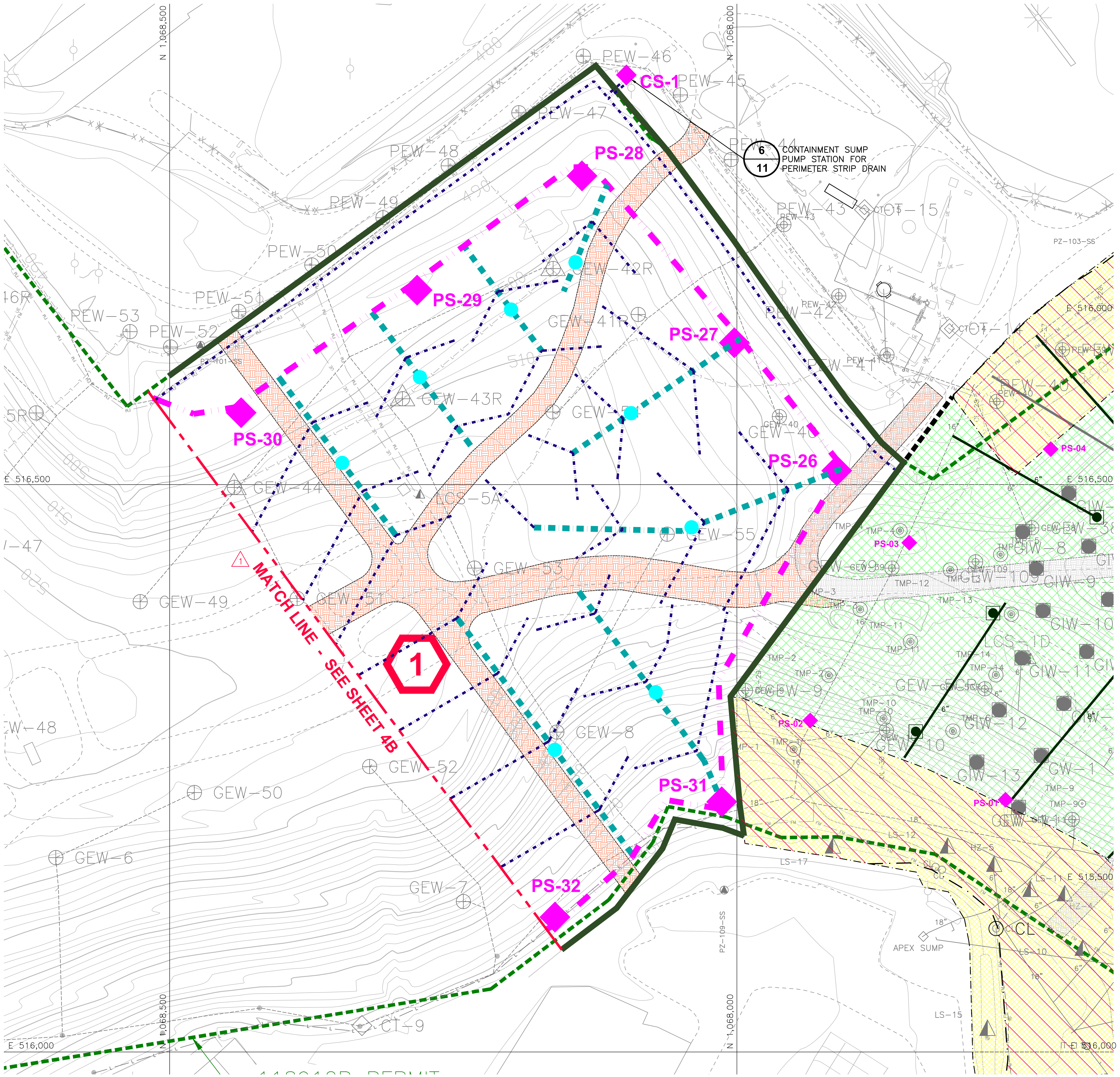

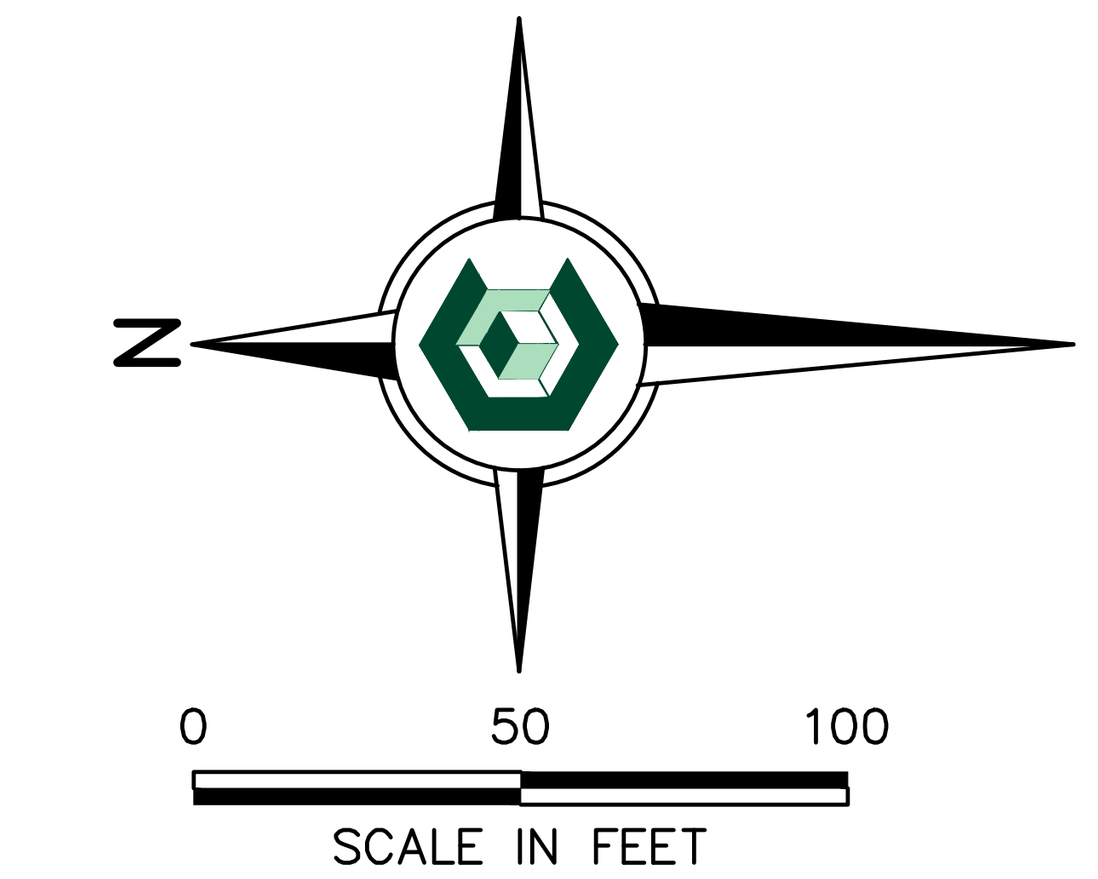

LEGEND

- SOLID WASTE PERMIT 118912 BOUNDARY
- EXISTING 10' CONTOUR
- EXISTING 2' CONTOUR
- EXISTING LFG HEADER/LATERAL
- EXISTING LEACHATE FORCEMAIN
- EXISTING CONDENSATE DRAIN LINE
- EXISTING AIR LINE
- EXISTING UNDERGROUND ELECTRIC
- EXISTING HDPE GEOMEMBRANE
- EXISTING HDPE GEOMEMBRANE WITH EVOH LINER OVERCAP (1)
- SOUTH QUARRY EVOH GEOMEMBRANE (UNDER CONSTRUCTION)
- LIGHT-DUTY ACCESS ROADS (UNDER CONSTRUCTION)
- PROPOSED STRIPPING AREA FOR LIGHT DUTY ACCESS ROAD
- GEW-81 — EXISTING LFG EXTRACTION WELL
- GEW-81 — EXISTING LFG EXTRACTION WELL – COMBO
- PEW-4 — EXISTING LFG PERIMETER EXTRACTION WELL
- CT-1 — EXISTING CONDENSATE PUMP STATION
- TMP-1 — EXISTING TEMPERATURE MONITORING PROBE
- GMP-11 — EXISTING GAS MONITORING PROBE
- IT-3 — EXISTING INTERCEPTION TRENCH WELL
- LCS-5 — LEACHATE COLLECTION SUMP (1)
- PROPOSED CAP LIMIT
- PROPOSED CAP PHASE BOUNDARY
- PROPOSED PERIMETER TOE COLLECTOR (SEE DETAIL 2/8)
- PROPOSED BELOW CAP BERM COLLECTOR (SEE DETAILS 2/10 & 3/10)
- PROPOSED STRIP DRAINS (SEE DETAIL 5/11)
- PS-32 — PROPOSED PERIMETER COLLECTION SUMP (SEE DETAIL 1/8)
- WELLHEAD RISER (SEE DETAIL 3/10)
- CS-1 — PROPOSED CONTAINMENT PUMP STATION (SEE DETAIL 6/11)
- (1) 1 — PROPOSED CAP PHASE DESIGNATION

NOTES:

1. THE 2013 TOPOGRAPHIC MAP WAS PROVIDED BY COOP AERIAL SURVEYORS, CO., PHOENIX, AZ. DATE OF PHOTO: 02/13/2013.
2. UTILITIES SHOWN TAKEN FROM DRAWING 1 OF 1 "SITE INFRASTRUCTURE" BY AQUATERRA ENVIRONMENTAL SOLUTIONS, INC. DATED 09/16/2013. (1)
3. SEE SHEET 5 FOR THE AREA AND LIMITS OF EVOH GEOMEMBRANE.
4. SEE SHEET 6 FOR LOCATIONS OF ABOVE CAP COMPONENTS TO BE CONSTRUCTED ABOVE THE EVOH GEOMEMBRANE.
5. SUBGRADE PREPARATION FOR THE TEMPORARY CAP SHALL INCLUDE:
   A. REGRADING OF THE BENCHES PER DETAIL 1, SHEET 11
   B. INSTALLATION OF AN ADDITIONAL PROTECTIVE GEOTEXTILE OVER RIPRAP AT EXISTING DOWNCHUTE RIPRAP CHANNELS IF RIPRAP IS LEFT IN PLACE
   C. STRIPPING OF VEGETATION WITHIN THE AREAS SHOWN WHERE ABOVE CAP LIGHT-DUTY ACCESS ROADS SHALL BE CONSTRUCTED
   D. STRIPPING OF VEGETATIVE AREAS IN OTHER AREAS EXCEPT WHERE ABOVE GROUND PIPES EXIST, ACCESS IS LIMITED, OR STRIPPING OPERATIONS MAY DELAY CONSTRUCTION OF THE EVOH GEOMEMBRANE
   E. MINOR GRADING SHALL BE DONE WHERE REQUIRED TO PROMOTE POSITIVE DRAINAGE
6. A STRIP DRAIN SHALL BE CONSTRUCTED BELOW THE EVOH GEOMEMBRANE CAP AT THE TOE OF SLOPE PER DETAIL 3, SHEET 11 AT LOCATIONS INDICATED ON THIS SHEET. THE STRIP DRAIN SHALL OUTLET INTO A DOUBLE-WALLED CONTAINMENT SUMP PUMP STATION SHOWN IN DETAIL 6, SHEET 11. THE CONTAINMENT SUMP SHALL BE FIELD FIT AT TIME OF CONSTRUCTION
7. MANY OF THE ITEMS SHOWN AS UNDER CONSTRUCTION HAVE BEEN COMPLETED AND AS-BUILT DOCUMENTATION WILL BE SUBMITTED SEPARATELY. (1)

STATE OF MISSOURI — ADAM STEVEN LARRY — NUMBER E-28655 — REGISTERED PROFESSIONAL ENGINEER

10/4/13

REV	DATE	DESCRIPTION	DWN BY	DES BY	CHK BY	APP BY
1	10/04/13	RESPONSE TO 09/17/13 MDNR COMMENTS	TAD	JGW	ASL	BOS

DATE OF ISSUE 07/26/13 — DRAWN BY TAD — DESIGNED BY JGW — CHECKED BY BOS — APPROVED BY ASL

CORNERSTONE Environmental Group, LLC

This drawing represents intellectual property of Cornerstone Environmental Group, LLC. Any modification to the original by other than Cornerstone Environmental Group, LLC personnel violates its original purpose and as such is rendered void. Cornerstone Environmental Group, LLC will not be held liable for any changes made to this document without express written consent of the originator.

BRIDGETON LANDFILL, LLC.
BRIDGETON LANDFILL
BRIDGETON, MISSOURI

NORTH QUARRY - EVOH GEOMEMBRANE CAP AND CAP INTEGRITY SYSTEM

CAP SUBGRADE PHASING PLAN - PHASE 1 SOUTH

SHEET NO. **4A**

PROJECT NO. 130520

File: X:\PROJECTS\BRIDGETON (MO)\130520 - NORTH QUARRY CONTINGENCY PLAN_PROJECT DWGS\CAP PLANS\FHBL NQ PHASING.dwg Layout: 04A-phasing User: thierry.dechape Oct 04, 2013 - 2:59pm

1" 1/2" 0" 1"

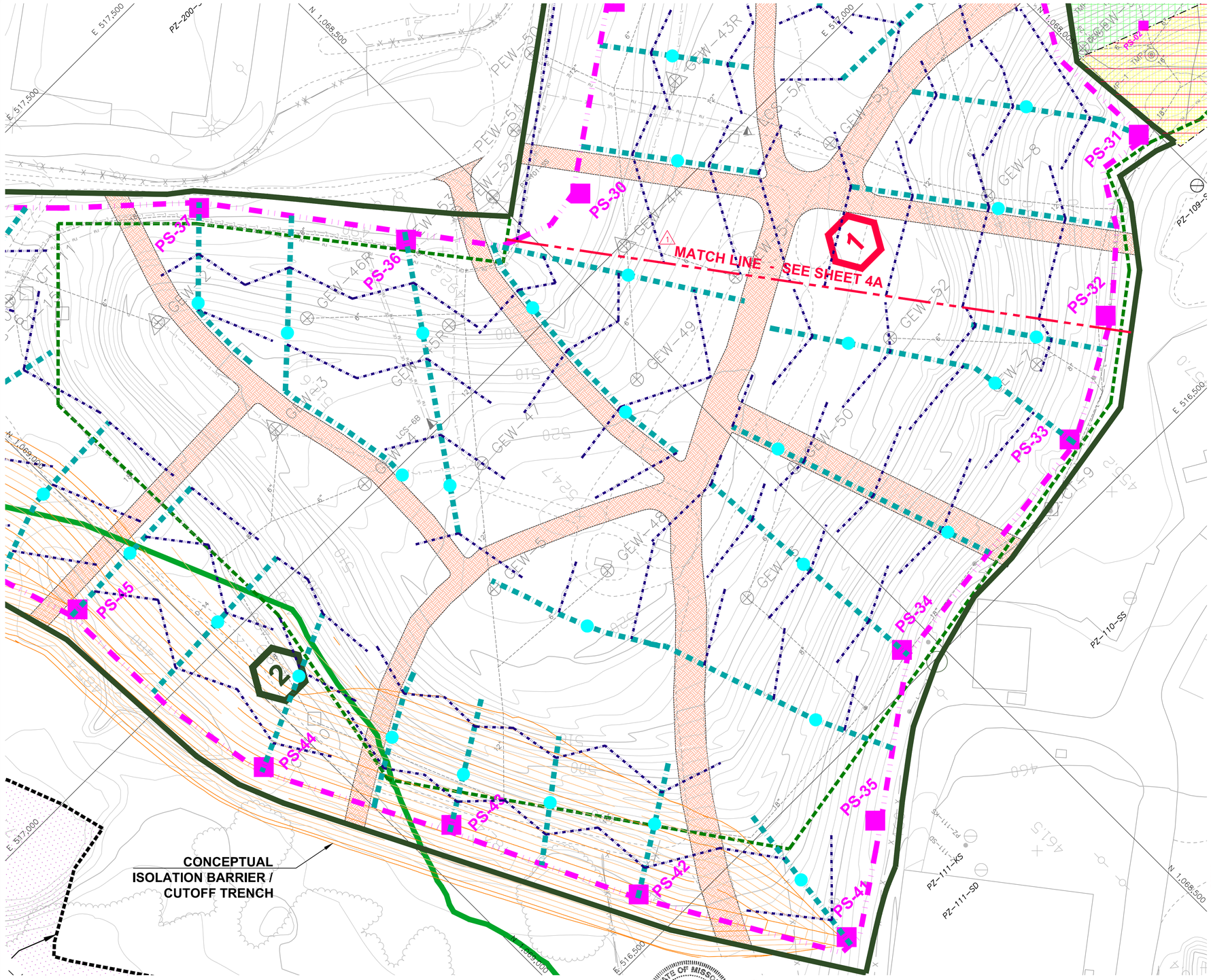

0 50 100

SCALE IN FEET

LEGEND

- SOLID WASTE PERMIT 118912 BOUNDARY
- EXISTING 10' CONTOUR
- EXISTING 2' CONTOUR
- EXISTING LFG HEADER/LATERAL
- EXISTING LEACHATE FORCEMAIN
- EXISTING CONDENSATE DRAIN LINE
- EXISTING AIR LINE
- EXISTING UNDERGROUND ELECTRIC
- EXISTING HDPE GEOMEMBRANE
- EXISTING HDPE GEOMEMBRANE WITH EVOH LINER OVERCAP (1)
- SOUTH QUARRY EVOH GEOMEMBRANE (UNDER CONSTRUCTION)
- LIGHT-DUTY ACCESS ROADS (UNDER CONSTRUCTION)
- PROPOSED STRIPPING AREA FOR LIGHT DUTY ACCESS ROAD
- GEW-81 EXISTING LFG EXTRACTION WELL
- GEW-81 EXISTING LFG EXTRACTION WELL – COMBO
- PEW-4 EXISTING LFG PERIMETER EXTRACTION WELL
- CT-1 EXISTING CONDENSATE PUMP STATION
- TMP-1 EXISTING TEMPERATURE MONITORING PROBE
- GMP-11 EXISTING GAS MONITORING PROBE
- IT-3 EXISTING INTERCEPTION TRENCH WELL
- LCS-5 LEACHATE COLLECTION SUMP (1)
- PROPOSED CAP LIMIT
- PROPOSED CAP PHASE BOUNDARY
- PROPOSED PERIMETER TOE COLLECTOR (SEE DETAIL 2/8)
- PROPOSED BELOW CAP BERM COLLECTOR (SEE DETAILS 2/10 & 3/10)
- PROPOSED STRIP DRAINS (SEE DETAIL 5/11)
- PS-32 PROPOSED PERIMETER COLLECTION SUMP (SEE DETAIL 1/8)
- WELLHEAD RISER (SEE DETAIL 3/10)
- CS-1 PROPOSED CONTAINMENT PUMP STATION (SEE DETAIL 6/11)
- (1) 1 PROPOSED CAP PHASE DESIGNATION

NOTES:

1. THE 2013 TOPOGRAPHIC MAP WAS PROVIDED BY COOP AERIAL SURVEYORS, CO., PHOENIX, AZ. DATE OF PHOTO: 02/13/2013.
2. UTILITIES SHOWN TAKEN FROM DRAWING 1 OF 1 "SITE INFRASTRUCTURE" BY AQUATERRA ENVIRONMENTAL SOLUTIONS, INC. DATED 09/16/2013. (1)
3. SUBGRADE PREPARATION FOR THE EVOH GEOMEMBRANE CAP SHALL INCLUDE:
   - A. REGRADING OF THE BENCHES PER DETAIL 1, SHEET 11
   - B. INSTALLATION OF AN ADDITIONAL PROTECTIVE GEOTEXTILE OVER RIPRAP AT EXISTING DOWNCHUTE RIPRAP CHANNELS IF RIPRAP IS LEFT IN PLACE
   - C. STRIPPING OF VEGETATION WITHIN THE AREAS SHOWN WHERE ABOVE CAP LIGHT-DUTY ACCESS ROADS SHALL BE CONSTRUCTED
   - D. STRIPPING OF VEGETATIVE AREAS IN OTHER AREAS EXCEPT WHERE ABOVE GROUND PIPES EXIST, ACCESS IS LIMITED, OR STRIPPING OPERATIONS MAY DELAY CONSTRUCTION OF THE EVOH GEOMEMBRANE
   - E. MINOR GRADING SHALL BE DONE WHERE REQUIRED TO PROMOTE POSITIVE DRAINAGE
4. MANY OF THE ITEMS SHOWN AS UNDER CONSTRUCTION HAVE BEEN COMPLETED AND AS-BUILT DOCUMENTATION WILL BE SUBMITTED SEPARATELY. (1)

STATE OF MISSOURI
ADAM S. LEVICH
NOTARY PUBLIC
MEMBER
E-28655
CERTIFIED PROFESSIONAL ENGINEER
10/4/13

REV	DATE	DESCRIPTION	DWN BY	DES BY	CHK BY	APP BY
1	10/04/13	RESPONSE TO 09/17/13 MDNR COMMENTS	TAD	JGW	ASL	BOS

DATE OF ISSUE 07/26/13 — DRAWN BY TAD — DESIGNED BY JGW — CHECKED BY BOS — APPROVED BY ASL

CORNERSTONE Environmental Group, LLC

This drawing represents intellectual property of Cornerstone Environmental Group, LLC. Any modification to the original by other than Cornerstone Environmental Group, LLC personnel violates its original purpose and as such is rendered void. Cornerstone Environmental Group, LLC will not be held liable for any changes made to this document without express written consent of the originator.

BRIDGETON LANDFILL, LLC.
BRIDGETON LANDFILL
BRIDGETON, MISSOURI

NORTH QUARRY - EVOH GEOMEMBRANE CAP AND CAP INTEGRITY SYSTEM

CAP SUBGRADE PHASING PLAN - PHASE 1 NORTH

SHEET NO. 4B

PROJECT NO. 130520

1" 1/2" 0" 1"

File: X:\PROJECTS\BRIDGETON (MO)\130520 - NORTH QUARRY CONTINGENCY PLAN_PROJECT DWGS\CAP PLANS\FIG. NQ PHASING.dwg Layout: 04b-phasing User: tthorp Jachpe Oct 04, 2013 - 3:06pm

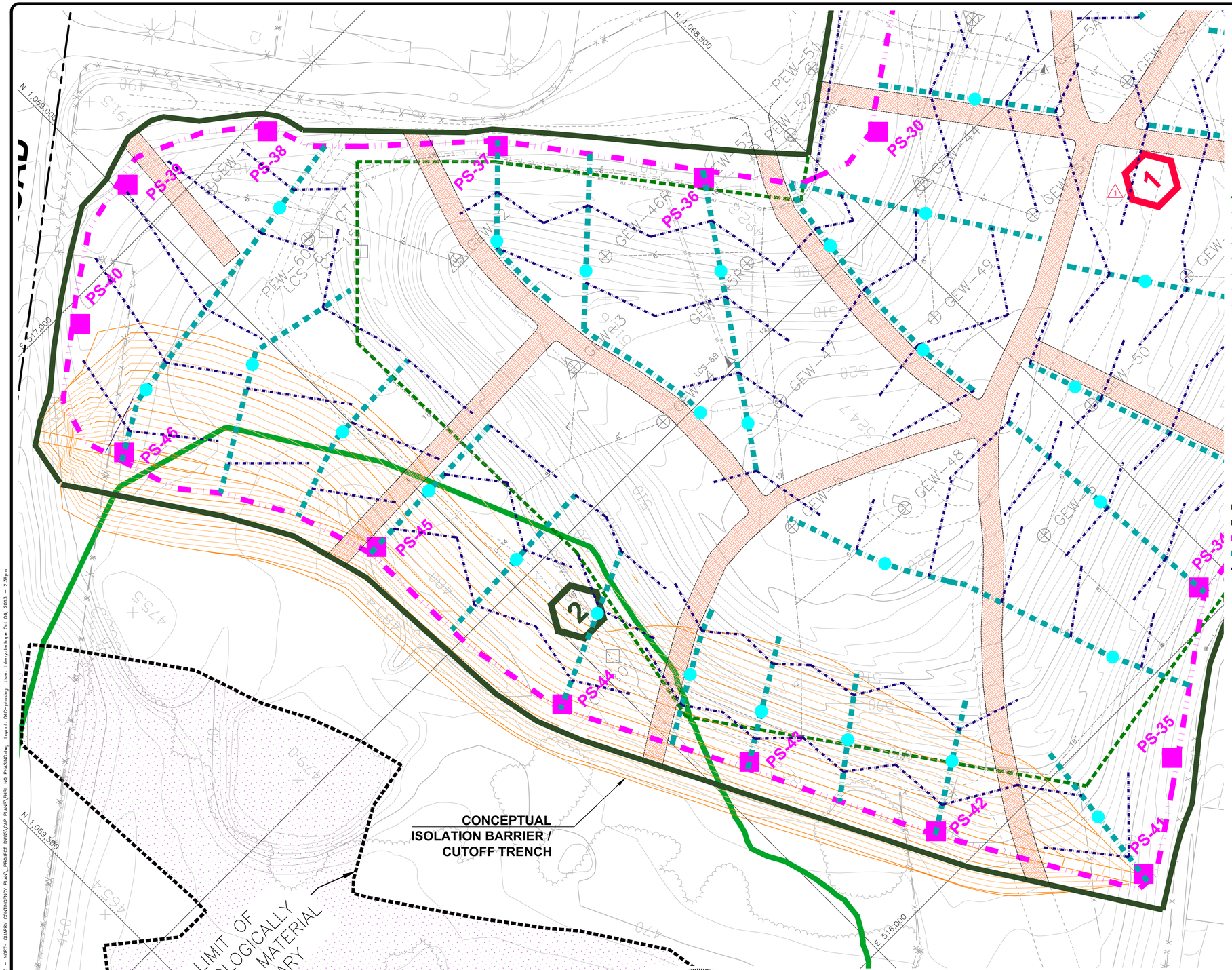

0 50 100

SCALE IN FEET

LEGEND

- SOLID WASTE PERMIT 118912 BOUNDARY
- EXISTING 10' CONTOUR
- EXISTING 2' CONTOUR
- EXISTING LFG HEADER/LATERAL
- EXISTING LEACHATE FORCEMAIN
- EXISTING CONDENSATE DRAIN LINE
- EXISTING AIR LINE
- EXISTING UNDERGROUND ELECTRIC
- EXISTING HDPE GEOMEMBRANE
- SOUTH QUARRY EVOH GEOMEMBRANE (UNDER CONSTRUCTION)
- LIGHT-DUTY ACCESS ROADS (UNDER CONSTRUCTION)
- PROPOSED STRIPPING AREA FOR LIGHT DUTY ACCESS ROAD
- GEW-81 — EXISTING LFG EXTRACTION WELL
- GEW-81 — EXISTING LFG EXTRACTION WELL – COMBO
- PEW-4 — EXISTING LFG PERIMETER EXTRACTION WELL
- CT-1 — EXISTING CONDENSATE PUMP STATION
- TMP-1 — EXISTING TEMPERATURE MONITORING PROBE
- GMP-11 — EXISTING GAS MONITORING PROBE
- IT-3 — EXISTING INTERCEPTION TRENCH WELL
- LCS-5 — LEACHATE COLLECTION SUMP (1)
- PROPOSED CAP LIMIT
- PROPOSED CAP PHASE BOUNDARY
- PROPOSED PERIMETER TOE COLLECTOR (SEE DETAIL 2/8)
- PROPOSED BELOW CAP BERM COLLECTOR (SEE DETAILS 2/10 & 3/10)
- PROPOSED STRIP DRAINS (SEE DETAIL 5/11)
- PS-32 — PROPOSED PERIMETER COLLECTION SUMP (SEE DETAIL 1/8)
- WELLHEAD RISER (SEE DETAIL 3/10)
- CS-1 — PROPOSED CONTAINMENT PUMP STATION (SEE DETAIL 6/11)
- (1) 1 — PROPOSED CAP PHASE DESIGNATION

NOTES:

1. THE 2013 TOPOGRAPHIC MAP WAS PROVIDED BY COOP AERIAL SURVEYORS, CO., PHOENIX, AZ. DATE OF PHOTO: 02/13/2013.
2. UTILITIES SHOWN TAKEN FROM DRAWING 1 OF 1 "SITE INFRASTRUCTURE" BY AQUATERRA ENVIRONMENTAL SOLUTIONS, INC. DATED 09/16/2013. (1)
3. SUBGRADE PREPARATION FOR THE EVOH GEOMEMBRANE CAP SHALL INCLUDE:
   - A. REGRADING OF THE BENCHES PER DETAIL 1, SHEET 11
   - B. INSTALLATION OF AN ADDITIONAL PROTECTIVE GEOTEXTILE OVER RIPRAP AT EXISTING DOWNCHUTE RIPRAP CHANNELS IF RIPRAP IS LEFT IN PLACE
   - C. STRIPPING OF VEGETATION WITHIN THE AREAS SHOWN WHERE ABOVE CAP LIGHT-DUTY ACCESS ROADS SHALL BE CONSTRUCTED
   - D. STRIPPING OF VEGETATIVE AREAS IN OTHER AREAS EXCEPT WHERE ABOVE GROUND PIPES EXIST, ACCESS IS LIMITED, OR STRIPPING OPERATIONS MAY DELAY CONSTRUCTION OF THE EVOH GEOMEMBRANE
   - E. MINOR GRADING SHALL BE DONE WHERE REQUIRED TO PROMOTE POSITIVE DRAINAGE
4. MANY OF THE ITEMS SHOWN AS UNDER CONSTRUCTION HAVE BEEN COMPLETED AND AS-BUILT DOCUMENTATION WILL BE SUBMITTED SEPARATELY. (1)

STATE OF MISSOURI
ADAM JASON LEAR
NUMBER E-29603
REGISTERED PROFESSIONAL ENGINEER
10/4/13

REV	DATE	DESCRIPTION	DWN BY	DES BY	CHK BY	APP BY
1	10/04/13	RESPONSE TO 09/17/13 MDNR COMMENTS	TAD	JGW	ASL	BOS

DATE OF ISSUE 07/26/13 — DRAWN BY TAD — DESIGNED BY JGW — CHECKED BY BOS — APPROVED BY ASL

CORNERSTONE Environmental Group, LLC

This drawing represents intellectual property of Cornerstone Environmental Group, LLC. Any modification to the original by other than Cornerstone Environmental Group, LLC personnel violates the original purpose and as such is rendered void. Cornerstone Environmental Group, LLC will not be held liable for any changes made to this document without express written consent of the originator.

BRIDGETON LANDFILL, LLC.
BRIDGETON LANDFILL
BRIDGETON, MISSOURI

NORTH QUARRY - EVOH GEOMEMBRANE CAP AND CAP INTEGRITY SYSTEM

CAP SUBGRADE PHASING PLAN - PHASE 2

SHEET NO. **4C**

PROJECT NO. 130520

1" 1/2" 0" 1"

File: X:\PROJECTS\BRIDGETON (MO)\130520 - NORTH QUARRY CONTINGENCY PLAN_PROJECT DWGS\CAP PLANS\PHSE 1&2 PHASING.dwg Layout: 04C-phasing User: tthierry Jachson Oct 04, 2013 - 2:39pm

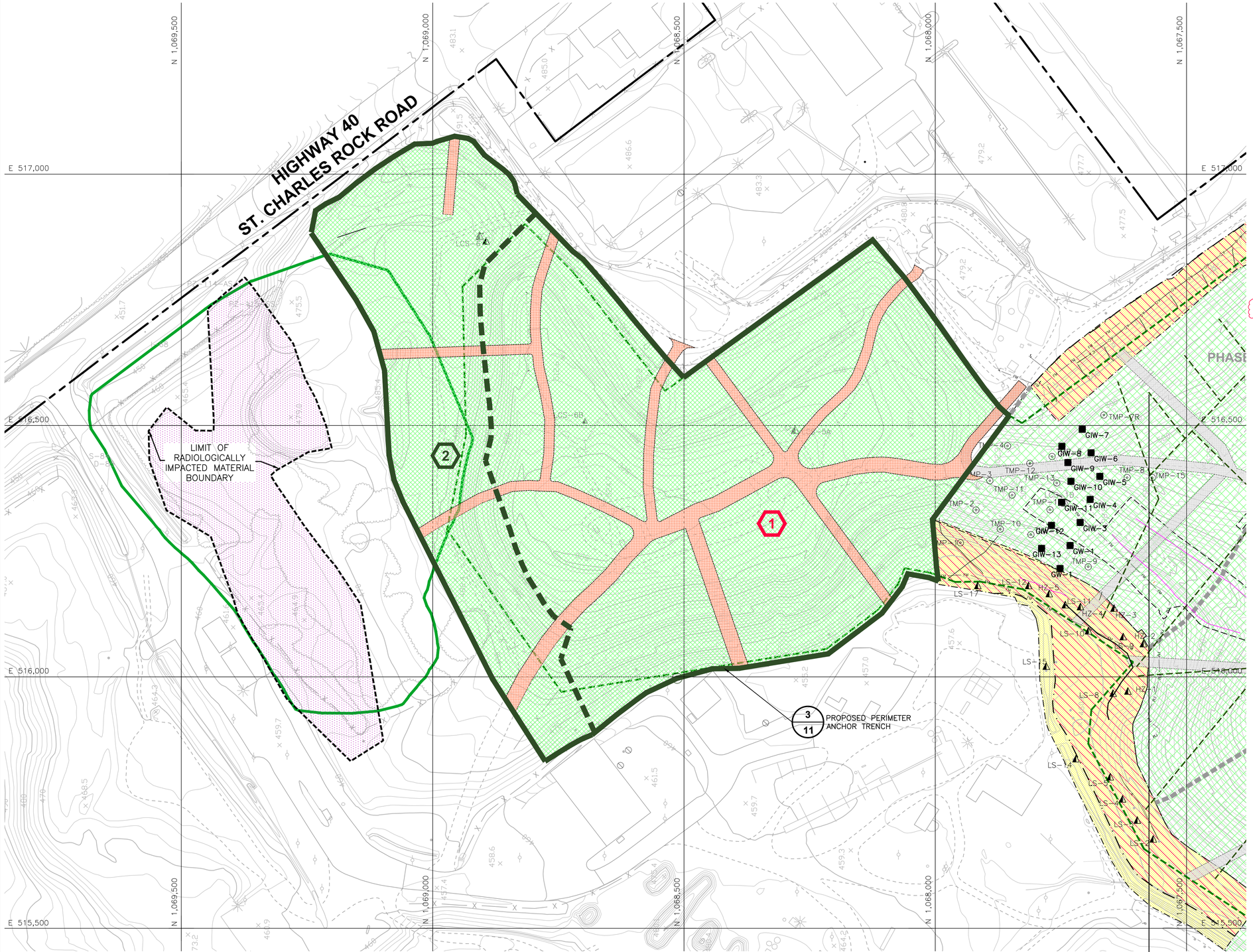

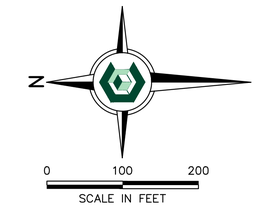

LEGEND

- SOLID WASTE PERMIT 118912 BOUNDARY
- EXISTING 10' CONTOUR
- EXISTING 2' CONTOUR
- GW-7 EXISTING LFG INTERCEPTOR WELL
- EXISTING HDPE GEOMEMBRANE
- EXISTING HDPE GEOMEMBRANE WITH EVOH LINER OVERCAP
- SOUTH QUARRY EVOH GEOMEMBRANE (UNDER CONSTRUCTION)
- PROPOSED NORTH QUARRY EVOH GEOMEMBRANE
- LIGHT-DUTY ACCESS ROADS (UNDER CONSTRUCTION)
- LIGHT-DUTY ACCESS ROADS (SEE DETAIL 1/10)
- LIMIT OF RADIOLOGICALLY IMPACTED MATERIAL BOUNDARY
- OU-1 HAZARDOUS DISPOSAL AREA AS DEFINED BY ROD (LIMIT OF STUDY AREA)
- PROPOSED CAP LIMIT
- PROPOSED CAP PHASE BOUNDARY
- PROPOSED CAP PHASE DESIGNATION

NOTES:

1. THE 2013 TOPOGRAPHIC MAP WAS PROVIDED BY COOP AERIAL SURVEYORS, CO., PHOENIX, AZ. DATE OF PHOTO: 02/13/2013.
2. THE PROPOSED TEMPORARY FINAL CAP GEOMEMBRANE SHALL BE CONTINUOUSLY WELDED TO THE EXISTING GEOMEMBRANE.
3. MANY OF THE ITEMS SHOWN AS UNDER CONSTRUCTION HAVE BEEN COMPLETED AND AS-BUILT DOCUMENTATION WILL BE SUBMITTED SEPARATELY.

STATE OF MISSOURI
ADAM STEVEN LAKEY
NUMBER E-28655
REGISTERED PROFESSIONAL ENGINEER
10/4/13

REV	DATE	DESCRIPTION	DWN BY	DES BY	CHK BY	APP BY
1	10/04/13	RESPONSE TO 09/17/13 MDNR COMMENTS	TAD	JGW	ASL	BOS

DATE OF ISSUE 07/26/13
DRAWN BY TAD
DESIGNED BY JGW
CHECKED BY BOS
APPROVED BY ASL

CORNERSTONE Environmental Group, LLC

This drawing represents intellectual property of Cornerstone Environmental Group, LLC. Any modification to the original by other than Cornerstone Environmental Group, LLC personnel violates its original purpose and as such is rendered void. Cornerstone Environmental Group, LLC will not be held liable for any changes made to this document without express written consent of the originator.

BRIDGETON LANDFILL, LLC.
BRIDGETON LANDFILL
BRIDGETON, MISSOURI

NORTH QUARRY - EVOH GEOMEMBRANE CAP AND CAP INTEGRITY SYSTEM
FINAL CAP PLAN

SHEET NO. 5
PROJECT NO. 130520

File: X:\PROJECTS\BRIDGETON (MO)\130520 - NORTH QUARRY CONTINGENCY PLAN_PROJECT DWGS\CAP PLANS\FHBL NQ CAP.dwg Layout: 05-CAP PLAN User: thierry.dechape Oct 04, 2013 - 2:40pm

HIGHWAY 40
ST. CHARLES ROCK ROAD

QUARRY WALL

SOLID WASTE BOUNDARY

LIMIT OF RADIOLOGICALLY IMPACTED MATERIAL BOUNDARY

QUARRY WALL

SOLID WASTE BOUNDARY

PHASE 2

APEX SUMP

N 1,069,500
N 1,069,000
N 1,068,500
N 1,068,000
N 1,067,500
E 517,000
E 516,500
E 516,000
E 515,500

N

0 100 200
SCALE IN FEET

LEGEND

- SOLID WASTE PERMIT 118912 BOUNDARY
- EXISTING 10' CONTOUR
- EXISTING 2' CONTOUR
- EXISTING LFG HEADER/LATERAL
- EXISTING LEACHATE FORCEMAIN
- EXISTING CONDENSATE DRAIN LINE
- EXISTING AIR LINE
- EXISTING UNDERGROUND ELECTRIC
- LIMIT OF RADIOLOGICALLY IMPACTED MATERIAL BOUNDARY OU-1 HAZARDOUS DISPOSAL AREA AS DEFINED BY ROD (LIMIT OF STUDY AREA)
- EXISTING BUBBLE SUCKER
- EXISTING HDPE GEOMEMBRANE
- EXISTING HDPE GEOMEMBRANE WITH EVOH LINER OVERCAP (1)
- SOUTH QUARRY EVOH GEOMEMBRANE (UNDER CONSTRUCTION)
- LIGHT-DUTY ACCESS ROADS (UNDER CONSTRUCTION)
- PROPOSED STRIPPING AREA FOR LIGHT DUTY ACCESS ROAD
- GEW-81 EXISTING LFG EXTRACTION WELL
- GEW-43R EXISTING LFG EXTRACTION WELL – COMBO
- PEW-4 EXISTING LFG PERIMETER EXTRACTION WELL
- CT-1 EXISTING CONDENSATE PUMP STATION
- TMP-1 EXISTING TEMPERATURE MONITORING PROBE
- GMP-11 EXISTING GAS MONITORING PROBE
- IT-3 EXISTING INTERCEPTION TRENCH WELL
- GIW-10 EXISTING LFG INTERCEPTOR WELL
- PZ-109-SS EXISTING PIEZOMETER
- LCS-5 LEACHATE COLLECTION SUMP (1)
- PROPOSED LFG LATERAL (SEE DETAILS 2/10 AND 3/10)
- PROPOSED BELOW CAP BERM COLLECTOR (SEE DETAILS 2/10 & 3/10)
- PS-07 PROPOSED PERIMETER COLLECTION SUMP (SEE DETAIL 1/8)
- WELLHEAD RISER (36 IN NORTH QUARRY) (1)
- PROPOSED DEFLECTOR PIPE BERM (SEE DETAIL 9/10)
- PROPOSED CULVERT PROTECTION FOR GAS LATERAL
- A&FM A&FM PROPOSED AIR AND FORCEMAIN (SEE NOTE 3, THIS SHEET)
- PROPOSED CAP LIMIT
- PROPOSED CAP PHASE BOUNDARY
- (1) (1) PROPOSED CAP PHASE DESIGNATION

NOTES:

1. THE 2013 TOPOGRAPHIC MAP WAS PROVIDED BY COOP AERIAL SURVEYORS, CO., PHOENIX, AZ. DATE OF PHOTO: 02/13/2013.
2. UTILITIES SHOWN TAKEN FROM DRAWING 1 OF 1 "SITE INFRASTRUCTURE" BY AQUATERRA ENVIRONMENTAL SOLUTIONS, INC. DATED 09/16/13. (1)
3. A NEW DOUBLE-WALLED 3" HDPE SDR 11 / 6" HDPE SDR 17 FORCEMAIN AND 2" AIR MAIN SHALL BE CONSTRUCTED ABOVE THE CAP AROUND THE PERIMETER OF THE NORTH QUARRY AS NECESSARY TO CONVEY LIQUID FROM THE PERIMETER COLLECTION SUMPS AND 2" AIR MAIN (SHOWN IN DETAIL 1, SHEET 8) TO THE LEACHATE MANAGEMENT SYSTEM.
4. ALL OVER LINER TIE IN POINTS, PERIMETER LINE COLLECTION RISERS, AND INTERCEPTION TRENCH WELLS TO BE MAINTAINED AND BOOTED THROUGH THE NEW FML.
5. PROPOSED BELOW CAP BERM COLLECTORS AND EXISTING LANDFILL GAS HEADERS ARE BELOW CAP FEATURES SHOWN FOR CLARITY OF PROPOSED ABOVE CAP LFG LATERALS.
6. PROPOSED ABOVE CAP LFG LATERALS TO CONNECT TO EXISTING BELOW CAP HEADERS. LATERALS TO BE BOOTED TO CAP AT CAP PENETRATION POINT.
7. MANY OF THE ITEMS SHOWN AS UNDER CONSTRUCTION HAVE BEEN COMPLETED AND AS-BUILT DOCUMENTATION WILL BE SUBMITTED SEPARATELY. (1)

STATE OF MISSOURI
ADAM SIEVEN
NOTARY PUBLIC
E-22655
NOTARIZED PROFESSIONAL ENGINEER
10/4/13

REV	DATE	DESCRIPTION	DWN BY	DES BY	CHK BY	APP BY
1	10/04/13	RESPONSE TO 09/17/13 MDNR COMMENTS	TAD	JGW	ASL	BOS

DATE OF ISSUE 07/26/13
DRAWN BY TAD
DESIGNED BY JGW
CHECKED BY BOS
APPROVED BY ASL

CORNERSTONE Environmental Group, LLC

This drawing represents intellectual property of Cornerstone Environmental Group, LLC. Any modification to the original by other than Cornerstone Environmental Group, LLC personnel violates its original purpose and as such is rendered void. Cornerstone Environmental Group, LLC will not be held liable for any changes made to this document without express written consent of the originator.

BRIDGETON LANDFILL, LLC.
BRIDGETON LANDFILL
BRIDGETON, MISSOURI

NORTH QUARRY - EVOH GEOMEMBRANE CAP AND CAP INTEGRITY SYSTEM
CAP INTEGRITY SYSTEM - ABOVE TEMPORARY CAP

SHEET NO. 6
PROJECT NO. 130520

File: X:\PROJECTS\BRIDGETON (MO)\130520 - NORTH QUARRY CONTINGENCY PLAN_PROJECT DWGS\CAP PLANS\FIN8L NO OS-ABOVE.dwg Layout: 06-ABOVE User: thenry,dechape Oct 04, 2013 - 2:41pm

HIGHWAY 40
ST. CHARLES ROCK ROAD

PROPOSED OUTFALL TO BE SUBMITTED TO MDNR'S WATER PROTECTION PROGRAM

TIE–IN TO EXISTING CHANNEL

ENERGY DISSIPATED FOR CONCENTRATED FLOW

LIMIT OF RADIOLOGICALLY IMPACTED MATERIAL BOUNDARY

OUTFALL 001
LANDFILL
CONTAINER STORAGE

PROPOSED NORTHEAST DETENTION BASIN
BOTTOM ELEVATION 479.4
TOP ELEVATION 484.0
2:1 SIDESLOPES

REPLACE EXISTING CULVERT WITH C–11
30 LF 18"ø PE @ 0.67%
UPSTRM INV EL 479.4
DNSTRM INV EL 479.2

PROPOSED DISCHARGE TO BE ROUTED TO PROPOSED NORTH BASIN AND THEN TO REACH OUTFALL 004

REGRADE CHANNEL AT 0.5% SLOPE

DEFLECTOR BERM

DEFLECTOR BERM SEE DETAIL 9/10

ENERGY DISSIPATED FOR CONCENTRATED FLOW. SEE DETAIL 1/13

TIE–IN TO EXISTING CHANNEL

EXISTING WEST DRAINAGE CHANNEL

PROPOSED NORTH DETENTION BASIN DESIGN (FROM SOUTH QUARRY PLANS)

EXISTING DETENTION BASIN

PROPOSED DISCHARGE CULVERT TO EXISTING DETENTION BASIN

N2-NE1 N1B-E N1B-S2 N1B-N2 N1B-N1 N2-NW1 N1B-W1 N1B-W2 N2-NW2 N1A-E N1A-S N1A-W C-1 C-2 C-3 C-4 C-5 C-6 C-7 C-8 C-9 C-10 N1B-S1

N 1,969,500 N 1,969,000 N 1,968,500 N 1,968,000 N 1,967,500
E 517,000 E 516,500 E 516,000 E 515,500

0 100 200
SCALE IN FEET

LEGEND

- SOLID WASTE PERMIT 118912 BOUNDARY
- DRAINAGE AREA BOUNDARY
- EXISTING 10' CONTOUR
- EXISTING 2' CONTOUR
- EXISTING HDPE GEOMEMBRANE
- EXISTING HDPE GEOMEMBRANE WITH EVOH LINER OVERCAP (1)
- SOUTH QUARRY EVOH GEOMEMBRANE (UNDER CONSTRUCTION)
- LIGHT–DUTY ACCESS ROADS (UNDER CONSTRUCTION)
- PROPOSED LIGHT–DUTY ACCESS ROADS
- N1A-E — DRAINAGE SUB–AREA DESIGNATION
- N1A–E — PROPOSED DRAINAGE CHANNEL
- EXISTING DRAINAGE CHANNEL
- PROPOSED CULVERT (SEE SHEET 13)
- SHEET FLOW DIRECTION ARROW
- OUTFALL 001 (SEE NOTE 2) (1)
- 1 — PROPOSED CAP PHASE DESIGNATION

NOTES:

1. THE 2013 TOPOGRAPHIC MAP WAS PROVIDED BY COOP AERIAL SURVEYORS, CO., PHOENIX, AZ. DATE OF PHOTO: 02/13/2013.
2. SEE SHEET 1 FOR LOCATIONS OF PERMITTED OUTFALLS AND SOUTH QUARRY DETENTION BASINS.
3. MANY OF THE ITEMS SHOWN AS UNDER CONSTRUCTION HAVE BEEN COMPLETED AND AS–BUILT DOCUMENTATION WILL BE SUBMITTED SEPARATELY.

(1)

BRIDGETON NORTH QUARRY CAP STORMWATER SUMMARY

SUBAREA	DRAINAGE AREA (ACRES)	SUBAREA PEAK FLOW (CFS)	DISCHARGE OUTFALL	DRAINAGE CHANNEL DESIGN							
				CHANNEL PEAK FLOW (CFS)1	DEPTH (FT)	LEFT SIDESLOPE X:1 HOR	BOTTOM WIDTH (FT)	RIGHT SIDESLOPE X:1 HOR	CHANNEL SLOPE (%)	CHANNEL VELOCITY (FT/SEC)	CHANNEL LINING
N1A-E	2.25	**18.4**	004	18.4	1.50	1.00	3.00	1.00	0.20	2.78	GRASSED
N1A-S	2.00	18.60	004	31.7	2.00	1.00	3.00	1.00	0.20	3.28	GRASSED
N1B-N1	0.86	8.60	003	**8.5**	1.50	5.00	0.00	4.00	6.70	11.0	GEOMEMBRANE
N1B-W2	0.93	9.30	003	**9.0**	1.00	1.00	3.00	1.00	0.50	2.58	GRASSED
N1B-W1	2.52	25.20	003	38.3	2.00	1.50	5.00	1.50	0.21	2.63	GRASSED
N1A-W	1.85	18.20	003	53.4	2.00	2.00	5.00	2.00	0.30	3.15	GRASSED
N1B-N2	0.94	9.40	004	**9.3**	1.50	5.00	0.00	4.00	**7.80**	11.90	GEOMEMBRANE
N1B-E	0.61	6.10	004	11.8	1.50	5.00	0.00	4.00	**2.00**	7.60	GEOMEMBRANE
N1B-S23	2.25	22.30	004	**18.7**	**2.00**	**2.00**	3.00	**2.00**	**1.00**	**3.77**	GRASSED
N1B-S1	0.83	22.50	004	DRAINS TO CULVERT C-10 WITHOUT CHANNEL							GRASSED
N2-NW12	2.73	27.3	**007**	24.1	2.00	**2.00**	**3.00**	2.00	0.50	**3.14**	GRASSED
N2-NW12				23.9	1.50	**1.00**	**3.00**	**1.00**	8.00	6.37	GRASSED
N2-NE1	2.93	29.30	**PROPOSED**	30.7	2.00	2.00	3.00	2.00	**0.50**	**3.55**	GRASSED
N2-NE2	0.39	3.90	**PROPOSED**	SHEET FLOWS							
TOTAL	21.09										

NOTES:
1. REPORTED AT DOWNSTREAM END OF CHANNEL
2. CONTAINS 2 DRAINAGE CHANNEL SEGMENTS, N2-NW1 AND N2-NW2.
3. N1B-S2 SUBAREA DRAINS TO C-7, C-8, C-9; CHANNEL DESIGN BASED ON N1B-W2
4. CHANNEL FLOWS ARE LESS THAN SUBAREA FLOWS IN SOME CASES DUE TO STORAGE EFFECTS FROM STORMWATER ROUTING

STATE OF MISSOURI
ADAM GWIN
NUMBER E-28605
REGISTERED PROFESSIONAL ENGINEER
10/4/13

REV	DATE	DESCRIPTION	DWN BY	DES BY	CHK BY	APP BY
1	10/04/13	RESPONSE TO 09/17/13 MDNR COMMENTS	TAD	JGW	ASL	BOS

DATE OF ISSUE 07/26/13
DRAWN BY TAD
DESIGNED BY JGW
CHECKED BY BOS
APPROVED BY ASL

CORNERSTONE Environmental Group, LLC

This drawing represents intellectual property of Cornerstone Environmental Group, LLC. Any modification to the original by other than Cornerstone Environmental Group, LLC personnel violates its original purpose and as such is rendered void. Cornerstone Environmental Group, LLC will not be held liable for any changes made to this document without express written consent of the originator.

BRIDGETON LANDFILL, LLC.
BRIDGETON LANDFILL
BRIDGETON, MISSOURI
NORTH QUARRY - EVOH GEOMEMBRANE CAP AND CAP INTEGRITY SYSTEM
STORMWATER MANAGEMENT PLAN

SHEET NO. 7
PROJECT NO. 130520

File: X:\PROJECTS\BRIDGETON (MO)\130520 - NORTH QUARRY CONTINGENCY PLAN_PROJECT DWGS\CAP PLANS\THEL NO SWMP.dwg Layout: 07-STORMWATER User: thierry.dechope Oct 04, 2013 - 2:41pm

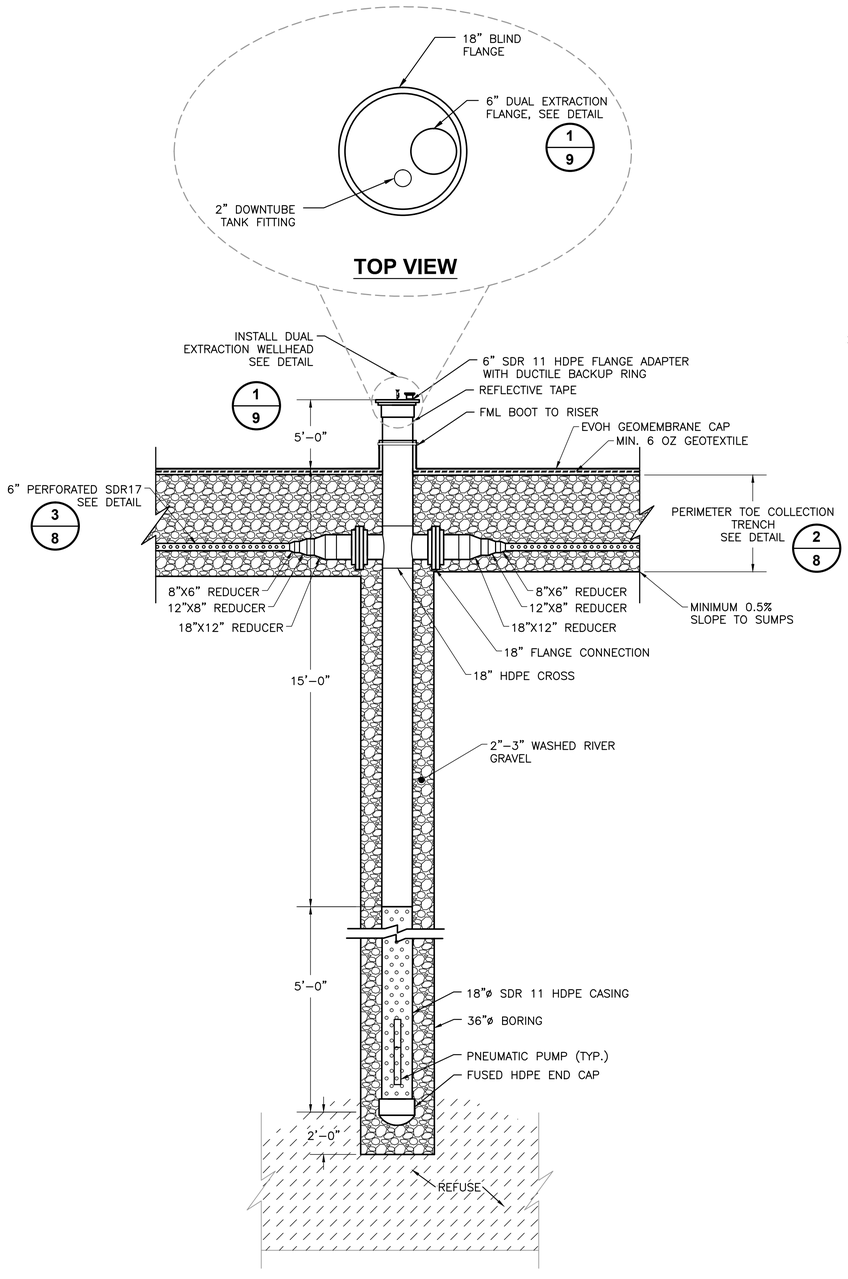

PERIMETER COLLECTION SUMP

DETAIL 1/8

SCALE: NOT TO SCALE

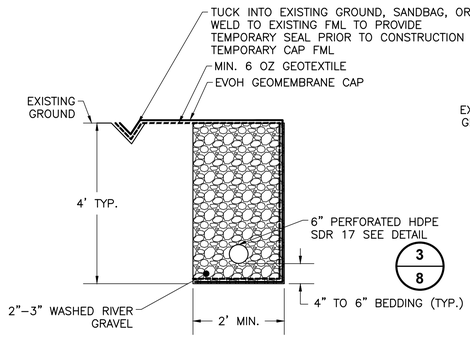

TEMPORARY CONFIGURATION DURING CONSTRUCTION

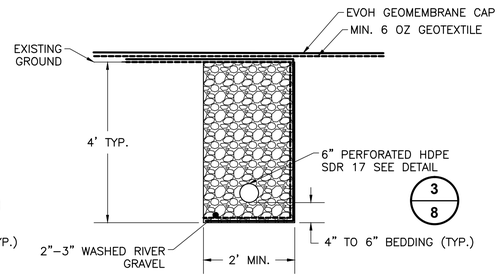

COMPLETED CONSTRUCTION

PERIMETER TOE COLLECTION TRENCH

DETAIL 2/8

SCALE: NOT TO SCALE

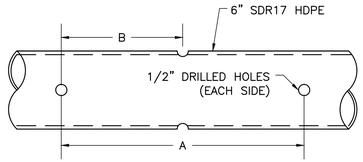

NOTES:

1. A=20"
   B=10"
   90° ROTATION BETWEEN ROWS
2. ALTERNATE PATTERN MAY BE USED WITH APPROVAL OF ENGINEER.

PERIMETER TOE COLLECTION PIPE

DETAIL 3/8

SCALE: NOT TO SCALE

△1

PERIMETER COLLECTION SUMP SCHEDULE			
SUMP	NORTHING	EASTING	APPROXIMATE GROUND LEVEL
PS-26	1067912.07	516512.23	493.6
PS-27	1068002.35	516624.93	495.6
PS-28	1068136.54	516772.00	495.6
PS-29	1068281.95	516671.32	496.0
PS-30	1068437.09	516563.37	495.5
PS-31	1068013.43	516220.52	461.3
PS-32	1068160.46	516118.92	461.4
PS-33	1068270.12	516058.79	462.9
PS-34	1068529.67	516029.34	468.7
PS-35	1068665.27	515930.42	463.7
PS-36	1068588.30	516651.31	490.3
PS-37	1068708.59	516815.05	487.6
PS-38	1068856.96	516983.82	484.5
PS-39	1068989.81	517043.42	481.8
PS-40	1069118.38	516980.39	478.6
PS-41	1068764.78	515870.04	467.0
PS-42	1068878.26	516042.11	479.3
PS-43	1068958.99	516218.39	482.1
PS-44	1069048.08	516386.82	478.8
PS-45	1069067.66	516622.87	482.3
PS-46	1069176.45	516861.67	469.8

STATE OF MISSOURI
ADAM S. LEVEN
NUMBER E-29655
REGISTERED PROFESSIONAL ENGINEER

10/4/13

REV	DATE	DESCRIPTION	DWN BY	DES BY	CHK BY	APP BY
1	10/04/13	RESPONSE TO 09/17/13 MDNR COMMENTS	TAD	JGW	ASL	BOS

DATE OF ISSUE 07/26/13
DRAWN BY TAD
DESIGNED BY JGW
CHECKED BY BOS
APPROVED BY ASL

CORNERSTONE Environmental Group, LLC

This drawing represents intellectual property of Cornerstone Environmental Group, LLC. Any modification to the original by other than Cornerstone Environmental Group, LLC personnel violates its original purpose and as such is rendered void. Cornerstone Environmental Group, LLC will not be held liable for any changes made to this document without express written consent of the originator.

BRIDGETON LANDFILL, LLC.
BRIDGETON LANDFILL
BRIDGETON, MISSOURI

NORTH QUARRY - EVOH GEOMEMBRANE CAP AND CAP INTEGRITY SYSTEM

DETAILS

SHEET NO. **8**

PROJECT NO. 130520

File: N:\PROJECTS\BRIDGETON (MO)\130520 - NORTH QUARRY CONTINGENCY PLAN_PROJECT DWGS\CAP PLANS\FINAL NQ DETS.dwg Layout: 08-DETAILS User: kferry Jennings Oct 04, 2013 - 3:31pm

1" 1/2" 0" 1"

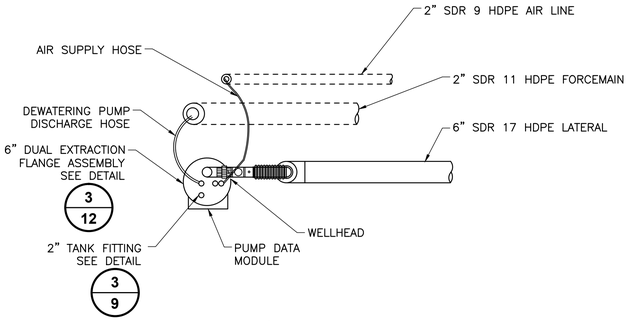

TOP VIEW

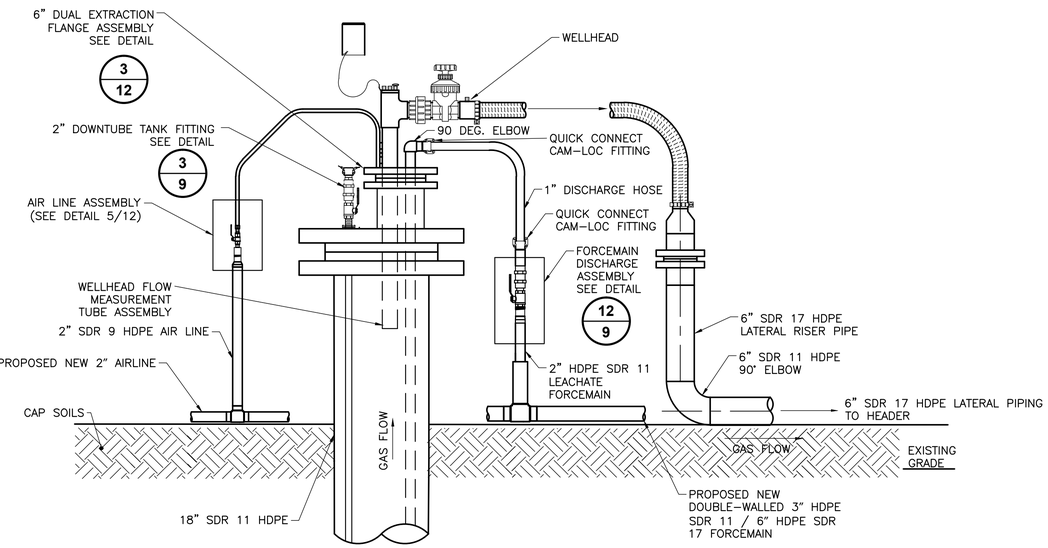

PROFILE VIEW
COLLECTION SUMP

DETAIL 1/9
SCALE: NOT TO SCALE

NOTES:

1. CONTRACTOR TO UTILIZE OWNER-APPROVED WELLHEAD ASSEMBLY. CONTRACTOR TO OBTAIN OWNER PREFERENCE FOR WELLHEAD ASSEMBLY.
2. PROVIDE HIGH VISIBILITY TAPE OR PAINT AROUND TOP 1-FOOT OF WELL CASING AND LATERAL PIPE.
3. AIR AND FORCEMAIN RISERS TO BE INSTALLED TO WITHIN 2' FROM SUMP.

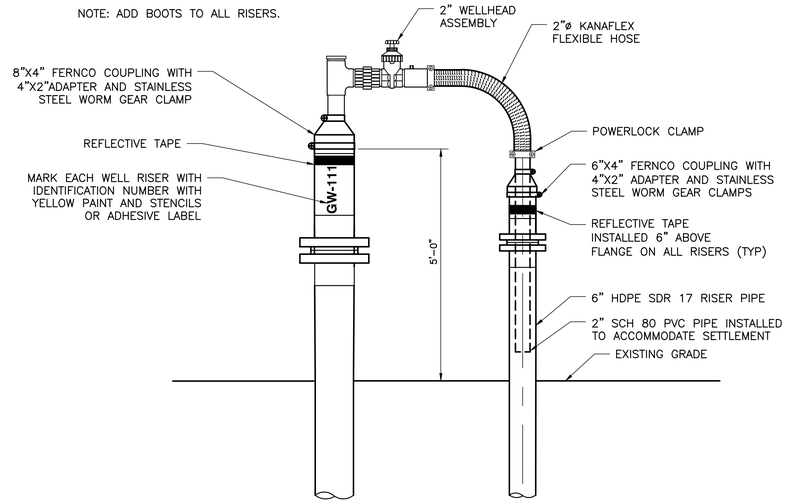

WELLHEAD

DETAIL 2/9
SCALE: NOT TO SCALE

NOTES:

1. CONTRACTOR TO UTILIZE OWNER-APPROVED WELLHEAD ASSEMBLY. CONTRACTOR TO OBTAIN OWNER PREFERENCE FOR WELLHEAD ASSEMBLY.
2. PROVIDE HIGH VISIBILITY TAPE OR PAINT AROUND TOP 1-FOOT OF WELL CASING AND LATERAL PIPE.
3. CONTRACTOR TO INSURE DRAINAGE OF SURFACE WATER AWAY FROM THE WELLHEAD.
4. LATERAL PIPING MUST DRAIN TO THE MAIN HEADER, AWAY FROM THE WELLHEAD, AT A MINIMUM SLOPE OF 3%.

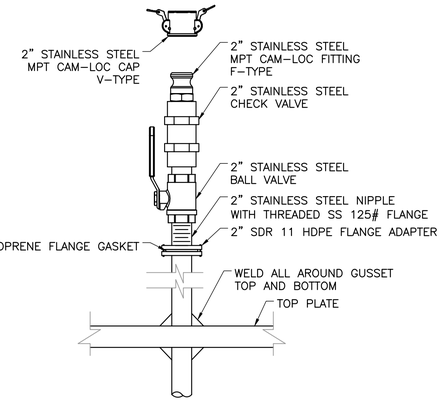

2" DOWNTUBE TANK FITTING

DETAIL 3/9
SCALE: NOT TO SCALE

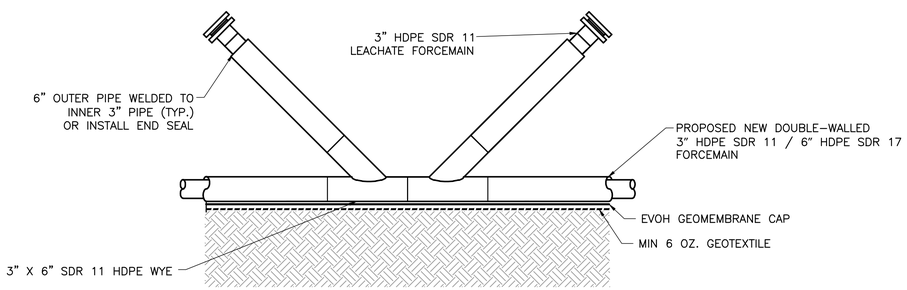

FORCEMAIN CLEANOUT RISERS

DETAIL 4/9
SCALE: NOT TO SCALE

STATE OF MISSOURI
ADAM S. LUCKEY
NUMBER E-29655
REGISTERED PROFESSIONAL ENGINEER
10/4/13

REV	DATE	DESCRIPTION	DWN BY	DES BY	CHK BY	APP BY

DATE OF ISSUE 07/26/13
DRAWN BY TAD
DESIGNED BY JGW
CHECKED BY BOS
APPROVED BY ASL

CORNERSTONE Environmental Group, LLC

This drawing represents intellectual property of Cornerstone Environmental Group, LLC. Any modification to the original by other than Cornerstone Environmental Group, LLC personnel violates its originally purpose and as such is rendered void. Cornerstone Environmental Group, LLC will not be held liable for any changes made to this document without express written consent of the originator.

BRIDGETON LANDFILL, LLC.
BRIDGETON LANDFILL
BRIDGETON, MISSOURI
NORTH QUARRY - EVOH GEOMEMBRANE CAP AND CAP INTEGRITY SYSTEM
DETAILS

SHEET NO. 9
PROJECT NO. 130520

File: K:\PROJECTS\BRIDGETON (MO)\130520 - NORTH QUARRY CONTINGENCY PLAN_PROJECT FILES\CAP PLANS\FINAL NQ DETS.dwg Layout: 09 - DETAILS User: hkenny-dechaine Oct 04, 2013 - 3:31pm

1" 1/2" 0" 1"

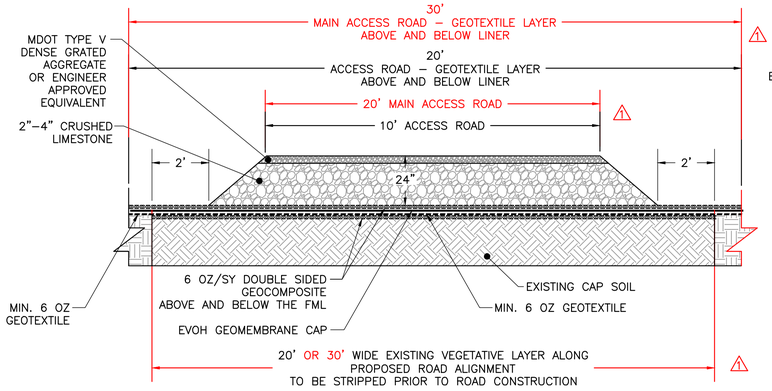

LIGHT-DUTY ACCESS ROAD

DETAIL 1/10
SCALE: NOT TO SCALE

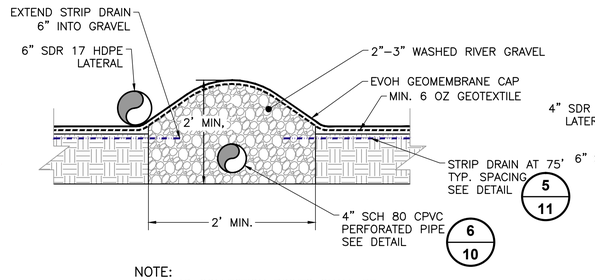

NOTE:
WELLHEAD COLLECTION POINTS SHALL BE INSTALLED AT MAXIMUM 500' SPACING

TEMPORARY CAP INTEGRITY BERM COLLECTOR

DETAIL 2/10
SCALE: NOT TO SCALE

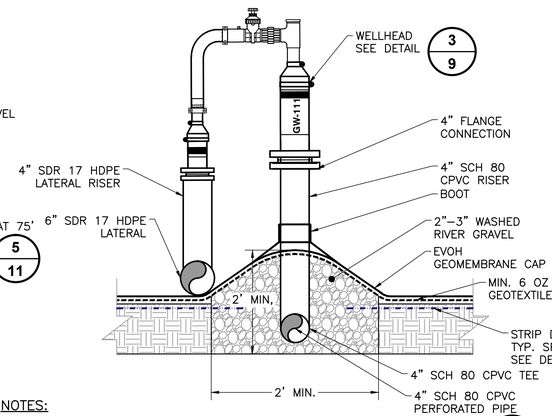

NOTES:

1. WELLHEAD COLLECTION POINTS SHALL BE INSTALLED AT MAXIMUM 500' SPACING.
2. SEE SHEET 5 FOR TEMPORARY CAP LINER TERMINATION LOCATIONS.

TEMPORARY CAP INTEGRITY BERM COLLECTOR WITH RISER

DETAIL 3/10
SCALE: NOT TO SCALE

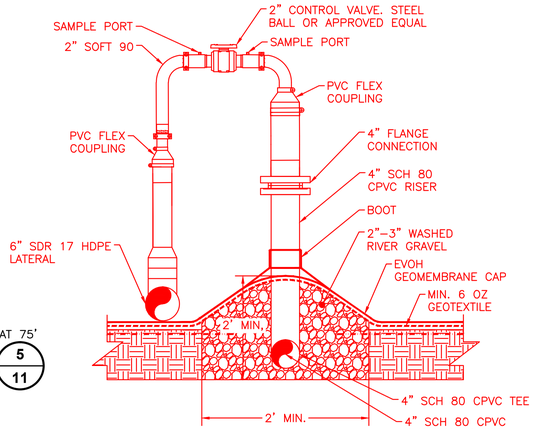

ALTERNATE
TEMPORARY CAP INTEGRITY BERM COLLECTOR WITH RISER

DETAIL 3A/10
SCALE: NOT TO SCALE

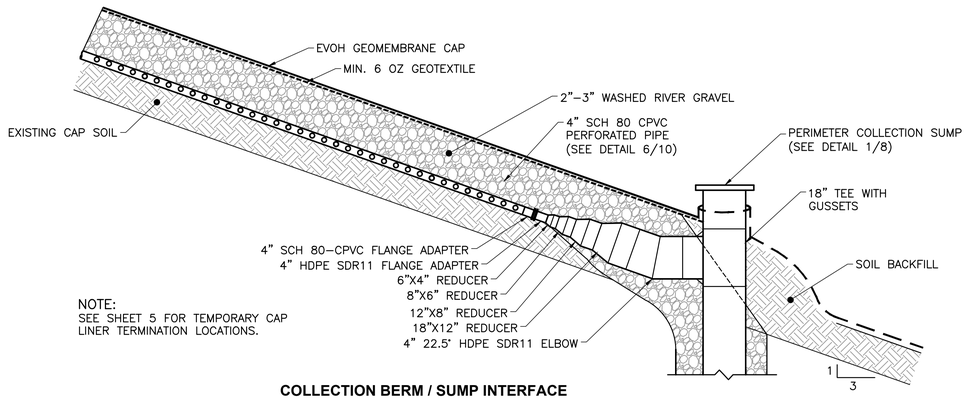

NOTE:
SEE SHEET 5 FOR TEMPORARY CAP LINER TERMINATION LOCATIONS.

COLLECTION BERM / SUMP INTERFACE

DETAIL 4/10
SCALE: NOT TO SCALE

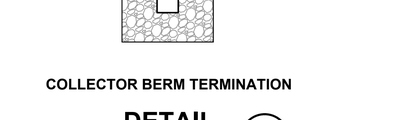

COLLECTOR BERM TERMINATION

DETAIL 5/10
SCALE: NOT TO SCALE

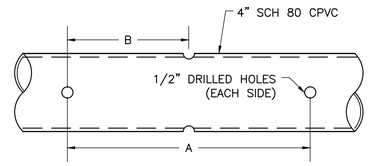

NOTES:

1. A=20"
   B=10"
   90° ROTATION BETWEEN ROWS
2. ALTERNATE PATTERN MAY BE USED WITH APPROVAL OF EM.

HORIZONTAL COLLECTION PIPE

DETAIL 6/10
SCALE: NOT TO SCALE

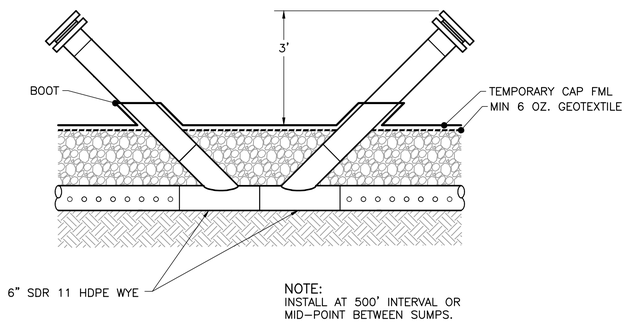

NOTE:
INSTALL AT 500' INTERVAL OR MID–POINT BETWEEN SUMPS.

PERIMETER COLLECTOR TRENCH CLEANOUT RISERS

DETAIL 7/10
SCALE: NOT TO SCALE

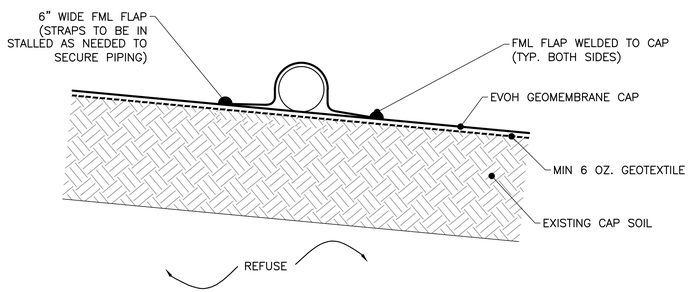

ABOVE CAP PIPE ANCHOR

DETAIL 8/10
SCALE: NOT TO SCALE

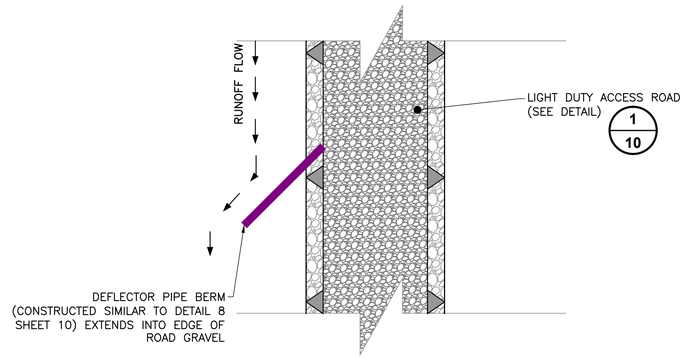

DEFLECTOR PIPE BERM

DETAIL 9/10
SCALE: NOT TO SCALE

STATE OF MISSOURI
ADAM S. LEVEN
NOTARY PUBLIC
NUMBER
E-22605
REGISTERED PROFESSIONAL ENGINEER
10/4/13

REV	DATE	DESCRIPTION	DWN BY	DES BY	CHK BY	APP BY
1	10/04/13	RESPONSE TO 09/17/13 MDNR COMMENTS	TSS	JGW	ASL	BOS

DATE OF ISSUE 07/26/13
DRAWN BY TAD
DESIGNED BY JGW
CHECKED BY BOS
APPROVED BY ASL

CORNERSTONE Environmental Group, LLC

This drawing represents intellectual property of Cornerstone Environmental Group, LLC. Any modification to the original by other than Cornerstone Environmental Group, LLC personnel violates its original purpose and as such is rendered void. Cornerstone Environmental Group, LLC will not be held liable for any changes made to this document without express written consent of the originator.

BRIDGETON LANDFILL, LLC.
BRIDGETON LANDFILL
BRIDGETON, MISSOURI
NORTH QUARRY - EVOH GEOMEMBRANE CAP AND CAP INTEGRITY SYSTEM
DETAILS

SHEET NO. **10**
PROJECT NO. 130520

File: X:\PROJECTS\BRIDGETON (MO)\130520 - NORTH QUARRY CONTINGENCY PLAN_PROJECT DWGS\CAP PLANS\FINAL NQ SETS.dwg Layout: 10 - DETAILS User: thierry.dehaye Oct 04, 2013 - 3:31pm

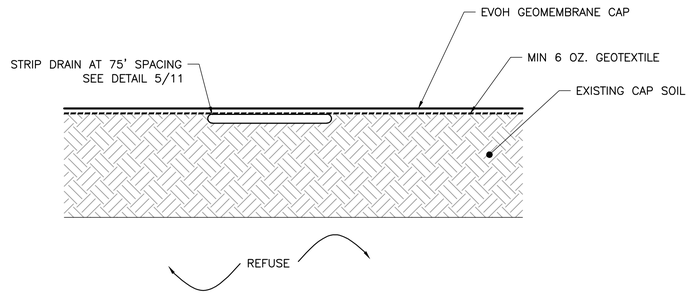

TYPICAL EVOH GEOMEMBRANE CAP

DETAIL 1/11
SCALE: NOT TO SCALE

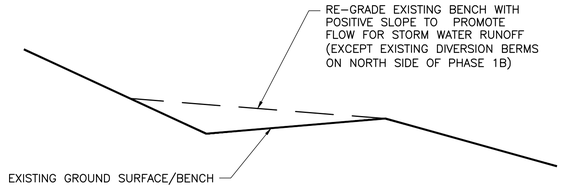

EXISTING BENCH RE-GRADE

DETAIL 2/11
SCALE: NOT TO SCALE

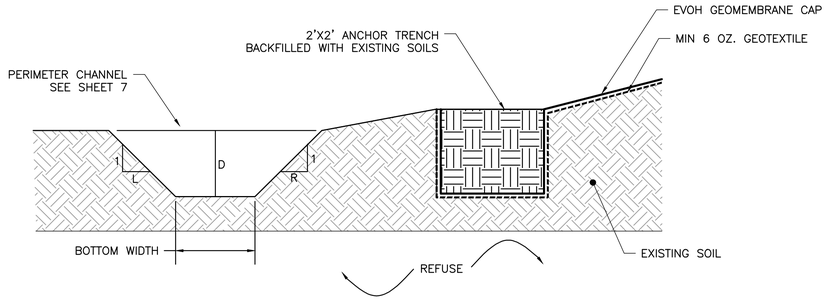

ALTERNATE 1 EVOH GEOMEMBRANE CAP TERMINATION

DETAIL 3/11
SCALE: NOT TO SCALE

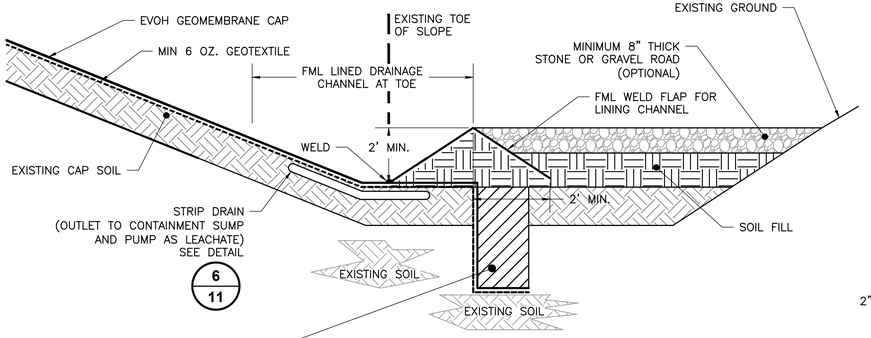

ALTERNATE 2
EVOH GEOMEMBRANE CAP TERMINATION

DETAIL 4/11
SCALE: NOT TO SCALE

NOTES:

1. ALTERNATE 1 LINER TERMINATION DETAIL IS TO BE USED FOR THE TYPICAL LINER TERMINATION.
2. ALTERNATE 2 LINER TERMINATION DETAIL IS PROVIDED FOR USE AT LOCATIONS WHERE A PERIMETER CHANNEL MAY NEED TO BE BUILT UP ON THE LOWER EDGE OF CAP (DUE TO UNDULATING TOPOGRAPHY) TO ACHIEVE POSITIVE DRAINAGE SLOPE FOR THE PERIMETER CHANNEL.

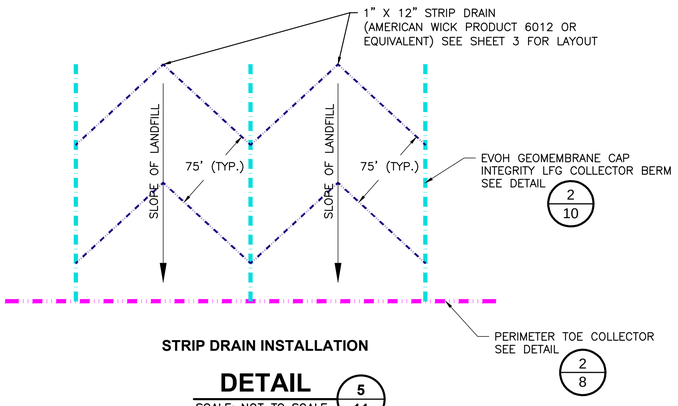

STRIP DRAIN INSTALLATION

DETAIL 5/11
SCALE: NOT TO SCALE

CONTAINMENT SUMP PUMP STATION
FOR TOE STRIP DRAIN

DETAIL 6/11
SCALE: NOT TO SCALE

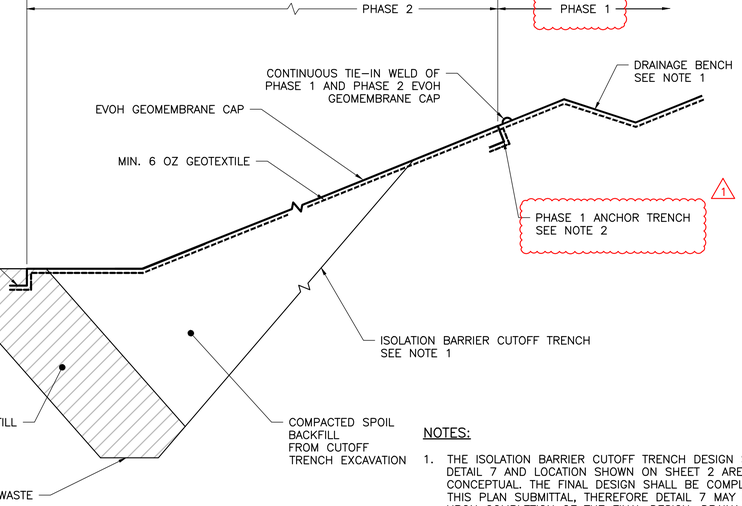

PHASE 1B/PHASE 2
TYPICAL CROSS SECTION

DETAIL 7/11
SCALE: NOT TO SCALE

NOTES:

1. THE ISOLATION BARRIER CUTOFF TRENCH DESIGN SHOWN IN DETAIL 7 AND LOCATION SHOWN ON SHEET 2 ARE CONCEPTUAL. THE FINAL DESIGN SHALL BE COMPLETED AFTER THIS PLAN SUBMITTAL, THEREFORE DETAIL 7 MAY BE REVISED UPON COMPLETION OF THE FINAL DESIGN. DRAINAGE BENCHES HAVE BEEN DESIGNED UP SLOPE OF THE ISOLATION BARRIER CUTOFF TRENCH EXCAVATION TO COLLECT AND DIVERT STORM WATER AWAY FROM THE TRENCH EXCAVATION LIMIT. THE DRAINAGE BENCH IS DESIGNED WITH A 1.5 FOOT DEPTH AND BENCH SLOPE OF 6H : 1V. LOCATIONS OF THE DRAINAGE BENCH SHALL BE FINALIZED AFTER FINAL DESIGN OF THE ISOLATION BARRIER CUTOFF TRENCH.
2. THE PHASE 2 EVOH GEOMEMBRANE CAP SHALL BE CONTINUOUSLY WELDED TO THE PHASE 1 EVOH GEOMEMBRANE CAP. THE PHASE 1 ANCHOR TRENCH SHALL BE LEFT IN PLACE AND THE NEW EVOH GEOMEMBRANE FOR PHASE 2 OVERLAPPED OVER THE PHASE 1 EVOH GEOMEMBRANE AND THEN WELDED CONTINUOUSLY.

STATE OF MISSOURI
ADAM STEVEN LACH
NOTARY PUBLIC
E-28555
10/4/13

REV	DATE	DESCRIPTION	DWN BY	DES BY	CHK BY	APP BY
1	10/04/13	RESPONSE TO 09/17/13 MDNR COMMENTS	TAD	JGW	ASL	BOS

DATE OF ISSUE 07/26/13
DRAWN BY TAD
DESIGNED BY JGW
CHECKED BY BOS
APPROVED BY ASL

CORNERSTONE Environmental Group, LLC

This drawing represents intellectual property of Cornerstone Environmental Group, LLC. Any modification to the original by other than Cornerstone Environmental Group, LLC personnel violates its original purpose and as such is rendered void. Cornerstone Environmental Group, LLC will not be held liable for any changes made to this document without express written consent of the originator.

BRIDGETON LANDFILL, LLC.
BRIDGETON LANDFILL
BRIDGETON, MISSOURI

NORTH QUARRY - EVOH GEOMEMBRANE CAP AND CAP INTEGRITY SYSTEM
DETAILS

SHEET NO. 11
PROJECT NO. 130520

1" 1/2" 0" 1"

File: X:\PROJECTS\BRIDGETON (MO)\130520 - NORTH QUARRY CONTINGENCY PLAN_PROJECT FILES\CAP PLANS\FINAL NQ DETS.dwg Layout: 11 - DETAILS User: Harry.Aldridge Oct 04, 2013 - 3:35pm

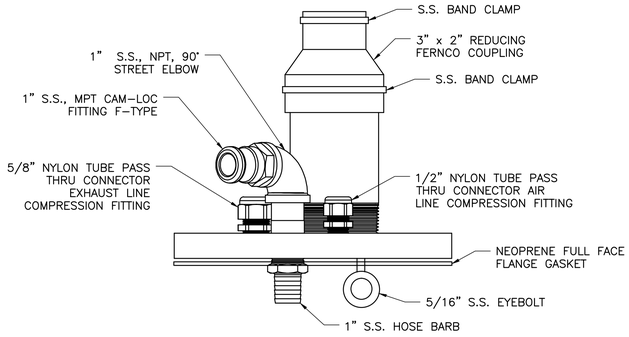

SIDE VIEW

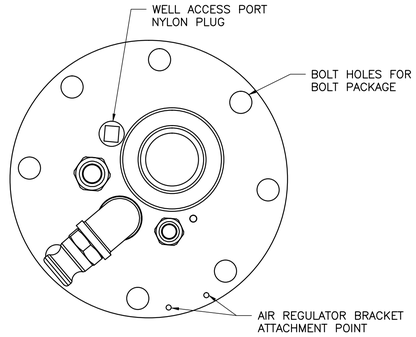

PLAN VIEW

DUAL EXTRACTION FLANGE COMPONENTS

DETAIL 1/12
SCALE: NOT TO SCALE

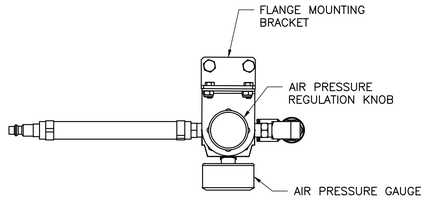

PLAN VIEW

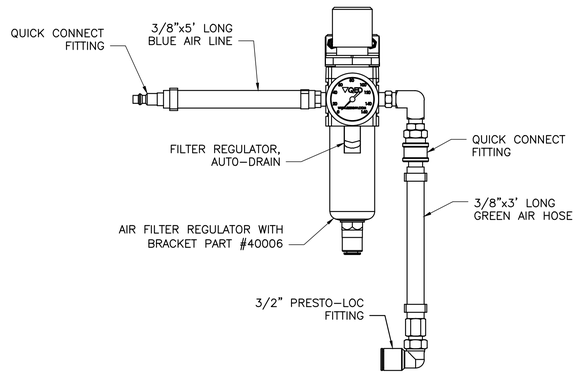

SIDE VIEW

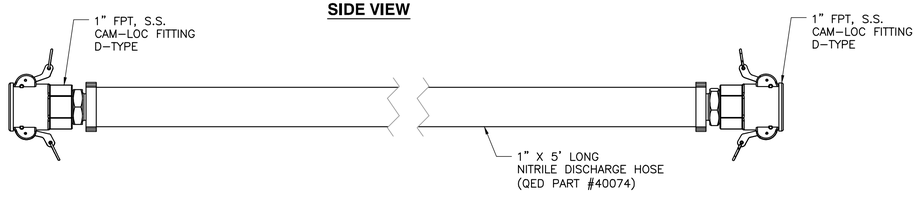

DUAL EXTRACTION WELL AIR REGULATOR AND DISCHARGE LINE

DETAIL 2/12
SCALE: NOT TO SCALE

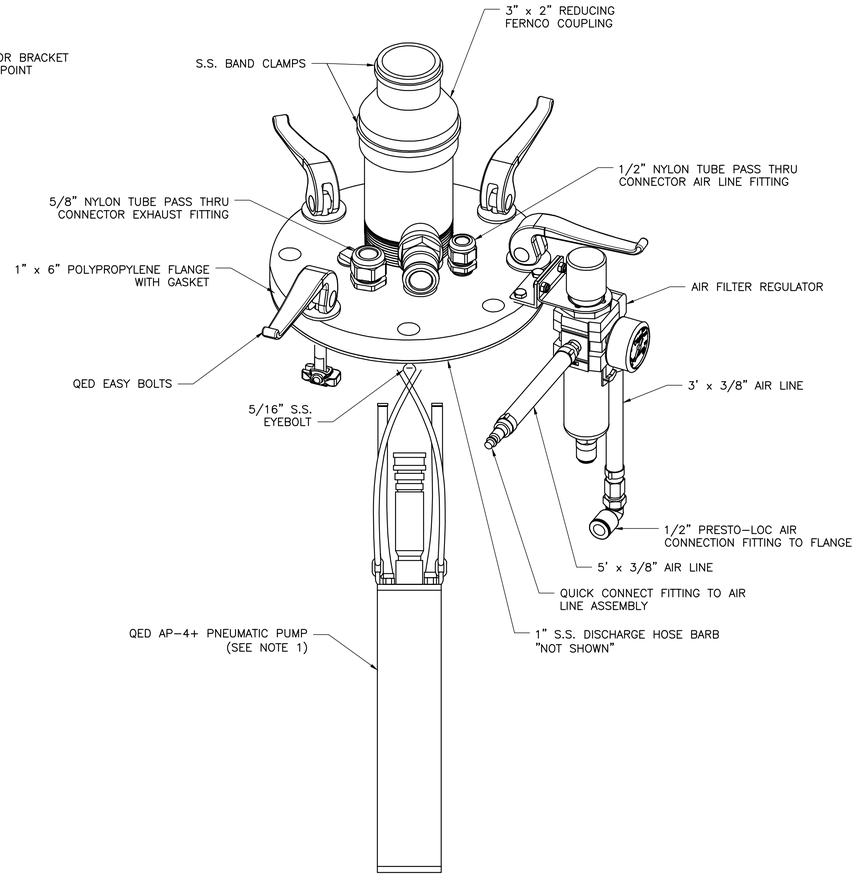

CONDENSATE EXTRACTION FLANGE ASSEMBLY (COLD CLIMATE PACKAGE)

DETAIL 3/12
SCALE: NOT TO SCALE

NOTES:

1. QED AP-4+ PNEUMATIC PUMP SHOWN FOR REFERENCE PURPOSES ONLY. PUMP IS NOT INCLUDED WITH FLANGE PACKAGE.
2. AIR LINE AND FORCE MAIN ASSEMBLIES TO BE CONFIGURED FOR COLD CLIMATES.
3. PUMP TO BE SET 1-FT OFF THE BOTTOM OF THE SUMP.
4. PUMP EXHAUST PORTS TO BE FITTED WITH THROTTLING NEEDLE VALVE.

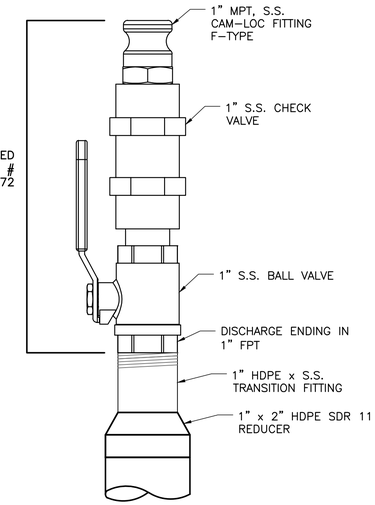

PUMP DISCHARGE ASSEMBLY

DETAIL 4/12
SCALE: NOT TO SCALE

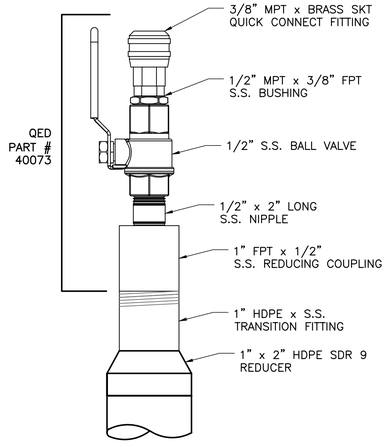

AIR SUPPLY LINE VALVE

DETAIL 5/12
SCALE: NOT TO SCALE

STATE OF MISSOURI
ADAM STEVEN LANE
NUMBER E-28665
REGISTERED PROFESSIONAL ENGINEER
10/4/13

REV	DATE	DESCRIPTION	DWN BY	DES BY	CHK BY	APP BY

DATE OF ISSUE 07/26/13
DRAWN BY TAD
DESIGNED BY JGW
CHECKED BY BOS
APPROVED BY ASL

CORNERSTONE Environmental Group, LLC

This drawing represents intellectual property of Cornerstone Environmental Group, LLC. Any modification to the original by other than Cornerstone Environmental Group, LLC personnel violates its original purpose and as such is rendered void. Cornerstone Environmental Group, LLC will not be held liable for any changes made to this document without express written consent of the originator.

BRIDGETON LANDFILL, LLC.
BRIDGETON LANDFILL
BRIDGETON, MISSOURI
NORTH QUARRY - EVOH GEOMEMBRANE CAP AND CAP INTEGRITY SYSTEM
DETAILS

SHEET NO. 12
PROJECT NO. 130520

1" 1/2" 0" 1"

File: X:\PROJECTS\BRIDGETON (MO)\130520 - NORTH QUARRY CONTINGENCY PLAN_PROJECT DWGS\CAP PLANS\VHBL NO DETS.dwg Layout: 12 - DETAILS User: tHarry.dechope Oct 04, 2013 - 3:30pm

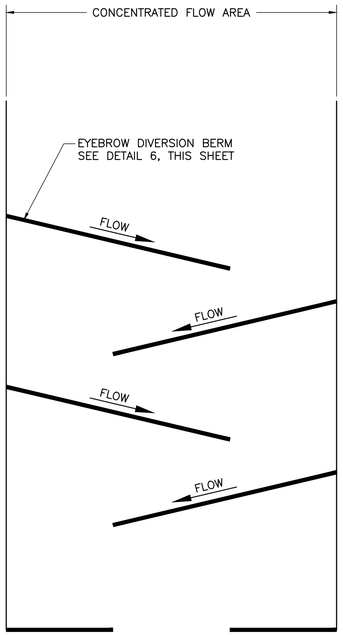

ENERGY DISSIPATER FOR CONCENTRATED FLOW AREAS

DETAIL 1/13 — SCALE: NOT TO SCALE

NOTE:

THIS DETAIL MAY BE USED WHERE CONCENTRATED FLOW IS OBSERVED UPON CONSTRUCTION OF EVOH GEOMEMBRANE CAP TO DISSIPATE FLOW.

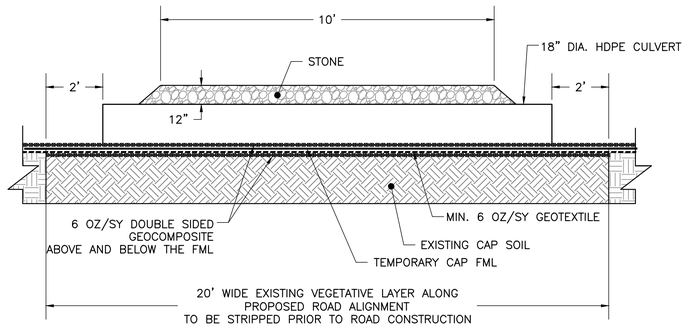

CULVERT CROSSING AT LIGHT-DUTY ACCESS ROAD

DETAIL 2/13 — SCALE: NOT TO SCALE

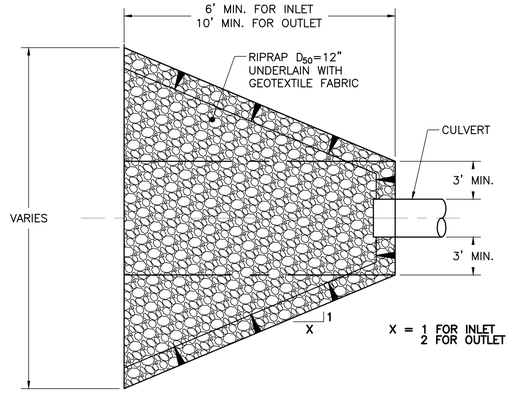

CULVERT INLET/OUTLET PROTECTION

DETAIL 4/13 — SCALE: NOT TO SCALE

NOTE:

SEE CULVERT SCHEDULE FOR APPLICABLE CULVERTS.

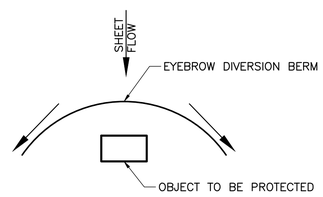

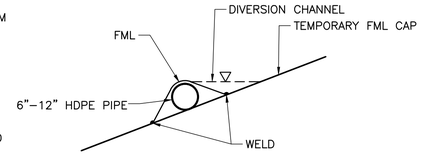

EYEBROW DIVERSION BERM

DETAIL 3/13 — SCALE: NOT TO SCALE

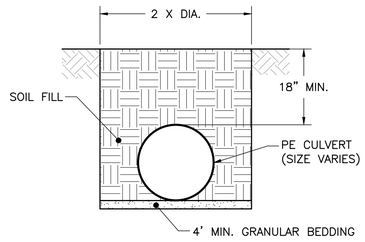

TYPICAL CULVERT

DETAIL 5/13 — SCALE: NOT TO SCALE

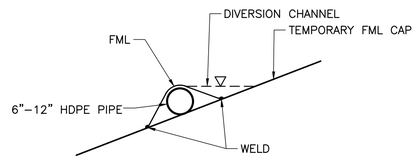

ENERGY DISSIPATOR DIVERSION BERM

DETAIL 6/13 — SCALE: NOT TO SCALE

1

CULVERT SCHEDULE

CULVERT #	TYPE	DIAMETER (IN)	"LENGTH (FT)"	"INLET ELEV. "	"OUTLET ELEV. "	"SLOPE (%)"	INLET PROTECTION	OUTLET PROTECTION
C-1	PE	24.000	80.000	FF	FF	1.80	Y	Y
C-2	PE	24.000	30.000	FF	FF	0.60	Y	Y
C-3	PE	18.000	30.000	FF	FF	1.00	N	N
C-4	PE	18.000	30.000	FF	FF	1.00	N	N
C-5	PE	18.000	30.000	FF	FF	1.00	N	N
C-6	PE	18.000	30.000	FF	FF	1.00	N	Y
C-7	PE	18.000	30.000	FF	FF	1.00	N	Y
C-8	PE	18.000	30.000	FF	FF	1.00	N	Y
C-9	PE	18.000	30.000	FF	FF	1.00	Y	Y
C-10	PE	18.000	30.000	FF	FF	1.00	Y	Y
C-11	PE	18.000	30.000	479.40	479.20	0.67	Y	Y

NOTES:

1. PE CULVERTS TO HAVE SMOOTH INTERIOR WALL.
2. FF = FIELD FIT TO OBTAIN DESIGN SLOPE

STATE OF MISSOURI — ADAM L. SEXTON — NUMBER E-29655 — REGISTERED PROFESSIONAL ENGINEER

10/4/13

REV	DATE	DESCRIPTION	DWN BY	DES BY	CHK BY	APP BY
1	10/04/13	RESPONSE TO 09/17/13 MDNR COMMENTS	TAD	JGW	ASL	BOS

DATE OF ISSUE 07/26/13 — DRAWN BY TAD — DESIGNED BY JGW — CHECKED BY BOS — APPROVED BY ASL

CORNERSTONE Environmental Group, LLC

This drawing represents intellectual property of Cornerstone Environmental Group, LLC. Any modification to the original by other than Cornerstone Environmental Group, LLC personnel violates its original purpose and as such is rendered void. Cornerstone Environmental Group, LLC will not be held liable for any changes made to this document without express written consent of the originator.

BRIDGETON LANDFILL, LLC.
BRIDGETON LANDFILL
BRIDGETON, MISSOURI
NORTH QUARRY - EVOH GEOMEMBRANE CAP AND CAP INTEGRITY SYSTEM
DETAILS

SHEET NO. 13
PROJECT NO. 130520

1" 1/2" 0"

File: X:\PROJECTS\BRIDGETON (MO)\130520 - NORTH QUARRY CONTINGENCY PLAN_PROJECT FILES\CAP PLANS\FINAL NQ DETS.dwg Layout: 13 - DETAILS User: hkenyon Archive Oct 04, 2013 - 3:09pm

APPENDIX C

LANDFILL GAS COLLECTION AND CONTROL SYSTEM EVALUATION

LANDFILL GAS COLLECTION AND CONTROL SYSTEM EVALUATION

BRIDGETON LANDFILL – NORTH QUARRY AREA

BRIDGETON, MISSOURI

Prepared for

Bridgeton Landfill, LLC
July 26, 2013
Revised October 6, 2013
Revised November 4, 2013

Prepared by
CORNERSTONE Environmental Group, LLC
400 Quadrangle Drive, Suite E
Bolingbrook, Illinois 60440
130557

Landfill Gas Collection and Control System Evaluation
Bridgeton Landfill - North Quarry Area
Bridgeton, Missouri

The material and data in this report were prepared under the supervision and direction of the undersigned.

Cornerstone Environmental Group, LLC

Thomas A. Bilgri, P.E.
Manager - LFG Engineering Services

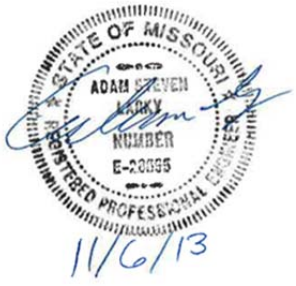

Adam Larky, P.E.
Certifying Engineer

TABLE OF CONTENTS

EXECUTIVE SUMMARY 1

1 INTRODUCTION **1-1**

2 WASTE MASS ASSESSMENT **2-1**

2.1 WASTE COMPOSITION 2-1
2.2 WASTE INTAKE 2-1
2.2.1 Historical Intake Rates *2-1*
2.2.2 Future Intake Rates *2-2*
2.3 LANDFILL COVER 2-3

3 LFG RECOVERY PROJECTIONS **3-1**

3.1 LANDFILL GAS MODELING BASIS 3-1
3.2 LFG MODELING PROJECTIONS 3-2
3.2.1 Existing Conditions – North Quarry *3-3*
3.2.3 Potential SSE Conditions - North Quarry *3-5*

4 EXISTING WELLFIELD INTEGRITY **4-1**

4.1 HEADER AND LATERAL NETWORK 4-1
4.2 WELLFIELD DATA 4-1
4.2.1 Good quality wells *4-1*
4.2.2 Poor quality wells *4-1*
4.2.3 Available vacuum assessment *4-1*
4.2.4 Existing Header Sizing *4-2*
4.2.5 Liquid level assessment *4-2*
4.3 WELL SPACING 4-2
4.4 MATERIAL EVALUATION 4-3
4.5 OVERALL WELLFIELD – CURRENT CONDITIONS 4-3

5 RECOMMENDED MODIFICATIONS FOR POTENTIAL SSE ~~(IF TRIGGERED)~~ **5-1**

5.1 EXTRACTION WELL REPLACEMENT 5-1
5.2 ADDITIONAL EXTRACTION WELLS 5-1
5.3 WELLFIELD PUMPS 5-2
5.4 HEADER PIPE MODIFICATIONS 5-2
5.5 FLARE CAPACITY 5-3

LIMITATIONS **1**

APPENDICES .....

APPENDIX A WELLFIELD DATA

APPENDIX B LANDGEM MODELS

APPENDIX C CONSTRUCTION PLAN FOR ~~CONTINGENT~~ NORTH QUARRY ENHANCED GAS COLLECTION AND CONTROL SYSTEM (GCCS)

TABLE OF CONTENTS (Continued)

APPENDIX D DESIGN CALCULATIONS

APPENDIX E TREND ANALYSES

EXECUTIVE SUMMARY

The Bridgeton Landfill South Quarry area is experiencing a subsurface smoldering event (SSE). The North Quarry Area is not exhibiting symptoms of an SSE. Cornerstone Environmental Group, LLC (CEG) has been requested to undertake an evaluation of the existing landfill gas (LFG) collection and control system in the North Quarry and to make recommendations for the following conditions:

- Determine if the existing gas collection and control system (GCCS) is adequate for the current conditions and that it can continue to be operated in a manner that prevents oxygen intrusion due to overdraw, and

- If monitoring (described in a separate document) determines that certain triggers have been achieved that require capping and enhancement of the GCCS, the existing GCCS must be enhanced to be able to collect gas and perform adequately under the conditions of a potential SSE in the North Quarry.

The existing GCCS is operating well. ~~generally operating satisfactorily, considering its current status as a "flare only" landfill gas collection and control system. It is believed that the~~ The existing system can be operated in a manner consistent with requirements for LFG control and ~~that it~~ can ~~continue to~~ be operated in a manner that prevents oxygen intrusion due to overdraw without any additional enhancements.

Bridgeton Landfill has elected to modify the North Quarry GCCS as if the area were experiencing an SSE – it currently is not demonstrating signs of an SSE. ~~In the event that temporary capping and enhancement of the GCCS is triggered due to a potential SSE in the North Quarry, there~~ There are several items that ~~would~~ specifically require enhancement, including:

- Replacement of certain existing gas extraction wells to accommodate operations in an elevated temperature environment;

- Installation of supplemental gas extraction wells to accommodate anticipated additional gas volume due to an SSE;

- Expanded header capacity in certain areas; and

- Modifications to the ~~gas~~ flare facility infrastructure.

A summary of the findings and recommendations is provided in detail in **Section 5** of the evaluation.

1 INTRODUCTION

The Bridgeton Landfill is located at 13570 St. Charles Rock Road, Bridgeton, Missouri. The North Quarry includes approximately ~~3.64~~ 3.5 million cubic yards (cyds) of waste materials, primarily deposited into an excavated limestone quarry. This portion of the site reportedly began disposal operations in the ~~mid-1950's~~ 1979 and continued until approximately ~~1990~~ 2004. ~~Minor areas of waste placement reportedly occurred after 1990, however documentation of the volume of waste placed during this time period is not currently available.~~ A review of historic aerial photos indicates all portions of the North Quarry were under were final soil cover and vegetated prior to March 31, 2004 (US Geologic Survey aerial photo).

Figure 1 – Site Location

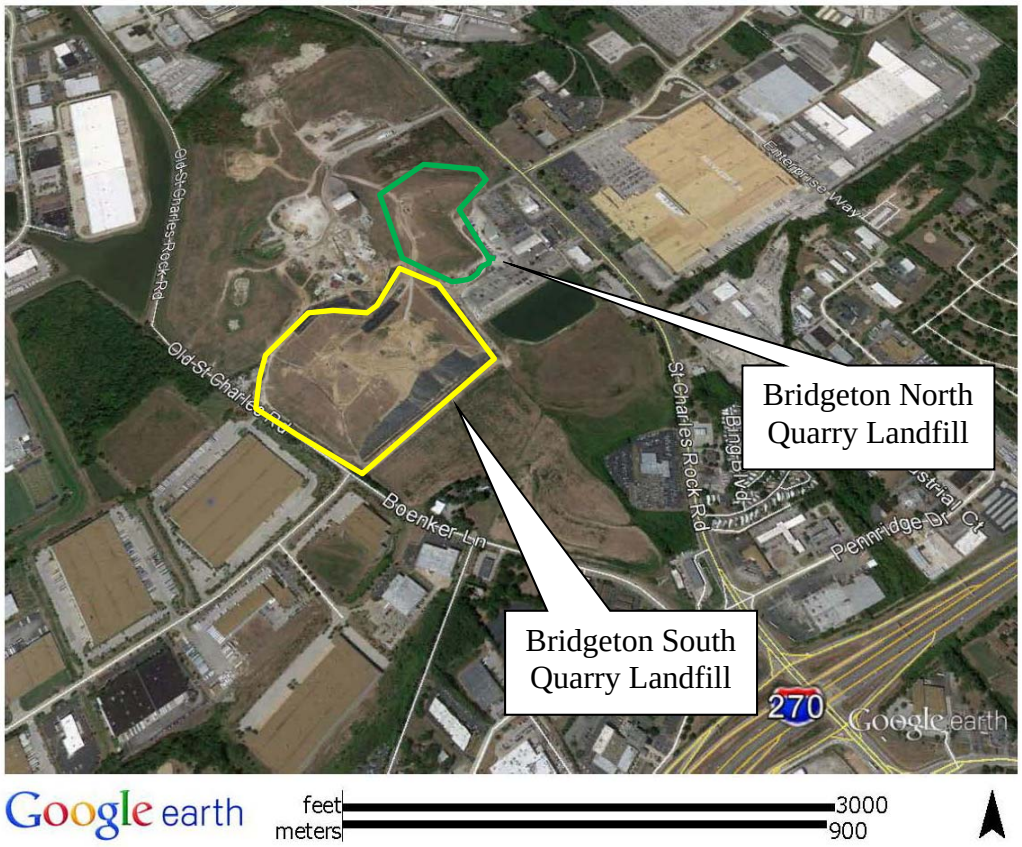

The existing GCCS has been constructed in all portions of the disposal area and consists ~~generally~~ of vertical extraction wells, a buried HDPE header and lateral system and a

condensate management system. LFG extracted from the North Quarry GCCS is disposed of coincidentally with LFG extracted from the South Quarry GCCS at the Flare Station.

The North Quarry disposal area will be capped by installing a composite geomembrane cover system and a Cap Integrity System over the existing soil cover. Please refer to **Appendix C, Sheet No. 1** for the Existing Site Conditions. Please refer to the *Construction Plans for the North Quarry – EVOH Geomembrane Cap and Cap Integrity System, modified October 2013*, prepared by Cornerstone Environmental Group, LLC.

2 WASTE MASS ASSESSMENT

2.1 Waste Composition

The waste composition is largely municipal solid waste (MSW). It is anticipated that some industrial and inert wastes were deposited in this area, however for purposes of LFG modeling and this evaluation, all waste materials are assumed to be putrescible.

2.2 Waste Intake

2.2.1 Historical Intake Rates

Historical waste intakes were provided by site personnel and previous reports by others. Although year-year records of waste placement are not readily available, select milestones can be determined based upon the referenced reports:

- 1979 – Waste placement begins in the North Quarry under Permit #118906
- 1980 – Operations expanded under Permit #118909
- 1985 – Waste placement begins in the South Quarry under Permit #118912
- 2009 – The GCCS Design Plan was updated by Aquaterra. An estimation of total LFG production, utilizing the USEPA Landfill Gas Emissions Model (LandGEM) was provided in that update, including estimated annual waste intakes.

Excerpts from these sources have been compiled to generate an approximation of historical waste intake relative to the North and South Quarry Areas. It is estimated that approximately 3.5 million cubic yards (cyds) were deposited in the North Quarry while approximately 12.5 million cyds were deposited in the South Quarry over the operational life of this facility. An overall waste density of approximately 1,629 lbs/cyd (0.815 ton/cyd) was calculated by comparing the mass included in the LandGEM to the volumetric projection compiled in 1995.

A summary of this approximation is provided below; the LandGEM projections (output files) are provided in **Appendix B**. Please note that the format of the output files is not user-adjustable. On a volumetric basis, the LandGEM projection of methane and carbon dioxide is identical, assuming a 50% methane – 50% carbon dioxide composition of the generated gas stream (LandGEM default setting). As such, the curve represented in the LandGEM graphics (Cubic Meters per Year and User Specified Unit) for carbon dioxide also represents methane. The methane curve is overlain graphically by the carbon dioxide curve, and thus not visible under these conditions. Note that the methane curve is visible in the mass rate graphic (Megagrams per Year) since the unit weights of methane and carbon dioxide are different.

Table 1
Historical Waste Intake Approximation

Year	North Quarry (cyds)	South Quarry (cyds)	Volume Summary (cyds)
1979	174,661		174,661
1980	175,029		349,691
1981	173,860		523,551
1982	303,146		826,697
1983	303,146		1,129,843
1984	303,146		1,432,989
1985		303,146	1,736,135
1986		625,842	2,361,977
1987		625,842	2,987,818
1988		625,842	3,613,660
1989		497,360	4,111,020
1990		771,022	4,882,042
1991		543,926	5,425,968
1992		561,795	5,987,763
1993		560,494	6,548,258
1994		567,387	7,115,644
1995	186,593	624,681	7,926,918
1996	208,627	698,449	8,833,994
1997	233,558	781,913	9,849,465
1998	233,814	782,770	10,866,049
1999	266,571	892,433	12,025,053
2000	280,313	938,439	13,243,805
2001	324,483	1,086,312	14,654,600
2002	195,849	655,667	15,506,115
2003	48,494	162,348	15,716,957
2004	70,909	237,391	16,025,258

~~Historical waste intakes were provided by site personnel and previous reports by others. It is estimated that waste placement was initiated in the mid-1950's and was largely complete prior to 1990. An isopach developed from the recorded bottom of waste elevations to the current surface topography indicates that there is approximately 3.64 million cubic yards of airspace available in this part of the disposal area. Assuming an in-place density of 1,600 pounds per cubic yard (lbs/cyd), a total mass of approximately 3 million tons can be inferred.~~

~~For purposes of this evaluation, the total waste mass was averaged across the reported operating period – approximately 1955 through 1989 – to generate an annual waste intake rate.~~

2.2.2 Future Intake Rates

The landfill ~~This area~~ is "closed" and no future waste receipts are currently anticipated.

2.3 Landfill Cover

The cover system for the North Quarry was delineated in the *Waste Limits Investigation Summary Report, Bridgeton Landfill, LLC, July 2011*, prepared by Aquaterra. This report noted at least two to three feet of soil cover and a hardy stand of vegetation across the cover area. Recent observations of this area indicate that the vegetative cover is still hardy, with no signs of environmental stress or erosion. ~~Soil cover is currently in place over the entire disposal area.~~ The design for a supplemental composite cover system is currently being developed, consisting of low-permeability soils and a synthetic cover component. Please refer to the *Construction Plans for the North Quarry – EVOH Geomembrane Cap and Cap Integrity System, modified October 2013*, prepared by Cornerstone Environmental Group, LLC.

The presence of a sealed, well-functioning final cover system can be a tremendous benefit to long-term, effective LFG management. The maintenance of the cover system and the corresponding interface with the GCCS is a critical component to minimize the potential for air intrusion as well as to minimize the potential for surficial emissions of LFG.

3 LFG RECOVERY PROJECTIONS

3.1 Landfill Gas Modeling Basis

The LFG generation and recovery model projections reflect the currently permitted disposal area and status of operations, and provide a long-term view of future LFG generation and recovery potentials.

Landfill gas generation projections have been made utilizing the USEPA's Landfill Gas Emission Model (LandGEM) V3.02. LandGEM is based on a first-order decomposition rate equation for quantifying emissions from the decomposition of land filled waste in municipal solid waste (MSW) landfills. The model provides a relatively simple approach to estimating landfill gas emissions. Model defaults are based on empirical data from U.S. landfills. Field test data can also be used in place of model defaults when available. Further guidance on EPA test methods, Clean Air Act (CAA) regulations, and other guidance regarding landfill gas emissions and control technology requirements can be found at http://www.epa.gov/ttnatw01/landfill/landflpg.html.

First Order Decomposition Rate Equation

$$Q_{CH_4} = \sum_{i=1}^{n} \sum_{j=0.1}^{1} kL_0 \left[\frac{M_i}{10}\right](e^{-kt_{ij}})$$

Where:

- Q_{CH4} = annual methane generation in the year of the calculation *(m^3/year*)
- i = 1-year time increment
- n = (year of the calculation) – (initial year of waste acceptance)
- j = 0.1-year time increment
- k = methane generation rate (*$year^{-1}$*)
- M_i = mass of waste accepted in the ith year (*Mg*)
- t_{ij} = age of the jth section of waste mass M_i accepted in the i^{th}year (*decimal years*, e.g., 3.2 years)
- L_o = potential methane generation capacity (*m^3/Mg*)

LandGEM is considered a screening tool — the better the input data, the better the estimates. Often, there are limitations with the available data regarding waste quantity and composition, variation in design and operating practices over time, and changes occurring over time that impact the emissions potential. Changes to landfill operation, such as operating under wet conditions through leachate recirculation or other liquid additions, will result in generating more gas at a faster rate.

In addition to the waste mass inputs, there are two variables within this equation – *k* and L_0. These factors vary based upon refuse types and the moisture of the waste mass. The USEPA provides the following guidance on these factors in their *Compilation of Air Pollutant Emission Factors, Section 2.4 (AP-42)*:

Scenario	*k value*	*L_0 value*
• *NSPS Compliance*	*0.05/yr*	*170 m^3/Mg*
• *Typical Landfills*	*0.04/yr*	*100 m^3/Mg*
• *Arid Landfills*	*0.02/yr*	*100 m^3/Mg*

Notes: 1. Arid Sites are considered those receiving less than 635 mm/year (25"/yr) of precipitation.

2. The variables noted above are typical for estimating LFG generation rates, not recovery rates

The values noted above are considered baseline defaults and may or may not reflect actual conditions at a given facility. While appropriate for regulatory screening and assessment purposes, these defaults may under-predict or over-predict actual conditions based upon the moisture content, waste characteristics and configuration of the disposal area/GCCS.

Refer to **Appendix B** for the complete LFG generation projection and background information used for the modeling efforts.

3.2 LFG Modeling Projections

Based upon the historical waste receipts and industry average rates of decomposition, a projection for the LFG recovery potential for the entire facility can be established.

This data should also be corrected for the percentage of the waste mass that is anticipated to be impacted by the GCCS in the given time period. For example, if the waste mass is anticipated to have a recovery potential of 1,000 scfm, but a GCCS has been constructed on only 50% of the waste mass, then the rate of LFG recovery that can reasonably be expected would be approximately 500 scfm.

The *k* and L_0 values for the Bridgeton North Quarry Landfill are based upon the relative moisture of the waste mass and the organic content of the waste mass. The annual precipitation rate can be utilized to approximate a *k* value for the recovery projection. The site location, near Saint Louis in eastern Missouri, receives an annual normal rate of precipitation of approximately 39 inches per year.

3.2.1 Existing Conditions – North Quarry

There are currently no signs of an SSE in the North Quarry disposal area. As such, the potential rate of LFG generation in the North Quarry can be evaluated under what is considered "typical" anaerobic decomposition conditions.

While there are several liquid extraction pumps installed in LFG extraction wells throughout the North Quarry, the liquid levels in the wells currently have a minimal impact on ~~as a whole do not appear to be adversely impacting~~ LFG extraction (levels measured second quarter 2013); nor do the levels indicate that the waste mass is inordinately wet. As such, a value of *k=0.04/year* can be anticipated for this evaluation.

Similarly, the L_0 value can be estimated based upon the composition of the waste stream. Discrete MSW characteristics are not available and no pre-sorting of waste was reported to have been conducted prior to delivery to the landfill. Considering these conditions, a value of $L_0 = 100\ m^3/Mg$ or $3{,}204\ ft^3/ton$ can be utilized for the total LFG generation potential of the MSW fraction, based upon default values for typical landfill. In the event that a more discrete analysis of the waste stream composition becomes available, i.e. the relative percentages of food waste, green waste, paper, etc., the value of L_0 for this facility may be modified.

Based upon provided waste intake data and the defined *k* and L_0 values, the projected LFG generation rate for the year 2013 is approximately ~~315~~ 647 scfm (at 50% CH_4). This compares to the normalized recovery rate of approximately ~~600~~ 607 scfm that is reported by the site (~~June-July 2013~~ September 2013). The noted recovery rate is a summary of the flow readings recorded at the individual wellheads and is not a measurement of the composite flow at a single point. As such, the measured flow rate is potentially subject to compound errors in flow monitoring. Given the potential variances in flow readings inherent in field monitoring of wellheads, the relative comparison of generation versus recovery is representative.

Additionally, the gas quality monitoring (included in **Appendix A**) indicates typical LFG constituent concentrations and does not indicate the presence of an SSE in the North Quarry. As of September 2013:

- All wells in this evaluation were monitored with oxygen levels below 0.5% and temperatures below 150°F.
- Five (5) wells, GEW-6, 44, 47R, 49 and 50 had measured levels of Balance Gas above 20% (by volume). The highest temperature noted in any of these wells was 120°F.
- All wells were being operated at vacuum applications between 3.5 inches of water column and 0.1 inches of water column.
- No observations of "steam" have been made in this area.

The MDNR has previously questioned the operating conditions of several wells, including GEW-1, -40, -41R, -43R, -47R, -49, -53, -54, and -55. A trend analysis of these wells over the period August 2011 through September 2013 is provided in **Attachment E**. The analyses indicate that the general trend for the measured concentration of balance gas, a primary identifier for SSE conditions, is steady to downward. Temperature trends are also steady, with slight increases noted in wells GEW-54 and GEW-55 and a significant downward trend in well GEW-01. None of the wells in the North Quarry have exhibited a spike in temperature or balance gas concentration characteristic of an SSE.

3.2.2 Existing Conditions – South Quarry

Based upon provided waste intake data and the defined k and L_0 values, the LandGEM projection of LFG generation for the South Quarry is approximately 2,517 scfm for 2013, with a corresponding LFG recovery projection of approximately 1,890 scfm, at an average extraction efficiency of 75% (AP-42 default value). Due to the effects of the SSE in the South Quarry, approximately 9,400 scfm of gas is being recovered from the entire facility (September 2013). Allowing for the rate of extraction from the North Quarry, the site is realizing an extraction rate of approximately 8,800 scfm of gas from the South Quarry. This represents a current gas generation rate in the South Quarry of approximately 7,000 scfm that would be attributable to the SSE. This rate is approximately 465% of the projected rate of recovery under AP-42 conditions.

Although it is difficult to quantify a precise level of recovery "efficiency", the relative lack of surficial emissions and subsurface gas detection in surrounding monitoring probes indicates that the overall GCCS is operating in an efficient manner.

A comparison of data from another landfill which experienced a wide-spread SSE indicates that the site experienced a relative reduction in recovered gas of approximately 15-20% per year for the first three years after the installation of a complete temporary cap and enhanced LFG extraction components, including additional vertical wells, under-cap collectors for both gas and liquids, and additional blowers/flares. If this rate of relative reduction is applied to the South Quarry, a projection of future gas recovery from this area may be made.

This projection is indicative of the general trend of LFG recovery going forward – the current rate of gas recovery is projected to be the relative peak rate, now that the Temporary Cover System installation is complete, and future gas recovery rates will be in decline. This premise is further supported by the relative age of the waste mass and the lack of additional organic materials available for consumption by the SSE.

Figure 2
South Quarry Landfill Gas Recovery Comparison

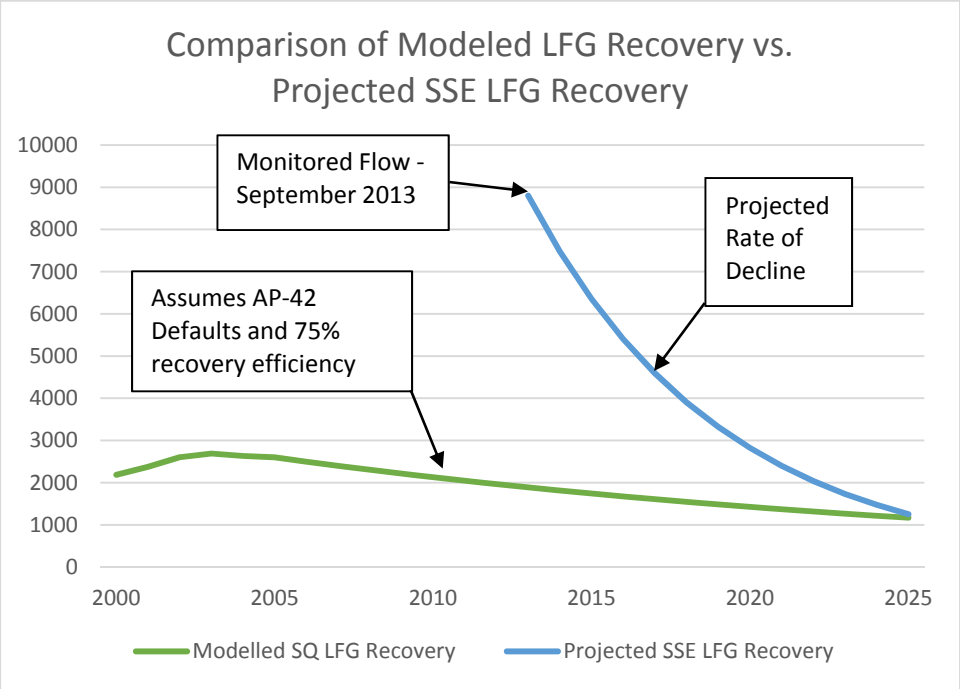

It should also be noted that once the SSE has run its course through a portion of the waste mass, very little "LFG generation" is to be expected from that waste mass. The SSE consumes the organic fraction of the waste that would otherwise been consumed by anaerobic decomposition, effectively eliminating the potential for that waste to produce what is historically considered LFG.

3.2.3 Potential SSE Conditions - North Quarry

~~By comparison, the LandGEM projection of LFG generation for the South Quarry is approximately 1,400 scfm for 2013. Due to the effects of the subsurface event in the South Quarry, approximately 9,400 scfm of gas is being recovered from the entire facility. Allowing for the rate of extraction from the North Quarry, the site is realizing an extraction rate of approximately 8,800 scfm of gas from the South Quarry – a variance of approximately 630%. If this relative increase is applied to the current LFG generation projection for the North Quarry, a potential gas generation rate of approximately 2,200 scfm may be realized. Note that this value assumes that the subsurface event spreads throughout the entire North Quarry waste mass (a very conservative assumption).~~

In the event that the SSE progressed to the North Quarry area, and comparable impacts are applied to the current LFG generation projection for the North Quarry as have been noted for the South Quarry, a potential gas generation rate of approximately 2,850 scfm may be realized. Note that this value assumes that the SSE spreads throughout the entire

North Quarry waste mass (a very conservative assumption). It also does not account for the relatively older waste mass present in the North Quarry compared to the South Quarry, a fact which will likely reduce the overall rate of gas generation since many of the organic components have previously been reduced through anaerobic decomposition.

Note that these models, like any other mathematical projection, should be used only as a tool, and not an absolute declaration of the rate of LFG generation. Fluctuations in the rate and types of incoming waste, site operating conditions, refuse moisture and temperature may provide substantial variations in the actual rates of LFG generation and recovery.

4 EXISTING WELLFIELD INTEGRITY

4.1 Header and Lateral Network

All LFG flow from the North Quarry GCCS is directed to the blower/flare station (common extraction point) along the eastern perimeter of the North Quarry disposal area, with the header piping sized and designed accordingly. LFG from all laterals are commingled into a common 18" perimeter header. The perimeter header branches into an 18" header which leads to the blower/flare station. Lateral piping ranges in size from 6" to 8" HDPE, and is generally installed in an alignment that should promote the positive drainage of condensate to the perimeter header. Additionally, two 12" sub-headers loop over the disposal area from east to west, interconnecting the 18" main header on both sides of the North Quarry.

4.2 Wellfield Data

Wellfield data is summarized in **Appendix A**. The relative status of the wells is color-coded for available perforated casing, degree of liquid impact and gas quality.

4.2.1 Good quality wells

Good quality wells are defined as wells possessing low levels of oxygen or balance gas. Wells with an oxygen level less than 1% are coded in green, as are wells with less than 5% balanced gas.

Coded in yellow are wells with less than ~~3~~5% oxygen or 10% balance gas.

4.2.2 Poor quality wells

Wells that are not currently included in the "good" or "suitable" categories, as noted above, are primarily poor in terms of the percentage of balance gas.

4.2.3 Available vacuum assessment

Vacuum availability is very consistent throughout the existing wellfield. Wells nearest the main flare header currently (~~July~~ September 2013) have an available vacuum of approximately 7.5" water column (wc). The lowest degree of available vacuum is at well GEW50 – an available vacuum of approximately ~~3.2~~ 3.7"wc.

A large degree of vacuum application is currently not required in the North Quarry, due to the relatively large size of the main header piping (18") versus the observed extraction rate (~~624~~ 607 scfm).

4.2.4 Existing Header Sizing

The existing GCCS transports all extracted gas from an 18" perimeter main to the flare station. As the header is graded for both concurrent (gas and condensate draining the same direction) and countercurrent (gas and condensate draining in opposite directions), the system was evaluated for a worst-case condition of counter-current flow. Utilizing a generally accepted industry value of 20 fps velocity these conditions, an 18" header would have the capacity to transport a minimum of 1,640 scfm of LFG.

This assumes that all LFG is directed to either the east or west perimeter headers for transport to the blower/flare station. If LFG is directed through both headers, a combined flow rate of at least 3,280 scfm should be practical.

This value far exceeds the observed rate of LFG extraction and thus is appropriate for the current operating conditions.

4.2.5 Liquid level assessment

Liquid level readings indicate that the wellfield is relatively dry. The impact of liquids should be reassessed on a regular basis, especially for wells that may be re-drilled to lower elevations than are currently monitored.

There are pumps currently employed in several LFG extraction wells, including GEW-2, -3, -41R, -42R, -43R, -44, -45R, -53 and -54. Wells GEW-8-9, and -46R have been 40% and 50% of the available perforations "dry" and capable of extracting LFG. ~~With the exception of wells GEW-2, -3, -7, -, GEW9, GEW41R, GEW42R, GEW43R, GEW46R and GEW53, all~~ All other well casings have more than 50% of their available perforations "dry" and capable of extracting LFG.

4.3 Well Spacing

Extraction wells are currently spaced at a frequency of approximately 150 feet to 350 feet. The spacing is denser in the interior of the disposal areas frequent along the perimeter of the disposal area where waste is placed in significantly thinner layers.

In the event that control of surface emissions becomes more difficult, or air intrusion at extraction wells becomes more prevalent, the installation of wells at a greater frequency may be warranted, but at this time does not appear to be necessary.

4.4 Material Evaluation

The material utilized for all observed/reported components meets or exceeds industry expectations, including PVC for well casings, HDPE for all header and lateral piping, and HDPE for all condensate management structures.

4.5 Overall Wellfield – Current Conditions

The overall condition of the wellfield and associated components is good and will ~~should~~ provide a sound basis for continued LFG control. The wells ~~seem to be in relatively~~ good condition and functioning well, with few wells ~~apparently~~ impacted by waste consolidation and differential settlement.

Liquids impacts are minimal. ~~as the waste mass itself appears to be not suspending liquids that could impact the operation of the extraction wells.~~ As noted in Section 4.2.5, there are a series of wells that have exhibited elevated liquid levels that have pumps currently installed. The pumping system reduces the liquid levels within the well casings and provides additional perforated casing for LFG extraction.

4.6 Existing/Proposed Gas Control Facilities

LFG flow from both the North Quarry and the South Quarry is directed to the primary blower/flare station (common extraction point) along the northern perimeter of the South Quarry disposal area. The primary blower flare station includes the following components (with relative capacities noted):

- John Zink Blower Skid – 10,000 scfm at 90”wc total static pressure (TSP)
- John Zink Enclosed Flare – 3,500 scfm
- Callidus Enclosed Flare – 3,500 scfm
- John Zink Utility Flare – 2,500 scfm
- A bank of small gas coolers and particulate filters installed between the wellfield and the Blower Skid inlet

A Permit to Construct was issued August 7, 2013 by the St. Louis County Department of Health, providing for the modification of the blower and flare components. Specifically:

- The two enclosed flares will be decommissioned and replaced with two - 4,000 scfm utility (open) flares;
- The capacity of the existing 2,500 scfm utility flare will be increased to 3,500 scfm; and
- An additional 2,500 scfm utility flare will be installed. This flare will utilize its own blower(s) and be located along the eastern perimeter of the South Quarry.

As of September 25, 2013, the new utility flares were installed and operational and the enclosed flares had been disconnected from the GCCS. Additionally, the existing gas coolers are scheduled to be replaced by a single larger, more efficient cooler. This replacement is scheduled to be complete by the end of October.

These modifications increase the extraction and combustion capacity of the facility to approximately 12,500 scfm. Compared to the currently measured and projected rate of gas generation and recovery, the proposed blower and flare components are adequately sized for control of all LFG anticipated for this facility (12,500 scfm capacity versus 8,800 scfm from the South Quarry plus 2,850 scfm from the North Quarry under potential SSE conditions)

This assumes that the North Quarry becomes fully impacted by SSE conditions immediately, and that the full rate of projected gas generation from the North Quarry is added to that being realized from the South Quarry. It is likely that increased gas generation in the North Quarry would occur gradually, allowing the existing excess capacity to accommodate extra gas while an evaluation is undertaken to determine if conditions warrant addition of flare capacity. It is also possible that the gas generation rate in the South Quarry will be in decline at this point, as the SSE consumes available organic materials, providing additional flare capacity for gas management from the North Quarry.

5 RECOMMENDED MODIFICATIONS FOR POTENTIAL SSE ~~(IF TRIGGERED)~~

~~Although the wellfield is generally operating well, and appears to be in good condition from a maintenance perspective,~~ Bridgeton has elected to proceed with proposed modifications to the GCCS, the geomembrane cap and the cap integrity system. ~~there are a number of items which should be considered in the event that the SSE involves the North Quarry disposal area~~. Proposed modifications are outlined below and in the plan set entitled "*Construction Plan for ~~Contingent~~ North Quarry Enhanced Gas Collection and Control System (GCCS)*", included as **Appendix C** of this evaluation. Please refer to the *Construction Plans for the North Quarry – EVOH Geomembrane Cap and Cap Integrity System, modified October 2013*, prepared by Cornerstone Environmental Group, LLC. For details on these components.

~~These recommendations assume that all existing components remain operable under future conditions. Select components may require replacement or maintenance as a result of age and settlement.~~

5.1 Extraction Well Replacement

Existing well casings should be replaced as needed with steel casings in order to withstand the elevated temperatures that may accompany the subsurface event. This would likely include, but not be limited to, wells installed within the limits of the deeper quarry areas. These wells are typically constructed in thicker deposits of waste and are more likely to be impacted by elevated temperatures as a result of the potential subsurface event. Wells that are currently functional and not subjected to elevated temperatures will be maintained.

5.2 Additional Extraction Wells

~~The potential for additional extraction wells should be considered~~. The wellfield within and adjacent to the quarry excavation has been amended to incorporate vertical extraction wells at a more frequent spacing. Radius of Influence and Well Spacing Calculations (provided in **Appendix D**) for both the existing conditions and the potential SSE conditions indicate a well spacing in excess of 150 feet in this area, for wells ranging in depth from 40 feet to 140 feet. The revised well locations can be found on Sheet Nos. 2A, 2B and 2C of the plan set, with an updated well schedule presented on Sheet No. 3.

The design of additional and/or replacement extraction wells has been modified to extend to depths achievable by readily-available construction equipment - this is estimated to be approximately 140 feet in depth. The waste deposited in the base of the North Quarry is the oldest, and presumably the most highly-decayed, material in the disposal area. Waste

deposition in this part of the landfill was initiated circa 1979. Gas generation from this part of the disposal area is anticipated to be minimal at this time.

Observations of the vertical location of the SSE in the South Quarry affirm that well depths of 140 feet will fully transect the impacted waste mass, allowing for collection of heat and gasses that may result if an SSE were present in the North Quarry.

Also, the window for the installation of these components will be relatively tight and specialty construction equipment may not be available within the required time frame. In the event that drilling equipment capable of installing wells to within 15 feet of the base of the quarry, in the deepest part of the quarry, is available at the time of construction, Bridgeton will evaluate the need for wells of this depth based upon the field conditions observed at that time and historical operational parameters of comparable wells at this facility.

There are portions of the disposal area in which wells are spaced at distances exceeding 300 feet. These areas are typically outside the limits of the quarry excavation and possess relatively thin waste lenses. The gas extraction capacity of the Cap Integrity System (described in a separate report) is anticipated to accommodate the majority of additional gas extraction in the perimeter areas, however additional wells may be required in select locations based upon field conditions.

5.3 Wellfield Pumps

Compressed air and force main piping should be extended to all future extraction wells to enable the application of the liquids removal on an as-needed basis. As the existing air and forcemain piping was not designed for the relative volume of pumping that would be anticipated under subsurface event conditions, a supplemental air and forcemain system is proposed, including (nominally) a 2” compressed air main and a 3”x6” forcemain. The size of both components should be reevaluated based upon actual needs at the time of construction.

5.4 Header Pipe Modifications

As noted in Section 4.2.4, the existing perimeter header is sized to accommodate at least 5,800 scfm of LFG under counter-current flow conditions. However, there is a single 18” header from the perimeter piping system to the blower/flare station, effectively limiting the flow from the North Quarry to the blower/flare station to approximately 1,640 scfm. Additionally, in the event that a blockage occurs along the perimeter header, the two 12” headers that traverse the North Quarry disposal area have the capacity to transport approximately 820 cfm under counter-current flow conditions and a velocity limitation of 20 fps – providing a total of 1,640 cfm of “bypass” capacity from the western perimeter to the eastern perimeter.

For the potential extraction rate of ~~2,200~~ 2,850 cfm, as described in Section 3.2, additional header capacity for bypass of LFG from the western perimeter to the eastern perimeter, as well as to the blower/flare station, should be considered. It is proposed to install a (nominal) 24" header traversing the North Quarry disposal area and extending to the inlet of the blower/flare station. This would provide a minimum of 2,900 cfm of additional bypass capacity, bringing the total bypass capacity to approximately 4,540 cfm. It would also increase the inlet capacity to the blower/flare station to a minimum of 4,540 cfm.

The proposed header from the wellfield to the blower/flare station will be installed in the event that the North Quarry disposal area experiences an SSE and additional header capacity is required. It is not proposed for installation at the present time. Since the North Quarry disposal area is not experiencing an SSE.

New extraction wells should be connected to the GCCS piping with a minimum of 6" lateral piping.

Additional condensate management structures may also be required, depending upon the routing and available topography at the time of construction.

Unless prohibited by future operating conditions, all proposed piping would be constructed utilizing HDPE, including the LFG, compressed air and liquid forcemain piping, and would be constructed above grade.

5.5 Flare Capacity

The flare capacity of the facility has been modified to reflect the Permit to Construct issued August 7, 2013 by the St. Louis County Department of Health. No further modifications are proposed at this time.

~~The currently proposed flare arrangement that includes two utility flares in the flare compound area, and one utility flare on the east side of the South Quarry has potential capacity of 12,000 cfm. As previously discussed, the current gas volume, including additional gas related to the SSE in the South Quarry is 9,400 cfm. This leaves an excess capacity of 2,600 cfm.~~

~~The potential North Quarry gas generation under full SSE conditions is 2,200 cfm, or slightly less than the current excess capacity. It is likely that the increased gas generation in the North Quarry would occur gradually, allowing the existing excess capacity to accommodate extra gas while an evaluation is undertaken to determine if conditions warrant addition of flare capacity. It is also possible that the gas generation rate in the South Quarry will be in decline at this point, as the SSE consumes available organic materials, providing additional flare capacity for gas management from the North Quarry.~~

LIMITATIONS

The work product included in the attached was undertaken in full conformity with generally accepted professional consulting principles and practices and to the fullest extent as allowed by law we expressly disclaim all warranties, express or implied, including warranties of merchantability or fitness for a particular purpose. The work product was completed in full conformity with the contract with our client and this document is solely for the use and reliance of our client (unless previously agreed upon that a third party could rely on the work product) and any reliance on this work product by an unapproved outside party is at such party's risk.

The work product herein (including opinions, conclusions, suggestions, etc.) was prepared based on the situations and circumstances as found at the time, location, scope and goal of our performance and thus should be relied upon and used by our client recognizing these considerations and limitations. Cornerstone shall not be liable for the consequences of any change in environmental standards, practices, or regulations following the completion of our work and there is no warrant to the veracity of information provided by third parties, or the partial utilization of this work product.

APPENDIX A

WELLFIELD DATA

CORNERSTONE
Environmental Group, LLC

PROJECT NO: 130557

PROJECT TITLE: Bridgeton GCCS Evaluation
DESCRIPTION: Wellfield Data Compilation
North Quarry
PREPARED BY: TAB DATE: 9/25/2013

80%	Greater than 75% available
23%	Less than 25% available
1	Less than 1%
5	Less than 5%
5	Less than 5%
10	Less than 10%

Well ID	Boring Depth (Ft. from GS) [1]	Ground Surface - Current (MSL)	Latest Depth to Bottom or Refusal - Current (Ft. from GS)	Depth to Liquid (Ft. from GS) [2]	Total Liquid Column (Ft.) [2]	Perforated Length (Ft.) at Installation [1]	Solid Length (Ft.) at Installation [1]	Solid Length (Ft.) from Measurement [3]	Pump (Y/N)	Perforated Length Available (Ft.)	Perforated Length Dry (Ft.)	Percentage of Original Perf. Length Available	Percentage of Available Perf. Length Dry	CH4	CO2	O2	BalGas	Applied Vacuum ("wc)	Flow (scfm)	Temp (°F)	Normalized Flow	Flow per Ft. of Available Perf.	Available System Pressure ("wc)
GEW1	n/a	480.0	22.1	22.1	0.0	60	n/a	n/a	N	n/a	n/a	n/a	n/a	61.6	26.3	0	12.3	-3.4	12	111	15	n/a	-6.5
GEW2	159	515.7	74	54	20.0	106	53	53	Y	21.0	1.0	19.81%	5%	53.8	44	0	2.2	-0.2	32	137	34	34.4	-5.1
GEW3	159	519.8	100	55.5	44.5	106	53	53	Y	47.0	2.5	44.34%	5%	54.7	45	0	0.3	-1.3	80	87	88	35.0	-5.1
GEW4	74	522.9	71	59.4	11.6	49	25	25	N	46.0	34.4	93.88%	75%	42.2	38.3	0	19.5	-0.2	15	114	13	0.4	-6.0
GEW5	35	523.2	32.5	32.5	0.0	21	14	14	N	18.5	18.5	88.10%	100%	40.9	37.1	0	22	-0.7	20	102	16	0.9	-6.3
GEW6	44	512.0	49	40	9.0	30	14	19	N	30.0	21.0	100.00%	70%	29.6	32	0	38.4	-0.1	12	101	7	0.3	-6.0
GEW7	72	481.8	63	40.6	22.4	48	24	24	N	39.0	16.6	81.25%	43%	54.1	40.2	0	5.7	-3.5	32	111	35	2.1	-5.3
GEW8	64	492.4	77	54.6	22.4	40	24	37	N	40.0	17.6	100.00%	44%	51.3	40.8	0	7.9	-1.7	30	125	31	1.7	-5.4
GEW40	48	502.4	34.1	34.1	0.0	49	25	25	N	9.1	9.1	18.57%	100%	50.1	46	0	3.9	-0.7	19	103	19	2.1	-7.5
GEW41R	135	507.0	117.0	46.1	70.9	115	20	20	Y	97.0	26.1	84.35%	27%	52.5	41.1	0	6.4	-1.6	56	114	59	2.3	-5.1
GEW42R	100	507.1	103.2	47.6	55.6	80	20	23	Y	80.0	24.4	100.00%	31%	49	40.1	0	10.9	-0.7	40	113	39	1.6	-6.5
GEW43R	117	511.6	118.9	59.7	59.2	97	20	22	Y	97.0	37.8	100.00%	39%	50	41.5	0	8.5	-0.4	30	135	30	0.8	-4.8
GEW44	151	517.0	53.2	44.1	9.1	100	51	51	Y	2.2	(6.9)	2.20%	-314%	35.1	33.8	0	31.1	-0.7	18	105	13	0.0	-4.9
GEW45R	76	501.2	79.0	65.4	13.6	56	20	23	Y	56.0	42.4	100.00%	76%	51.4	38.9	0	9.7	-2	41	106	42	1.0	-5.0
GEW46R	86	506.2	79.1	44.9	34.2	66	20	20	N	59.1	24.9	89.55%	42%	50.4	42	0	7.6	-0.1	18	125	18	0.7	-4.9
GEW47R	64	521.9	71.0	61.2	9.8	44	20	27	N	44.0	34.2	100.00%	78%	32.4	34.5	0.1	33	-0.3	25	120	16	0.5	-4.4
GEW48	62	522.0	60.0	60.0	0.0	48	14	14	N	46.0	46.0	95.83%	100%	47.3	38.5	0	14.2	-0.1	5	114	5	0.1	-6.0
GEW49	66	518.5	70.5	70.5	0.0	50	15	20	N	51.0	51.0	100.00%	100%	41.3	36.6	0	22.1	-0.1	28	116	23	0.5	-7.7
GEW50	53	523.6	51.0	45.7	5.3	35	16	16	N	35.0	29.7	100.00%	85%	43.2	34.9	0	21.9	-1.5	38	115	33	1.1	-3.2
GEW51	69	518.4	75.0	64.8	10.2	40	29	35	N	40.0	29.8	100.00%	75%	49.1	40.4	0.1	10.4	-0.1	11	126	11	0.4	-6.5
GEW52	62	521.7	64.0	56.9	7.1	48	21	23	N	41.0	33.9	85.42%	83%	44.1	38.3	0	17.6	-0.1	14	112	12	0.4	-4.4
GEW53	135	514.3	128.0	74.9	53.1	100	35	35	Y	93.0	39.9	93.00%	43%	48.7	45	0	6.3	-0.1	17	145	17	0.4	-6.2
GEW54	135	510.3	128.1	82.5	45.6	100	35	35	Y	93.1	47.5	93.10%	51%	48	40.9	0	11.1	-0.2	17	148	16	0.3	-8.2
GEW55	84	507.1	85.2	85.2	0.0	60	23	24	N	61.0	61.0	100.00%	100%	51	45.4	0	3.6	-0.1	16	135	16	0.3	-6.7
																		SUM	626	SUM	607		

Notes:
1. Record construction data excerpted from the Revised Gas Collection and Control System Report, by Aquaterra, September 2009
2. Field measurements provided by Bridgeton, September 2013
3. Wells that measure at a depth greater than the documented depth of boring are assumed to have been extended with solid casing at some point in time.

APPENDIX B

LANDGEM MODELS – NORTH AND SOUTH QUARRIES

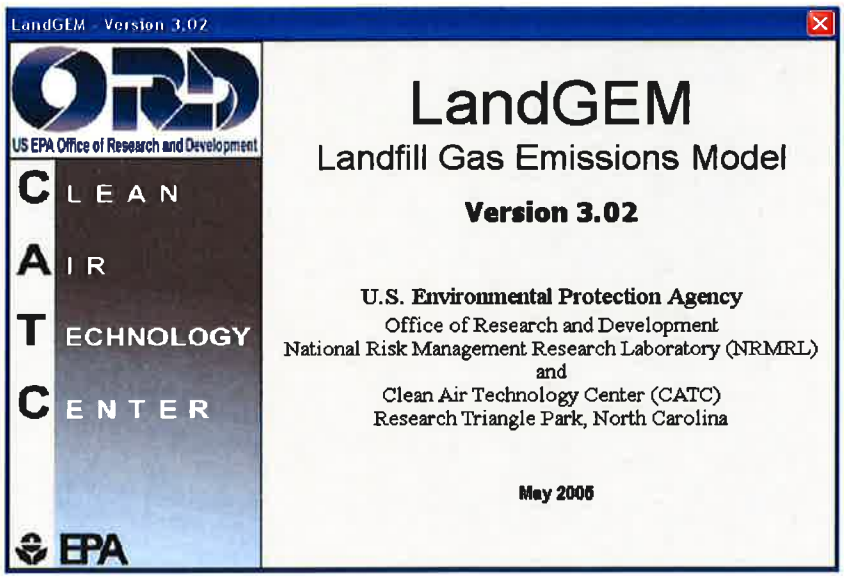

Summary Report

Landfill Name or Identifier: Bridgeton North Quarry 082313

Date: Friday, September 27, 2013

Description/Comments:
Period of operation is estimated between approximately 1979 and 2004 based on site information. Volume is approximately 3.48 million cubic yards or approximately 2.84 million tons at a density of 1629 lb/cyd. Waste intake rates approximated from multiple source documents provided by others.

About LandGEM:

First-Order Decomposition Rate Equation:

$$Q_{CH_4} = \sum_{i=1}^{n} \sum_{j=0.1}^{1} kL_o \left(\frac{M_i}{10} \right) e^{-kt_{ij}}$$

Where,

Q_{CH4} = annual methane generation in the year of the calculation (m^3/year)
i = 1-year time increment
n = (year of the calculation) - (initial year of waste acceptance)
j = 0.1-year time increment
k = methane generation rate ($year^{-1}$)
L_o = potential methane generation capacity (m^3/Mg)
M_i = mass of waste accepted in the ith year (*Mg*)
t_{ij} = age of the jth section of waste mass M_i accepted in the ith year (*decimal years*, e.g., 3.2 years)

LandGEM is based on a first-order decomposition rate equation for quantifying emissions from the decomposition of landfilled waste in municipal solid waste (MSW) landfills. The software provides a relatively simple approach to estimating landfill gas emissions. Model defaults are based on empirical data from U.S. landfills. Field test data can also be used in place of model defaults when available. Further guidance on EPA test methods, Clean Air Act (CAA) regulations, and other guidance regarding landfill gas emissions and control technology requirements can be found at http://www.epa.gov/ttnatw01/landfill/landflpg.html.

LandGEM is considered a screening tool — the better the input data, the better the estimates. Often, there are limitations with the available data regarding waste quantity and composition, variation in design and operating practices over time, and changes occurring over time that impact the emissions potential. Changes to landfill operation, such as operating under wet conditions through leachate recirculation or other liquid additions, will result in generating more gas at a faster rate. Defaults for estimating emissions for this type of operation are being developed to include in LandGEM along with defaults for convential landfills (no leachate or liquid additions) for developing emission inventories and determining CAA applicability. Refer to the Web site identified above for future updates.

Input Review

LANDFILL CHARACTERISTICS

Landfill Open Year	**1979**	
Landfill Closure Year (with 80-year limit)	**2004**	
Actual Closure Year (without limit)	***2004***	
Have Model Calculate Closure Year?	**No**	
Waste Design Capacity	**2,837,993**	*short tons*

MODEL PARAMETERS

Methane Generation Rate, k	**0.040**	*year^{-1}*
Potential Methane Generation Capacity, L_o	**100**	*m^3/Mg*
NMOC Concentration	**4,000**	*ppmv as hexane*
Methane Content	**50**	*% by volume*

GASES / POLLUTANTS SELECTED

Gas / Pollutant #1:	**Total landfill gas**
Gas / Pollutant #2:	**Methane**
Gas / Pollutant #3:	**Carbon dioxide**
Gas / Pollutant #4:	**NMOC**

WASTE ACCEPTANCE RATES

Year	Waste Accepted		Waste-In-Place	
	(Mg/year)	(short tons/year)	(Mg)	(short tons)
1979	129,408	142,349	0	0
1980	129,681	142,649	129,408	142,349
1981	128,815	141,696	259,089	284,998
1982	224,604	247,064	387,904	426,694
1983	224,604	247,064	612,507	673,758
1984	224,604	247,064	837,111	920,822
1985	0	0	1,061,715	1,167,886
1986	0	0	1,061,715	1,167,886
1987	0	0	1,061,715	1,167,886
1988	0	0	1,061,715	1,167,886
1989	0	0	1,061,715	1,167,886
1990	0	0	1,061,715	1,167,886
1991	0	0	1,061,715	1,167,886
1992	0	0	1,061,715	1,167,886
1993	0	0	1,061,715	1,167,886
1994	0	0	1,061,715	1,167,886
1995	138,248	152,073	1,061,715	1,167,886
1996	154,574	170,031	1,199,963	1,319,959
1997	173,046	190,350	1,354,537	1,489,991
1998	173,235	190,559	1,527,582	1,680,341
1999	197,505	217,255	1,700,818	1,870,899
2000	207,686	228,455	1,898,322	2,088,155
2001	240,412	264,454	2,106,009	2,316,610
2002	145,106	159,617	2,346,421	2,581,063
2003	35,929	39,522	2,491,527	2,740,680
2004	52,537	57,791	2,527,456	2,780,202
2005	0	0	2,579,994	2,837,993
2006	0	0	2,579,994	2,837,993
2007	0	0	2,579,994	2,837,993
2008	0	0	2,579,994	2,837,993
2009	0	0	2,579,994	2,837,993
2010	0	0	2,579,994	2,837,993
2011	0	0	2,579,994	2,837,993
2012	0	0	2,579,994	2,837,993
2013	0	0	2,579,994	2,837,993
2014	0	0	2,579,994	2,837,993
2015	0	0	2,579,994	2,837,993
2016	0	0	2,579,994	2,837,993
2017	0	0	2,579,994	2,837,993
2018	0	0	2,579,994	2,837,993

WASTE ACCEPTANCE RATES (Continued)

Year	Waste Accepted		Waste-In-Place	
	(Mg/year)	(short tons/year)	(Mg)	(short tons)
2019	0	0	2,579,994	2,837,993
2020	0	0	2,579,994	2,837,993
2021	0	0	2,579,994	2,837,993
2022	0	0	2,579,994	2,837,993
2023	0	0	2,579,994	2,837,993
2024	0	0	2,579,994	2,837,993
2025	0	0	2,579,994	2,837,993
2026	0	0	2,579,994	2,837,993
2027	0	0	2,579,994	2,837,993
2028	0	0	2,579,994	2,837,993
2029	0	0	2,579,994	2,837,993
2030	0	0	2,579,994	2,837,993
2031	0	0	2,579,994	2,837,993
2032	0	0	2,579,994	2,837,993
2033	0	0	2,579,994	2,837,993
2034	0	0	2,579,994	2,837,993
2035	0	0	2,579,994	2,837,993
2036	0	0	2,579,994	2,837,993
2037	0	0	2,579,994	2,837,993
2038	0	0	2,579,994	2,837,993
2039	0	0	2,579,994	2,837,993
2040	0	0	2,579,994	2,837,993
2041	0	0	2,579,994	2,837,993
2042	0	0	2,579,994	2,837,993
2043	0	0	2,579,994	2,837,993
2044	0	0	2,579,994	2,837,993
2045	0	0	2,579,994	2,837,993
2046	0	0	2,579,994	2,837,993
2047	0	0	2,579,994	2,837,993
2048	0	0	2,579,994	2,837,993
2049	0	0	2,579,994	2,837,993
2050	0	0	2,579,994	2,837,993
2051	0	0	2,579,994	2,837,993
2052	0	0	2,579,994	2,837,993
2053	0	0	2,579,994	2,837,993
2054	0	0	2,579,994	2,837,993
2055	0	0	2,579,994	2,837,993
2056	0	0	2,579,994	2,837,993
2057	0	0	2,579,994	2,837,993
2058	0	0	2,579,994	2,837,993

Pollutant Parameters

		Gas / Pollutant Default Parameters:		*User-specified Pollutant Parameters:*	
	Compound	Concentration (*ppmv*)	Molecular Weight	Concentration (*ppmv*)	Molecular Weight
Gases	Total landfill gas		0.00		
	Methane		16.04		
	Carbon dioxide		44.01		
	NMOC	4,000	86.18		
Pollutants	1,1,1-Trichloroethane (methyl chloroform) - HAP	0.48	133.41		
	1,1,2,2-Tetrachloroethane - HAP/VOC	1.1	167.85		
	1,1-Dichloroethane (ethylidene dichloride) - HAP/VOC	2.4	98.97		
	1,1-Dichloroethene (vinylidene chloride) - HAP/VOC	0.20	96.94		
	1,2-Dichloroethane (ethylene dichloride) - HAP/VOC	0.41	98.96		
	1,2-Dichloropropane (propylene dichloride) - HAP/VOC	0.18	112.99		
	2-Propanol (isopropyl alcohol) - VOC	50	60.11		
	Acetone	7.0	58.08		
	Acrylonitrile - HAP/VOC	6.3	53.06		
	Benzene - No or Unknown Co-disposal - HAP/VOC	1.9	78.11		
	Benzene - Co-disposal - HAP/VOC	11	78.11		
	Bromodichloromethane - VOC	3.1	163.83		
	Butane - VOC	5.0	58.12		
	Carbon disulfide - HAP/VOC	0.58	76.13		
	Carbon monoxide	140	28.01		
	Carbon tetrachloride - HAP/VOC	4.0E-03	153.84		
	Carbonyl sulfide - HAP/VOC	0.49	60.07		
	Chlorobenzene - HAP/VOC	0.25	112.56		
	Chlorodifluoromethane	1.3	86.47		
	Chloroethane (ethyl chloride) - HAP/VOC	1.3	64.52		
	Chloroform - HAP/VOC	0.03	119.39		
	Chloromethane - VOC	1.2	50.49		
	Dichlorobenzene - (HAP for para isomer/VOC)	0.21	147		
	Dichlorodifluoromethane	16	120.91		
	Dichlorofluoromethane - VOC	2.6	102.92		
	Dichloromethane (methylene chloride) - HAP	14	84.94		
	Dimethyl sulfide (methyl sulfide) - VOC	7.8	62.13		
	Ethane	890	30.07		
	Ethanol - VOC	27	46.08		

Pollutant Parameters (Continued)

		Gas / Pollutant Default Parameters:		*User-specified Pollutant Parameters:*	
	Compound	Concentration (*ppmv*)	Molecular Weight	Concentration (*ppmv*)	Molecular Weight
Pollutants	Ethyl mercaptan (ethanethiol) - VOC	2.3	62.13		
	Ethylbenzene - HAP/VOC	4.6	106.16		
	Ethylene dibromide - HAP/VOC	1.0E-03	187.88		
	Fluorotrichloromethane - VOC	0.76	137.38		
	Hexane - HAP/VOC	6.6	86.18		
	Hydrogen sulfide	36	34.08		
	Mercury (total) - HAP	2.9E-04	200.61		
	Methyl ethyl ketone - HAP/VOC	7.1	72.11		
	Methyl isobutyl ketone - HAP/VOC	1.9	100.16		
	Methyl mercaptan - VOC	2.5	48.11		
	Pentane - VOC	3.3	72.15		
	Perchloroethylene (tetrachloroethylene) - HAP	3.7	165.83		
	Propane - VOC	11	44.09		
	t-1,2-Dichloroethene - VOC	2.8	96.94		
	Toluene - No or Unknown Co-disposal - HAP/VOC	39	92.13		
	Toluene - Co-disposal - HAP/VOC	170	92.13		
	Trichloroethylene (trichloroethene) - HAP/VOC	2.8	131.40		
	Vinyl chloride - HAP/VOC	7.3	62.50		
	Xylenes - HAP/VOC	12	106.16		

Graphs

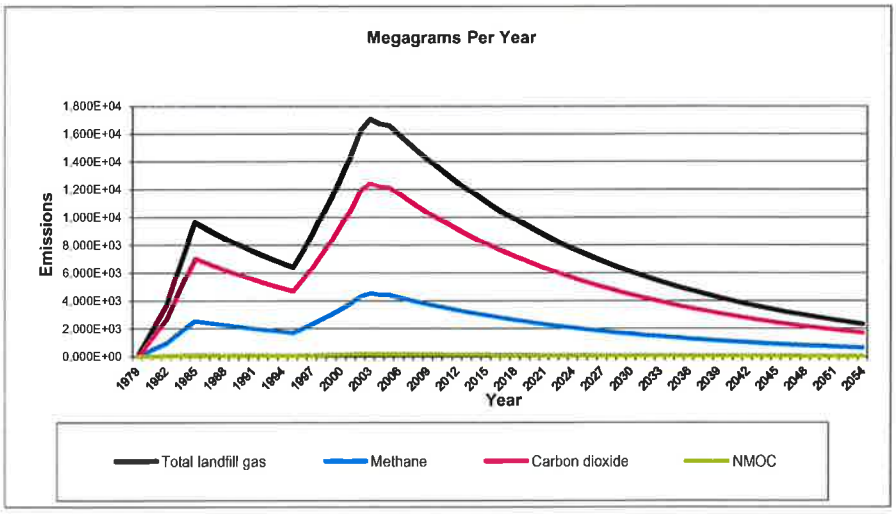
Megagrams Per Year
Emissions
1.800E+04
1.600E+04
1.400E+04
1.200E+04
1.000E+04
8.000E+03
6.000E+03
4.000E+03
2.000E+03
0.000E+00
1979 1982 1985 1988 1991 1994 1997 2000 2003 2006 2009 2012 2015 2018 2021 2024 2027 2030 2033 2036 2039 2042 2045 2048 2051 2054
Year
Total landfill gas
Methane
Carbon dioxide
NMOC

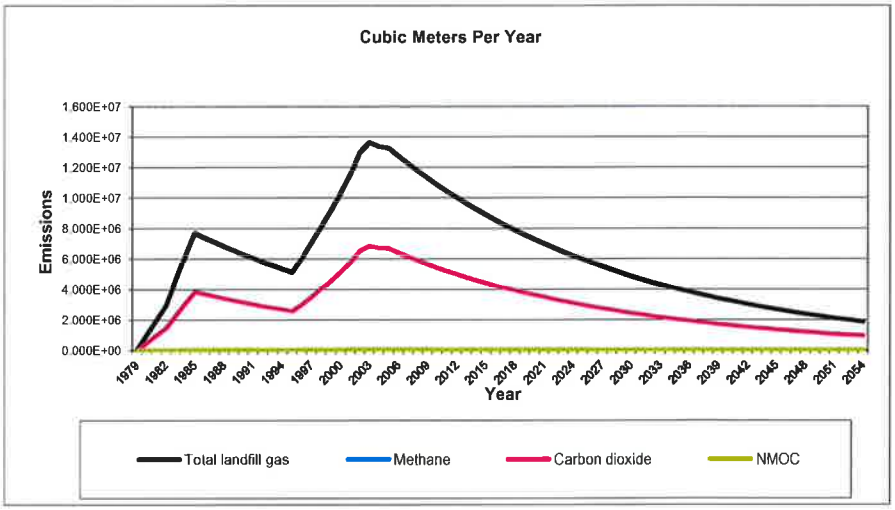
Cubic Meters Per Year
Emissions
1.600E+07
1.400E+07
1.200E+07
1.000E+07
8.000E+06
6.000E+06
4.000E+06
2.000E+06
0.000E+00
1979 1982 1985 1988 1991 1994 1997 2000 2003 2006 2009 2012 2015 2018 2021 2024 2027 2030 2033 2036 2039 2042 2045 2048 2051 2054
Year
Total landfill gas
Methane
Carbon dioxide
NMOC

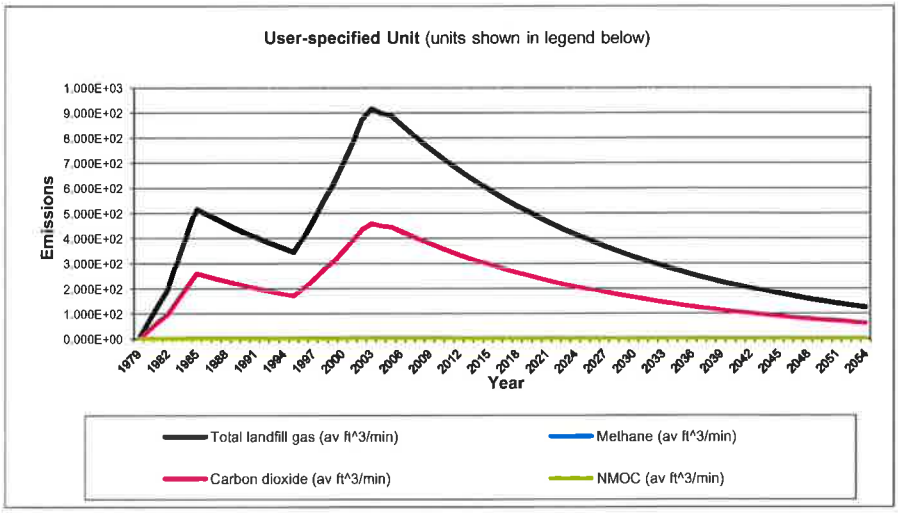
User-specified Unit (units shown in legend below)
Emissions
1.000E+03
9.000E+02
8.000E+02
7.000E+02
6.000E+02
5.000E+02
4.000E+02
3.000E+02
2.000E+02
1.000E+02
0.000E+00
1979 1982 1985 1988 1991 1994 1997 2000 2003 2006 2009 2012 2015 2018 2021 2024 2027 2030 2033 2036 2039 2042 2045 2048 2051 2054
Year
Total landfill gas (av ft^3/min)
Methane (av ft^3/min)
Carbon dioxide (av ft^3/min)
NMOC (av ft^3/min)

Results

Year	Total landfill gas			Methane		
	(Mg/year)	(m^3/year)	(av ft^3/min)	(Mg/year)	(m^3/year)	(av ft^3/min)
1979	0	0	0	0	0	0
1980	1.270E+03	1.017E+06	6.832E+01	3.392E+02	5.084E+05	3.416E+01
1981	2.493E+03	1.996E+06	1.341E+02	6.658E+02	9.980E+05	6.706E+01
1982	3.659E+03	2.930E+06	1.969E+02	9.774E+02	1.465E+06	9.843E+01
1983	5.720E+03	4.580E+06	3.077E+02	1.528E+03	2.290E+06	1.539E+02
1984	7.699E+03	6.165E+06	4.142E+02	2.057E+03	3.083E+06	2.071E+02
1985	9.601E+03	7.688E+06	5.166E+02	2.565E+03	3.844E+06	2.583E+02
1986	9.225E+03	7.387E+06	4.963E+02	2.464E+03	3.693E+06	2.482E+02
1987	8.863E+03	7.097E+06	4.769E+02	2.367E+03	3.549E+06	2.384E+02
1988	8.516E+03	6.819E+06	4.582E+02	2.275E+03	3.410E+06	2.291E+02
1989	8.182E+03	6.552E+06	4.402E+02	2.185E+03	3.276E+06	2.201E+02
1990	7.861E+03	6.295E+06	4.229E+02	2.100E+03	3.147E+06	2.115E+02
1991	7.553E+03	6.048E+06	4.064E+02	2.017E+03	3.024E+06	2.032E+02
1992	7.257E+03	5.811E+06	3.904E+02	1.938E+03	2.905E+06	1.952E+02
1993	6.972E+03	5.583E+06	3.751E+02	1.862E+03	2.791E+06	1.876E+02
1994	6.699E+03	5.364E+06	3.604E+02	1.789E+03	2.682E+06	1.802E+02
1995	6.436E+03	5.154E+06	3.463E+02	1.719E+03	2.577E+06	1.731E+02
1996	7.540E+03	6.038E+06	4.057E+02	2.014E+03	3.019E+06	2.028E+02
1997	8.761E+03	7.016E+06	4.714E+02	2.340E+03	3.508E+06	2.357E+02
1998	1.012E+04	8.100E+06	5.443E+02	2.702E+03	4.050E+06	2.721E+02
1999	1.142E+04	9.144E+06	6.144E+02	3.050E+03	4.572E+06	3.072E+02
2000	1.291E+04	1.034E+07	6.946E+02	3.448E+03	5.169E+06	3.473E+02
2001	1.444E+04	1.156E+07	7.770E+02	3.857E+03	5.782E+06	3.885E+02
2002	1.623E+04	1.300E+07	8.735E+02	4.336E+03	6.500E+06	4.367E+02
2003	1.702E+04	1.363E+07	9.158E+02	4.547E+03	6.815E+06	4.579E+02
2004	1.671E+04	1.338E+07	8.989E+02	4.463E+03	6.689E+06	4.494E+02
2005	1.657E+04	1.327E+07	8.914E+02	4.425E+03	6.633E+06	4.457E+02
2006	1.592E+04	1.275E+07	8.564E+02	4.252E+03	6.373E+06	4.282E+02
2007	1.529E+04	1.225E+07	8.228E+02	4.085E+03	6.123E+06	4.114E+02
2008	1.469E+04	1.177E+07	7.906E+02	3.925E+03	5.883E+06	3.953E+02
2009	1.412E+04	1.130E+07	7.596E+02	3.771E+03	5.652E+06	3.798E+02
2010	1.356E+04	1.086E+07	7.298E+02	3.623E+03	5.431E+06	3.649E+02
2011	1.303E+04	1.044E+07	7.012E+02	3.481E+03	5.218E+06	3.506E+02
2012	1.252E+04	1.003E+07	6.737E+02	3.345E+03	5.013E+06	3.368E+02
2013	1.203E+04	9.633E+06	6.473E+02	3.213E+03	4.817E+06	3.236E+02
2014	1.156E+04	9.256E+06	6.219E+02	3.087E+03	4.628E+06	3.109E+02
2015	1.111E+04	8.893E+06	5.975E+02	2.966E+03	4.446E+06	2.988E+02
2016	1.067E+04	8.544E+06	5.741E+02	2.850E+03	4.272E+06	2.870E+02
2017	1.025E+04	8.209E+06	5.516E+02	2.738E+03	4.105E+06	2.758E+02
2018	9.850E+03	7.887E+06	5.299E+02	2.631E+03	3.944E+06	2.650E+02
2019	9.463E+03	7.578E+06	5.092E+02	2.528E+03	3.789E+06	2.546E+02
2020	9.092E+03	7.281E+06	4.892E+02	2.429E+03	3.640E+06	2.446E+02
2021	8.736E+03	6.995E+06	4.700E+02	2.333E+03	3.498E+06	2.350E+02
2022	8.393E+03	6.721E+06	4.516E+02	2.242E+03	3.360E+06	2.258E+02
2023	8.064E+03	6.457E+06	4.339E+02	2.154E+03	3.229E+06	2.169E+02
2024	7.748E+03	6.204E+06	4.169E+02	2.070E+03	3.102E+06	2.084E+02
2025	7.444E+03	5.961E+06	4.005E+02	1.988E+03	2.980E+06	2.003E+02
2026	7.152E+03	5.727E+06	3.848E+02	1.910E+03	2.864E+06	1.924E+02
2027	6.872E+03	5.503E+06	3.697E+02	1.836E+03	2.751E+06	1.849E+02
2028	6.602E+03	5.287E+06	3.552E+02	1.764E+03	2.643E+06	1.776E+02

Results (Continued)

Year	Total landfill gas			Methane		
	(Mg/year)	(m^3/year)	(av ft^3/min)	(Mg/year)	(m^3/year)	(av ft^3/min)
2029	6.344E+03	5.080E+06	3.413E+02	1.694E+03	2.540E+06	1.706E+02
2030	6.095E+03	4.880E+06	3.279E+02	1.628E+03	2.440E+06	1.640E+02
2031	5.856E+03	4.689E+06	3.151E+02	1.564E+03	2.345E+06	1.575E+02
2032	5.626E+03	4.505E+06	3.027E+02	1.503E+03	2.253E+06	1.514E+02
2033	5.406E+03	4.329E+06	2.908E+02	1.444E+03	2.164E+06	1.454E+02
2034	5.194E+03	4.159E+06	2.794E+02	1.387E+03	2.079E+06	1.397E+02
2035	4.990E+03	3.996E+06	2.685E+02	1.333E+03	1.998E+06	1.342E+02
2036	4.794E+03	3.839E+06	2.579E+02	1.281E+03	1.920E+06	1.290E+02
2037	4.606E+03	3.689E+06	2.478E+02	1.230E+03	1.844E+06	1.239E+02
2038	4.426E+03	3.544E+06	2.381E+02	1.182E+03	1.772E+06	1.191E+02
2039	4.252E+03	3.405E+06	2.288E+02	1.136E+03	1.702E+06	1.144E+02
2040	4.085E+03	3.271E+06	2.198E+02	1.091E+03	1.636E+06	1.099E+02
2041	3.925E+03	3.143E+06	2.112E+02	1.048E+03	1.572E+06	1.056E+02
2042	3.771E+03	3.020E+06	2.029E+02	1.007E+03	1.510E+06	1.015E+02
2043	3.623E+03	2.902E+06	1.950E+02	9.679E+02	1.451E+06	9.748E+01
2044	3.481E+03	2.788E+06	1.873E+02	9.299E+02	1.394E+06	9.365E+01
2045	3.345E+03	2.678E+06	1.800E+02	8.935E+02	1.339E+06	8.998E+01
2046	3.214E+03	2.573E+06	1.729E+02	8.584E+02	1.287E+06	8.645E+01
2047	3.088E+03	2.473E+06	1.661E+02	8.248E+02	1.236E+06	8.306E+01
2048	2.967E+03	2.376E+06	1.596E+02	7.924E+02	1.188E+06	7.981E+01
2049	2.850E+03	2.282E+06	1.534E+02	7.614E+02	1.141E+06	7.668E+01
2050	2.739E+03	2.193E+06	1.473E+02	7.315E+02	1.096E+06	7.367E+01
2051	2.631E+03	2.107E+06	1.416E+02	7.028E+02	1.053E+06	7.078E+01
2052	2.528E+03	2.024E+06	1.360E+02	6.753E+02	1.012E+06	6.801E+01
2053	2.429E+03	1.945E+06	1.307E+02	6.488E+02	9.725E+05	6.534E+01
2054	2.334E+03	1.869E+06	1.256E+02	6.233E+02	9.343E+05	6.278E+01
2055	2.242E+03	1.795E+06	1.206E+02	5.989E+02	8.977E+05	6.032E+01
2056	2.154E+03	1.725E+06	1.159E+02	5.754E+02	8.625E+05	5.795E+01
2057	2.070E+03	1.657E+06	1.114E+02	5.529E+02	8.287E+05	5.568E+01
2058	1.989E+03	1.592E+06	1.070E+02	5.312E+02	7.962E+05	5.350E+01
2059	1.911E+03	1.530E+06	1.028E+02	5.104E+02	7.650E+05	5.140E+01
2060	1.836E+03	1.470E+06	9.877E+01	4.903E+02	7.350E+05	4.938E+01
2061	1.764E+03	1.412E+06	9.489E+01	4.711E+02	7.062E+05	4.745E+01
2062	1.695E+03	1.357E+06	9.117E+01	4.526E+02	6.785E+05	4.559E+01
2063	1.628E+03	1.304E+06	8.760E+01	4.349E+02	6.519E+05	4.380E+01
2064	1.564E+03	1.253E+06	8.416E+01	4.178E+02	6.263E+05	4.208E+01
2065	1.503E+03	1.204E+06	8.086E+01	4.015E+02	6.018E+05	4.043E+01
2066	1.444E+03	1.156E+06	7.769E+01	3.857E+02	5.782E+05	3.885E+01
2067	1.387E+03	1.111E+06	7.465E+01	3.706E+02	5.555E+05	3.732E+01
2068	1.333E+03	1.067E+06	7.172E+01	3.561E+02	5.337E+05	3.586E+01
2069	1.281E+03	1.026E+06	6.891E+01	3.421E+02	5.128E+05	3.445E+01
2070	1.231E+03	9.853E+05	6.621E+01	3.287E+02	4.927E+05	3.310E+01
2071	1.182E+03	9.467E+05	6.361E+01	3.158E+02	4.734E+05	3.180E+01
2072	1.136E+03	9.096E+05	6.112E+01	3.034E+02	4.548E+05	3.056E+01
2073	1.091E+03	8.739E+05	5.872E+01	2.915E+02	4.370E+05	2.936E+01
2074	1.049E+03	8.397E+05	5.642E+01	2.801E+02	4.198E+05	2.821E+01
2075	1.007E+03	8.067E+05	5.420E+01	2.691E+02	4.034E+05	2.710E+01
2076	9.680E+02	7.751E+05	5.208E+01	2.586E+02	3.875E+05	2.604E+01
2077	9.300E+02	7.447E+05	5.004E+01	2.484E+02	3.724E+05	2.502E+01
2078	8.935E+02	7.155E+05	4.807E+01	2.387E+02	3.578E+05	2.404E+01
2079	8.585E+02	6.875E+05	4.619E+01	2.293E+02	3.437E+05	2.309E+01

Results (Continued)

Year	Total landfill gas			Methane		
	(Mg/year)	(m^3/year)	(av ft^3/min)	(Mg/year)	(m^3/year)	(av ft^3/min)
2080	8.248E+02	6.605E+05	4.438E+01	2.203E+02	3.302E+05	2.219E+01
2081	7.925E+02	6.346E+05	4.264E+01	2.117E+02	3.173E+05	2.132E+01
2082	7.614E+02	6.097E+05	4.097E+01	2.034E+02	3.049E+05	2.048E+01
2083	7.316E+02	5.858E+05	3.936E+01	1.954E+02	2.929E+05	1.968E+01
2084	7.029E+02	5.628E+05	3.782E+01	1.877E+02	2.814E+05	1.891E+01
2085	6.753E+02	5.408E+05	3.633E+01	1.804E+02	2.704E+05	1.817E+01
2086	6.488E+02	5.196E+05	3.491E+01	1.733E+02	2.598E+05	1.745E+01
2087	6.234E+02	4.992E+05	3.354E+01	1.665E+02	2.496E+05	1.677E+01
2088	5.990E+02	4.796E+05	3.223E+01	1.600E+02	2.398E+05	1.611E+01
2089	5.755E+02	4.608E+05	3.096E+01	1.537E+02	2.304E+05	1.548E+01
2090	5.529E+02	4.427E+05	2.975E+01	1.477E+02	2.214E+05	1.487E+01
2091	5.312E+02	4.254E+05	2.858E+01	1.419E+02	2.127E+05	1.429E+01
2092	5.104E+02	4.087E+05	2.746E+01	1.363E+02	2.044E+05	1.373E+01
2093	4.904E+02	3.927E+05	2.638E+01	1.310E+02	1.963E+05	1.319E+01
2094	4.712E+02	3.773E+05	2.535E+01	1.259E+02	1.886E+05	1.267E+01
2095	4.527E+02	3.625E+05	2.436E+01	1.209E+02	1.812E+05	1.218E+01
2096	4.349E+02	3.483E+05	2.340E+01	1.162E+02	1.741E+05	1.170E+01
2097	4.179E+02	3.346E+05	2.248E+01	1.116E+02	1.673E+05	1.124E+01
2098	4.015E+02	3.215E+05	2.160E+01	1.072E+02	1.607E+05	1.080E+01
2099	3.858E+02	3.089E+05	2.075E+01	1.030E+02	1.544E+05	1.038E+01
2100	3.706E+02	2.968E+05	1.994E+01	9.900E+01	1.484E+05	9.970E+00
2101	3.561E+02	2.851E+05	1.916E+01	9.512E+01	1.426E+05	9.579E+00
2102	3.421E+02	2.740E+05	1.841E+01	9.139E+01	1.370E+05	9.204E+00
2103	3.287E+02	2.632E+05	1.769E+01	8.780E+01	1.316E+05	8.843E+00
2104	3.158E+02	2.529E+05	1.699E+01	8.436E+01	1.264E+05	8.496E+00
2105	3.034E+02	2.430E+05	1.633E+01	8.105E+01	1.215E+05	8.163E+00
2106	2.915E+02	2.335E+05	1.569E+01	7.787E+01	1.167E+05	7.843E+00
2107	2.801E+02	2.243E+05	1.507E+01	7.482E+01	1.122E+05	7.535E+00
2108	2.691E+02	2.155E+05	1.448E+01	7.189E+01	1.078E+05	7.240E+00
2109	2.586E+02	2.071E+05	1.391E+01	6.907E+01	1.035E+05	6.956E+00
2110	2.484E+02	1.989E+05	1.337E+01	6.636E+01	9.947E+04	6.683E+00
2111	2.387E+02	1.911E+05	1.284E+01	6.376E+01	9.557E+04	6.421E+00
2112	2.293E+02	1.836E+05	1.234E+01	6.126E+01	9.182E+04	6.169E+00
2113	2.203E+02	1.764E+05	1.186E+01	5.886E+01	8.822E+04	5.928E+00
2114	2.117E+02	1.695E+05	1.139E+01	5.655E+01	8.476E+04	5.695E+00
2115	2.034E+02	1.629E+05	1.094E+01	5.433E+01	8.144E+04	5.472E+00
2116	1.954E+02	1.565E+05	1.051E+01	5.220E+01	7.824E+04	5.257E+00
2117	1.878E+02	1.504E+05	1.010E+01	5.015E+01	7.518E+04	5.051E+00
2118	1.804E+02	1.445E+05	9.706E+00	4.819E+01	7.223E+04	4.853E+00
2119	1.733E+02	1.388E+05	9.326E+00	4.630E+01	6.940E+04	4.663E+00

Results (Continued)

Year	Carbon dioxide			NMOC		
	(Mg/year)	(m^3/year)	(av ft^3/min)	(Mg/year)	(m^3/year)	(av ft^3/min)
1979	0	0	0	0	0	0
1980	9.307E+02	5.084E+05	3.416E+01	1.458E+01	4.067E+03	2.733E-01
1981	1.827E+03	9.980E+05	6.706E+01	2.862E+01	7.984E+03	5.364E-01
1982	2.682E+03	1.465E+06	9.843E+01	4.201E+01	1.172E+04	7.874E-01
1983	4.192E+03	2.290E+06	1.539E+02	6.567E+01	1.832E+04	1.231E+00
1984	5.643E+03	3.083E+06	2.071E+02	8.840E+01	2.466E+04	1.657E+00
1985	7.037E+03	3.844E+06	2.583E+02	1.102E+02	3.075E+04	2.066E+00
1986	6.761E+03	3.693E+06	2.482E+02	1.059E+02	2.955E+04	1.985E+00
1987	6.496E+03	3.549E+06	2.384E+02	1.018E+02	2.839E+04	1.907E+00
1988	6.241E+03	3.410E+06	2.291E+02	9.777E+01	2.728E+04	1.833E+00
1989	5.996E+03	3.276E+06	2.201E+02	9.394E+01	2.621E+04	1.761E+00
1990	5.761E+03	3.147E+06	2.115E+02	9.025E+01	2.518E+04	1.692E+00
1991	5.535E+03	3.024E+06	2.032E+02	8.671E+01	2.419E+04	1.625E+00
1992	5.318E+03	2.905E+06	1.952E+02	8.331E+01	2.324E+04	1.562E+00
1993	5.110E+03	2.791E+06	1.876E+02	8.005E+01	2.233E+04	1.500E+00
1994	4.909E+03	2.682E+06	1.802E+02	7.691E+01	2.146E+04	1.442E+00
1995	4.717E+03	2.577E+06	1.731E+02	7.389E+01	2.061E+04	1.385E+00
1996	5.526E+03	3.019E+06	2.028E+02	8.657E+01	2.415E+04	1.623E+00
1997	6.421E+03	3.508E+06	2.357E+02	1.006E+02	2.806E+04	1.886E+00
1998	7.414E+03	4.050E+06	2.721E+02	1.161E+02	3.240E+04	2.177E+00
1999	8.369E+03	4.572E+06	3.072E+02	1.311E+02	3.658E+04	2.458E+00
2000	9.461E+03	5.169E+06	3.473E+02	1.482E+02	4.135E+04	2.778E+00
2001	1.058E+04	5.782E+06	3.885E+02	1.658E+02	4.626E+04	3.108E+00
2002	1.190E+04	6.500E+06	4.367E+02	1.864E+02	5.200E+04	3.494E+00
2003	1.248E+04	6.815E+06	4.579E+02	1.954E+02	5.452E+04	3.663E+00
2004	1.224E+04	6.689E+06	4.494E+02	1.918E+02	5.351E+04	3.596E+00
2005	1.214E+04	6.633E+06	4.457E+02	1.902E+02	5.307E+04	3.565E+00
2006	1.167E+04	6.373E+06	4.282E+02	1.828E+02	5.098E+04	3.426E+00
2007	1.121E+04	6.123E+06	4.114E+02	1.756E+02	4.899E+04	3.291E+00
2008	1.077E+04	5.883E+06	3.953E+02	1.687E+02	4.707E+04	3.162E+00
2009	1.035E+04	5.652E+06	3.798E+02	1.621E+02	4.522E+04	3.038E+00
2010	9.941E+03	5.431E+06	3.649E+02	1.557E+02	4.345E+04	2.919E+00
2011	9.551E+03	5.218E+06	3.506E+02	1.496E+02	4.174E+04	2.805E+00
2012	9.177E+03	5.013E+06	3.368E+02	1.438E+02	4.011E+04	2.695E+00
2013	8.817E+03	4.817E+06	3.236E+02	1.381E+02	3.853E+04	2.589E+00
2014	8.471E+03	4.628E+06	3.109E+02	1.327E+02	3.702E+04	2.488E+00
2015	8.139E+03	4.446E+06	2.988E+02	1.275E+02	3.557E+04	2.390E+00
2016	7.820E+03	4.272E+06	2.870E+02	1.225E+02	3.418E+04	2.296E+00
2017	7.513E+03	4.105E+06	2.758E+02	1.177E+02	3.284E+04	2.206E+00
2018	7.219E+03	3.944E+06	2.650E+02	1.131E+02	3.155E+04	2.120E+00
2019	6.936E+03	3.789E+06	2.546E+02	1.087E+02	3.031E+04	2.037E+00
2020	6.664E+03	3.640E+06	2.446E+02	1.044E+02	2.912E+04	1.957E+00
2021	6.402E+03	3.498E+06	2.350E+02	1.003E+02	2.798E+04	1.880E+00
2022	6.151E+03	3.360E+06	2.258E+02	9.636E+01	2.688E+04	1.806E+00
2023	5.910E+03	3.229E+06	2.169E+02	9.259E+01	2.583E+04	1.736E+00
2024	5.678E+03	3.102E+06	2.084E+02	8.896E+01	2.482E+04	1.667E+00
2025	5.456E+03	2.980E+06	2.003E+02	8.547E+01	2.384E+04	1.602E+00
2026	5.242E+03	2.864E+06	1.924E+02	8.212E+01	2.291E+04	1.539E+00
2027	5.036E+03	2.751E+06	1.849E+02	7.890E+01	2.201E+04	1.479E+00
2028	4.839E+03	2.643E+06	1.776E+02	7.580E+01	2.115E+04	1.421E+00

Results (Continued)

Year	Carbon dioxide			NMOC		
	(Mg/year)	(m^3/year)	(av ft^3/min)	(Mg/year)	(m^3/year)	(av ft^3/min)
2029	4.649E+03	2.540E+06	1.706E+02	7.283E+01	2.032E+04	1.365E+00
2030	4.467E+03	2.440E+06	1.640E+02	6.998E+01	1.952E+04	1.312E+00
2031	4.292E+03	2.345E+06	1.575E+02	6.723E+01	1.876E+04	1.260E+00
2032	4.123E+03	2.253E+06	1.514E+02	6.460E+01	1.802E+04	1.211E+00
2033	3.962E+03	2.164E+06	1.454E+02	6.206E+01	1.731E+04	1.163E+00
2034	3.806E+03	2.079E+06	1.397E+02	5.963E+01	1.664E+04	1.118E+00
2035	3.657E+03	1.998E+06	1.342E+02	5.729E+01	1.598E+04	1.074E+00
2036	3.514E+03	1.920E+06	1.290E+02	5.504E+01	1.536E+04	1.032E+00
2037	3.376E+03	1.844E+06	1.239E+02	5.289E+01	1.475E+04	9.913E-01
2038	3.244E+03	1.772E+06	1.191E+02	5.081E+01	1.418E+04	9.525E-01
2039	3.116E+03	1.702E+06	1.144E+02	4.882E+01	1.362E+04	9.151E-01
2040	2.994E+03	1.636E+06	1.099E+02	4.691E+01	1.309E+04	8.792E-01
2041	2.877E+03	1.572E+06	1.056E+02	4.507E+01	1.257E+04	8.448E-01
2042	2.764E+03	1.510E+06	1.015E+02	4.330E+01	1.208E+04	8.116E-01
2043	2.656E+03	1.451E+06	9.748E+01	4.160E+01	1.161E+04	7.798E-01
2044	2.551E+03	1.394E+06	9.365E+01	3.997E+01	1.115E+04	7.492E-01
2045	2.451E+03	1.339E+06	8.998E+01	3.840E+01	1.071E+04	7.199E-01
2046	2.355E+03	1.287E+06	8.645E+01	3.690E+01	1.029E+04	6.916E-01
2047	2.263E+03	1.236E+06	8.306E+01	3.545E+01	9.890E+03	6.645E-01
2048	2.174E+03	1.188E+06	7.981E+01	3.406E+01	9.502E+03	6.385E-01
2049	2.089E+03	1.141E+06	7.668E+01	3.273E+01	9.130E+03	6.134E-01
2050	2.007E+03	1.096E+06	7.367E+01	3.144E+01	8.772E+03	5.894E-01
2051	1.928E+03	1.053E+06	7.078E+01	3.021E+01	8.428E+03	5.663E-01
2052	1.853E+03	1.012E+06	6.801E+01	2.902E+01	8.097E+03	5.441E-01
2053	1.780E+03	9.725E+05	6.534E+01	2.789E+01	7.780E+03	5.227E-01
2054	1.710E+03	9.343E+05	6.278E+01	2.679E+01	7.475E+03	5.022E-01
2055	1.643E+03	8.977E+05	6.032E+01	2.574E+01	7.182E+03	4.825E-01
2056	1.579E+03	8.625E+05	5.795E+01	2.473E+01	6.900E+03	4.636E-01
2057	1.517E+03	8.287E+05	5.568E+01	2.376E+01	6.630E+03	4.454E-01
2058	1.457E+03	7.962E+05	5.350E+01	2.283E+01	6.370E+03	4.280E-01
2059	1.400E+03	7.650E+05	5.140E+01	2.194E+01	6.120E+03	4.112E-01
2060	1.345E+03	7.350E+05	4.938E+01	2.108E+01	5.880E+03	3.951E-01
2061	1.293E+03	7.062E+05	4.745E+01	2.025E+01	5.649E+03	3.796E-01
2062	1.242E+03	6.785E+05	4.559E+01	1.946E+01	5.428E+03	3.647E-01
2063	1.193E+03	6.519E+05	4.380E+01	1.869E+01	5.215E+03	3.504E-01
2064	1.146E+03	6.263E+05	4.208E+01	1.796E+01	5.010E+03	3.367E-01
2065	1.102E+03	6.018E+05	4.043E+01	1.726E+01	4.814E+03	3.235E-01
2066	1.058E+03	5.782E+05	3.885E+01	1.658E+01	4.625E+03	3.108E-01
2067	1.017E+03	5.555E+05	3.732E+01	1.593E+01	4.444E+03	2.986E-01
2068	9.769E+02	5.337E+05	3.586E+01	1.530E+01	4.270E+03	2.869E-01
2069	9.386E+02	5.128E+05	3.445E+01	1.470E+01	4.102E+03	2.756E-01
2070	9.018E+02	4.927E+05	3.310E+01	1.413E+01	3.941E+03	2.648E-01
2071	8.665E+02	4.734E+05	3.180E+01	1.357E+01	3.787E+03	2.544E-01
2072	8.325E+02	4.548E+05	3.056E+01	1.304E+01	3.638E+03	2.445E-01
2073	7.999E+02	4.370E+05	2.936E+01	1.253E+01	3.496E+03	2.349E-01
2074	7.685E+02	4.198E+05	2.821E+01	1.204E+01	3.359E+03	2.257E-01
2075	7.384E+02	4.034E+05	2.710E+01	1.157E+01	3.227E+03	2.168E-01
2076	7.094E+02	3.875E+05	2.604E+01	1.111E+01	3.100E+03	2.083E-01
2077	6.816E+02	3.724E+05	2.502E+01	1.068E+01	2.979E+03	2.001E-01
2078	6.549E+02	3.578E+05	2.404E+01	1.026E+01	2.862E+03	1.923E-01
2079	6.292E+02	3.437E+05	2.309E+01	9.857E+00	2.750E+03	1.848E-01

Results (Continued)

Year	Carbon dioxide			NMOC		
	(Mg/year)	(m^3/year)	(av ft^3/min)	(Mg/year)	(m^3/year)	(av ft^3/min)
2080	6.045E+02	3.302E+05	2.219E+01	9.470E+00	2.642E+03	1.775E-01
2081	5.808E+02	3.173E+05	2.132E+01	9.099E+00	2.538E+03	1.706E-01
2082	5.580E+02	3.049E+05	2.048E+01	8.742E+00	2.439E+03	1.639E-01
2083	5.362E+02	2.929E+05	1.968E+01	8.399E+00	2.343E+03	1.574E-01
2084	5.151E+02	2.814E+05	1.891E+01	8.070E+00	2.251E+03	1.513E-01
2085	4.949E+02	2.704E+05	1.817E+01	7.753E+00	2.163E+03	1.453E-01
2086	4.755E+02	2.598E+05	1.745E+01	7.449E+00	2.078E+03	1.396E-01
2087	4.569E+02	2.496E+05	1.677E+01	7.157E+00	1.997E+03	1.342E-01
2088	4.390E+02	2.398E+05	1.611E+01	6.877E+00	1.918E+03	1.289E-01
2089	4.218E+02	2.304E+05	1.548E+01	6.607E+00	1.843E+03	1.238E-01
2090	4.052E+02	2.214E+05	1.487E+01	6.348E+00	1.771E+03	1.190E-01
2091	3.893E+02	2.127E+05	1.429E+01	6.099E+00	1.702E+03	1.143E-01
2092	3.741E+02	2.044E+05	1.373E+01	5.860E+00	1.635E+03	1.098E-01
2093	3.594E+02	1.963E+05	1.319E+01	5.630E+00	1.571E+03	1.055E-01
2094	3.453E+02	1.886E+05	1.267E+01	5.409E+00	1.509E+03	1.014E-01
2095	3.318E+02	1.812E+05	1.218E+01	5.197E+00	1.450E+03	9.742E-02
2096	3.188E+02	1.741E+05	1.170E+01	4.994E+00	1.393E+03	9.360E-02
2097	3.063E+02	1.673E+05	1.124E+01	4.798E+00	1.338E+03	8.993E-02
2098	2.943E+02	1.607E+05	1.080E+01	4.610E+00	1.286E+03	8.641E-02
2099	2.827E+02	1.544E+05	1.038E+01	4.429E+00	1.236E+03	8.302E-02
2100	2.716E+02	1.484E+05	9.970E+00	4.255E+00	1.187E+03	7.976E-02
2101	2.610E+02	1.426E+05	9.579E+00	4.088E+00	1.141E+03	7.663E-02
2102	2.507E+02	1.370E+05	9.204E+00	3.928E+00	1.096E+03	7.363E-02
2103	2.409E+02	1.316E+05	8.843E+00	3.774E+00	1.053E+03	7.074E-02
2104	2.315E+02	1.264E+05	8.496E+00	3.626E+00	1.012E+03	6.797E-02
2105	2.224E+02	1.215E+05	8.163E+00	3.484E+00	9.719E+02	6.530E-02
2106	2.137E+02	1.167E+05	7.843E+00	3.347E+00	9.338E+02	6.274E-02
2107	2.053E+02	1.122E+05	7.535E+00	3.216E+00	8.972E+02	6.028E-02
2108	1.972E+02	1.078E+05	7.240E+00	3.090E+00	8.620E+02	5.792E-02
2109	1.895E+02	1.035E+05	6.956E+00	2.969E+00	8.282E+02	5.565E-02
2110	1.821E+02	9.947E+04	6.683E+00	2.852E+00	7.958E+02	5.347E-02
2111	1.749E+02	9.557E+04	6.421E+00	2.740E+00	7.645E+02	5.137E-02
2112	1.681E+02	9.182E+04	6.169E+00	2.633E+00	7.346E+02	4.936E-02
2113	1.615E+02	8.822E+04	5.928E+00	2.530E+00	7.058E+02	4.742E-02
2114	1.552E+02	8.476E+04	5.695E+00	2.431E+00	6.781E+02	4.556E-02
2115	1.491E+02	8.144E+04	5.472E+00	2.335E+00	6.515E+02	4.377E-02
2116	1.432E+02	7.824E+04	5.257E+00	2.244E+00	6.260E+02	4.206E-02
2117	1.376E+02	7.518E+04	5.051E+00	2.156E+00	6.014E+02	4.041E-02
2118	1.322E+02	7.223E+04	4.853E+00	2.071E+00	5.778E+02	3.882E-02
2119	1.270E+02	6.940E+04	4.663E+00	1.990E+00	5.552E+02	3.730E-02



Summary Report

Landfill Name or Identifier: Bridgeton South Quarry 082313

Date: Friday, September 27, 2013

Description/Comments:
Period of operation is estimated between approximately 1985 and 2004 based on site information. Volume is approximately 12.54 million cubic yards or approximately 10.2 million tons at a density of 1629 lb/cyd. Waste intake rates approximated from multiple source documents provided by others.

About LandGEM:

First-Order Decomposition Rate Equation:

$$Q_{CH_4} = \sum_{i=1}^{n} \sum_{j=0.1}^{1} kL_o \left(\frac{M_i}{10}\right) e^{-kt_{ij}}$$

Where,
Q_{CH4} = annual methane generation in the year of the calculation ($m^3/year$)
i = 1-year time increment
n = (year of the calculation) - (initial year of waste acceptance)
j = 0.1-year time increment
k = methane generation rate ($year^{-1}$)
L_o = potential methane generation capacity (m^3/Mg)
M_i = mass of waste accepted in the ith year (Mg)
t_{ij} = age of the jth section of waste mass M_i accepted in the ith year (*decimal years*, e.g., 3.2 years)

LandGEM is based on a first-order decomposition rate equation for quantifying emissions from the decomposition of landfilled waste in municipal solid waste (MSW) landfills. The software provides a relatively simple approach to estimating landfill gas emissions. Model defaults are based on empirical data from U.S. landfills. Field test data can also be used in place of model defaults when available. Further guidance on EPA test methods, Clean Air Act (CAA) regulations, and other guidance regarding landfill gas emissions and control technology requirements can be found at http://www.epa.gov/ttnatw01/landfill/landflpg.html.

LandGEM is considered a screening tool — the better the input data, the better the estimates. Often, there are limitations with the available data regarding waste quantity and composition, variation in design and operating practices over time, and changes occurring over time that impact the emissions potential. Changes to landfill operation, such as operating under wet conditions through leachate recirculation or other liquid additions, will result in generating more gas at a faster rate. Defaults for estimating emissions for this type of operation are being developed to include in LandGEM along with defaults for convential landfills (no leachate or liquid additions) for developing emission inventories and determining CAA applicability. Refer to the Web site identified above for future updates.

Input Review

LANDFILL CHARACTERISTICS

Landfill Open Year	**1985**	
Landfill Closure Year (with 80-year limit)	**2004**	
Actual Closure Year (without limit)	***2004***	
Have Model Calculate Closure Year?	**No**	
Waste Design Capacity	**10,222,592**	*short tons*

MODEL PARAMETERS

Methane Generation Rate, k	**0.040**	*year^{-1}*
Potential Methane Generation Capacity, L_o	**100**	*m^3/Mg*
NMOC Concentration	**4,000**	*ppmv as hexane*
Methane Content	**50**	*% by volume*

GASES / POLLUTANTS SELECTED

Gas / Pollutant #1:	**Total landfill gas**
Gas / Pollutant #2:	**Methane**
Gas / Pollutant #3:	**Carbon dioxide**
Gas / Pollutant #4:	**NMOC**

WASTE ACCEPTANCE RATES

Year	Waste Accepted		Waste-In-Place	
	(Mg/year)	*(short tons/year)*	*(Mg)*	*(short tons)*
1985	224,604	247,064	0	0
1986	463,692	510,061	224,604	247,064
1987	463,692	510,061	688,295	757,125
1988	463,692	510,061	1,151,987	1,267,186
1989	368,498	405,348	1,615,679	1,777,247
1990	571,257	628,383	1,984,177	2,182,595
1991	403,000	443,300	2,555,435	2,810,978
1992	416,239	457,863	2,958,435	3,254,278
1993	415,275	456,803	3,374,674	3,712,141
1994	420,382	462,420	3,789,949	4,168,944
1995	462,832	509,115	4,210,331	4,631,364
1996	517,487	569,236	4,673,163	5,140,479
1997	579,326	637,259	5,190,649	5,709,714
1998	579,961	637,957	5,769,976	6,346,973
1999	661,212	727,333	6,349,937	6,984,931
2000	695,298	764,828	7,011,149	7,712,263
2001	804,859	885,344	7,706,447	8,477,091
2002	485,790	534,368	8,511,305	9,362,436
2003	120,285	132,314	8,997,095	9,896,804
2004	175,886	193,474	9,117,380	10,029,118
2005	0	0	9,293,265	10,222,592
2006	0	0	9,293,265	10,222,592
2007	0	0	9,293,265	10,222,592
2008	0	0	9,293,265	10,222,592
2009	0	0	9,293,265	10,222,592
2010	0	0	9,293,265	10,222,592
2011	0	0	9,293,265	10,222,592
2012	0	0	9,293,265	10,222,592
2013	0	0	9,293,265	10,222,592
2014	0	0	9,293,265	10,222,592
2015	0	0	9,293,265	10,222,592
2016	0	0	9,293,265	10,222,592
2017	0	0	9,293,265	10,222,592
2018	0	0	9,293,265	10,222,592
2019	0	0	9,293,265	10,222,592
2020	0	0	9,293,265	10,222,592
2021	0	0	9,293,265	10,222,592
2022	0	0	9,293,265	10,222,592
2023	0	0	9,293,265	10,222,592
2024	0	0	9,293,265	10,222,592

WASTE ACCEPTANCE RATES (Continued)

Year	Waste Accepted		Waste-In-Place	
	(Mg/year)	*(short tons/year)*	*(Mg)*	*(short tons)*
2025	0	0	9,293,265	10,222,592
2026	0	0	9,293,265	10,222,592
2027	0	0	9,293,265	10,222,592
2028	0	0	9,293,265	10,222,592
2029	0	0	9,293,265	10,222,592
2030	0	0	9,293,265	10,222,592
2031	0	0	9,293,265	10,222,592
2032	0	0	9,293,265	10,222,592
2033	0	0	9,293,265	10,222,592
2034	0	0	9,293,265	10,222,592
2035	0	0	9,293,265	10,222,592
2036	0	0	9,293,265	10,222,592
2037	0	0	9,293,265	10,222,592
2038	0	0	9,293,265	10,222,592
2039	0	0	9,293,265	10,222,592
2040	0	0	9,293,265	10,222,592
2041	0	0	9,293,265	10,222,592
2042	0	0	9,293,265	10,222,592
2043	0	0	9,293,265	10,222,592
2044	0	0	9,293,265	10,222,592
2045	0	0	9,293,265	10,222,592
2046	0	0	9,293,265	10,222,592
2047	0	0	9,293,265	10,222,592
2048	0	0	9,293,265	10,222,592
2049	0	0	9,293,265	10,222,592
2050	0	0	9,293,265	10,222,592
2051	0	0	9,293,265	10,222,592
2052	0	0	9,293,265	10,222,592
2053	0	0	9,293,265	10,222,592
2054	0	0	9,293,265	10,222,592
2055	0	0	9,293,265	10,222,592
2056	0	0	9,293,265	10,222,592
2057	0	0	9,293,265	10,222,592
2058	0	0	9,293,265	10,222,592
2059	0	0	9,293,265	10,222,592
2060	0	0	9,293,265	10,222,592
2061	0	0	9,293,265	10,222,592
2062	0	0	9,293,265	10,222,592
2063	0	0	9,293,265	10,222,592
2064	0	0	9,293,265	10,222,592

Pollutant Parameters

		Gas / Pollutant Default Parameters:		*User-specified Pollutant Parameters:*	
	Compound	Concentration (*ppmv*)	Molecular Weight	Concentration (*ppmv*)	Molecular Weight
Gases	Total landfill gas		0.00		
	Methane		16.04		
	Carbon dioxide		44.01		
	NMOC	4,000	86.18		
Pollutants	1,1,1-Trichloroethane (methyl chloroform) - HAP	0.48	133.41		
	1,1,2,2-Tetrachloroethane - HAP/VOC	1.1	167.85		
	1,1-Dichloroethane (ethylidene dichloride) - HAP/VOC	2.4	98.97		
	1,1-Dichloroethene (vinylidene chloride) - HAP/VOC	0.20	96.94		
	1,2-Dichloroethane (ethylene dichloride) - HAP/VOC	0.41	98.96		
	1,2-Dichloropropane (propylene dichloride) - HAP/VOC	0.18	112.99		
	2-Propanol (isopropyl alcohol) - VOC	50	60.11		
	Acetone	7.0	58.08		
	Acrylonitrile - HAP/VOC	6.3	53.06		
	Benzene - No or Unknown Co-disposal - HAP/VOC	1.9	78.11		
	Benzene - Co-disposal - HAP/VOC	11	78.11		
	Bromodichloromethane - VOC	3.1	163.83		
	Butane - VOC	5.0	58.12		
	Carbon disulfide - HAP/VOC	0.58	76.13		
	Carbon monoxide	140	28.01		
	Carbon tetrachloride - HAP/VOC	4.0E-03	153.84		
	Carbonyl sulfide - HAP/VOC	0.49	60.07		
	Chlorobenzene - HAP/VOC	0.25	112.56		
	Chlorodifluoromethane	1.3	86.47		
	Chloroethane (ethyl chloride) - HAP/VOC	1.3	64.52		
	Chloroform - HAP/VOC	0.03	119.39		
	Chloromethane - VOC	1.2	50.49		
	Dichlorobenzene - (HAP for para isomer/VOC)	0.21	147		
	Dichlorodifluoromethane	16	120.91		
	Dichlorofluoromethane - VOC	2.6	102.92		
	Dichloromethane (methylene chloride) - HAP	14	84.94		
	Dimethyl sulfide (methyl sulfide) - VOC	7.8	62.13		
	Ethane	890	30.07		
	Ethanol - VOC	27	46.08		

Pollutant Parameters (Continued)

		Gas / Pollutant Default Parameters:		*User-specified Pollutant Parameters:*	
	Compound	Concentration (*ppmv*)	Molecular Weight	Concentration (*ppmv*)	Molecular Weight
Pollutants	Ethyl mercaptan (ethanethiol) - VOC	2.3	62.13		
	Ethylbenzene - HAP/VOC	4.6	106.16		
	Ethylene dibromide - HAP/VOC	1.0E-03	187.88		
	Fluorotrichloromethane - VOC	0.76	137.38		
	Hexane - HAP/VOC	6.6	86.18		
	Hydrogen sulfide	36	34.08		
	Mercury (total) - HAP	2.9E-04	200.61		
	Methyl ethyl ketone - HAP/VOC	7.1	72.11		
	Methyl isobutyl ketone - HAP/VOC	1.9	100.16		
	Methyl mercaptan - VOC	2.5	48.11		
	Pentane - VOC	3.3	72.15		
	Perchloroethylene (tetrachloroethylene) - HAP	3.7	165.83		
	Propane - VOC	11	44.09		
	t-1,2-Dichloroethene - VOC	2.8	96.94		
	Toluene - No or Unknown Co-disposal - HAP/VOC	39	92.13		
	Toluene - Co-disposal - HAP/VOC	170	92.13		
	Trichloroethylene (trichloroethene) - HAP/VOC	2.8	131.40		
	Vinyl chloride - HAP/VOC	7.3	62.50		
	Xylenes - HAP/VOC	12	106.16		

Graphs

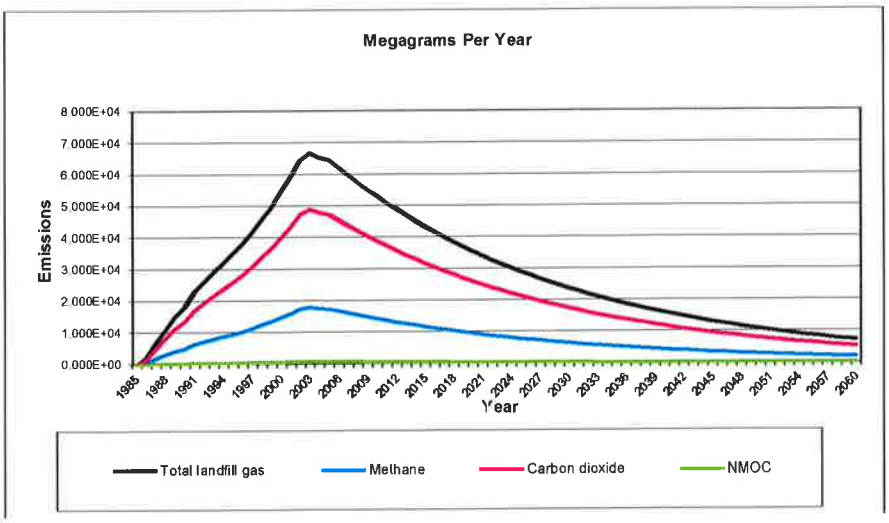
Megagrams Per Year
Emissions
8.000E+04
7.000E+04
6.000E+04
5.000E+04
4.000E+04
3.000E+04
2.000E+04
1.000E+04
0.000E+00
1985 1988 1991 1994 1997 2000 2003 2006 2009 2012 2015 2018 2021 2024 2027 2030 2033 2036 2039 2042 2045 2048 2051 2054 2057 2060
Year
Total landfill gas
Methane
Carbon dioxide
NMOC

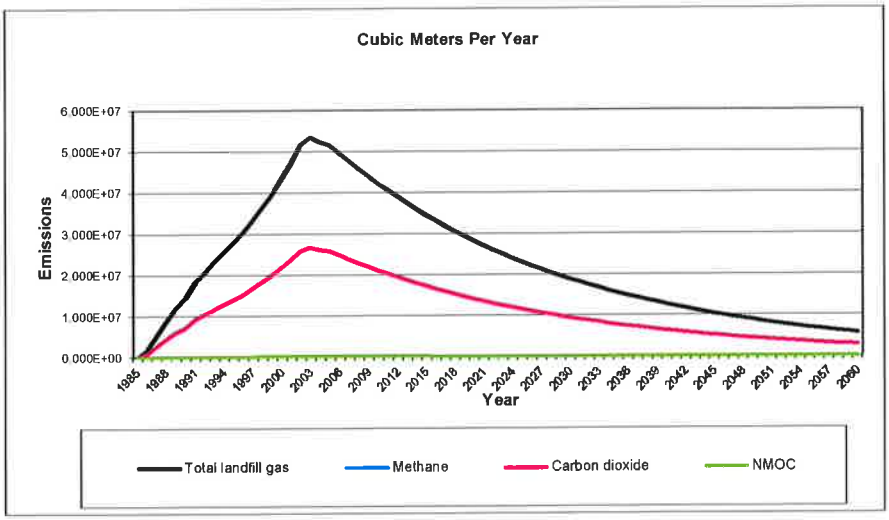
Cubic Meters Per Year
Emissions
6.000E+07
5.000E+07
4.000E+07
3.000E+07
2.000E+07
1.000E+07
0.000E+00
1985 1988 1991 1994 1997 2000 2003 2006 2009 2012 2015 2018 2021 2024 2027 2030 2033 2036 2039 2042 2045 2048 2051 2054 2057 2060
Year
Total landfill gas
Methane
Carbon dioxide
NMOC

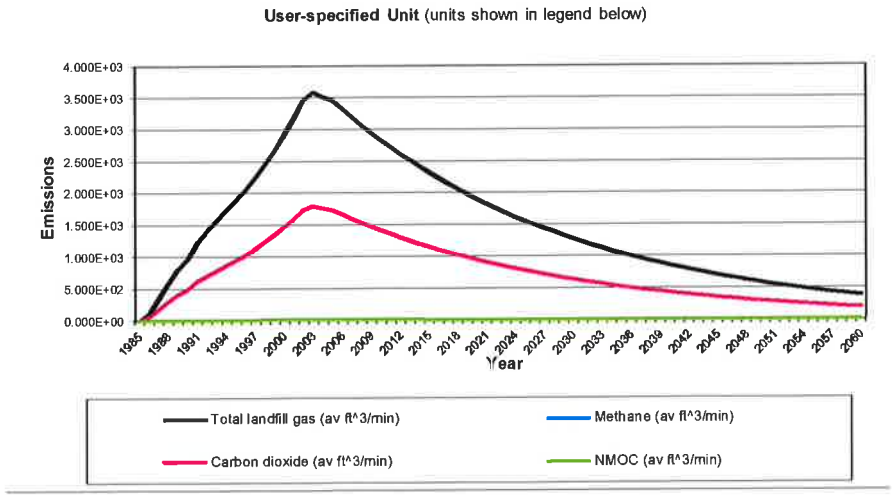
User-specified Unit (units shown in legend below)
Emissions
4.000E+03
3.500E+03
3.000E+03
2.500E+03
2.000E+03
1.500E+03
1.000E+03
5.000E+02
0.000E+00
1985 1988 1991 1994 1997 2000 2003 2006 2009 2012 2015 2018 2021 2024 2027 2030 2033 2036 2039 2042 2045 2048 2051 2054 2057 2060
Year
Total landfill gas (av ft^3/min)
Methane (av ft^3/min)
Carbon dioxide (av ft^3/min)
NMOC (av ft^3/min)

Results

Year	Total landfill gas			Methane		
	(Mg/year)	(m^3/year)	(av ft^3/min)	(Mg/year)	(m^3/year)	(av ft^3/min)
1985	0	0	0	0	0	0
1986	2.204E+03	1.765E+06	1.186E+02	5.887E+02	8.824E+05	5.929E+01
1987	6.668E+03	5.339E+06	3.587E+02	1.781E+03	2.670E+06	1.794E+02
1988	1.096E+04	8.774E+06	5.895E+02	2.927E+03	4.387E+06	2.947E+02
1989	1.508E+04	1.207E+07	8.112E+02	4.027E+03	6.037E+06	4.056E+02
1990	1.810E+04	1.450E+07	9.739E+02	4.835E+03	7.248E+06	4.870E+02
1991	2.300E+04	1.842E+07	1.237E+03	6.143E+03	9.208E+06	6.187E+02
1992	2.605E+04	2.086E+07	1.402E+03	6.958E+03	1.043E+07	7.008E+02
1993	2.911E+04	2.331E+07	1.566E+03	7.777E+03	1.166E+07	7.832E+02
1994	3.205E+04	2.566E+07	1.724E+03	8.560E+03	1.283E+07	8.621E+02
1995	3.492E+04	2.796E+07	1.879E+03	9.326E+03	1.398E+07	9.393E+02
1996	3.809E+04	3.050E+07	2.049E+03	1.017E+04	1.525E+07	1.025E+03
1997	4.167E+04	3.337E+07	2.242E+03	1.113E+04	1.669E+07	1.121E+03
1998	4.572E+04	3.661E+07	2.460E+03	1.221E+04	1.831E+07	1.230E+03
1999	4.962E+04	3.974E+07	2.670E+03	1.325E+04	1.987E+07	1.335E+03
2000	5.417E+04	4.337E+07	2.914E+03	1.447E+04	2.169E+07	1.457E+03
2001	5.886E+04	4.714E+07	3.167E+03	1.572E+04	2.357E+07	1.584E+03
2002	6.445E+04	5.161E+07	3.468E+03	1.722E+04	2.581E+07	1.734E+03
2003	6.669E+04	5.341E+07	3.588E+03	1.781E+04	2.670E+07	1.794E+03
2004	6.526E+04	5.226E+07	3.511E+03	1.743E+04	2.613E+07	1.756E+03
2005	6.443E+04	5.159E+07	3.466E+03	1.721E+04	2.579E+07	1.733E+03
2006	6.190E+04	4.957E+07	3.330E+03	1.653E+04	2.478E+07	1.665E+03
2007	5.947E+04	4.762E+07	3.200E+03	1.589E+04	2.381E+07	1.600E+03
2008	5.714E+04	4.576E+07	3.074E+03	1.526E+04	2.288E+07	1.537E+03
2009	5.490E+04	4.396E+07	2.954E+03	1.466E+04	2.198E+07	1.477E+03
2010	5.275E+04	4.224E+07	2.838E+03	1.409E+04	2.112E+07	1.419E+03
2011	5.068E+04	4.058E+07	2.727E+03	1.354E+04	2.029E+07	1.363E+03
2012	4.869E+04	3.899E+07	2.620E+03	1.301E+04	1.950E+07	1.310E+03
2013	4.678E+04	3.746E+07	2.517E+03	1.250E+04	1.873E+07	1.259E+03
2014	4.495E+04	3.599E+07	2.418E+03	1.201E+04	1.800E+07	1.209E+03
2015	4.319E+04	3.458E+07	2.324E+03	1.154E+04	1.729E+07	1.162E+03
2016	4.149E+04	3.323E+07	2.232E+03	1.108E+04	1.661E+07	1.116E+03
2017	3.987E+04	3.192E+07	2.145E+03	1.065E+04	1.596E+07	1.072E+03
2018	3.830E+04	3.067E+07	2.061E+03	1.023E+04	1.534E+07	1.030E+03
2019	3.680E+04	2.947E+07	1.980E+03	9.830E+03	1.473E+07	9.900E+02
2020	3.536E+04	2.831E+07	1.902E+03	9.445E+03	1.416E+07	9.512E+02
2021	3.397E+04	2.720E+07	1.828E+03	9.074E+03	1.360E+07	9.139E+02
2022	3.264E+04	2.614E+07	1.756E+03	8.718E+03	1.307E+07	8.780E+02
2023	3.136E+04	2.511E+07	1.687E+03	8.377E+03	1.256E+07	8.436E+02
2024	3.013E+04	2.413E+07	1.621E+03	8.048E+03	1.206E+07	8.105E+02
2025	2.895E+04	2.318E+07	1.558E+03	7.733E+03	1.159E+07	7.788E+02
2026	2.781E+04	2.227E+07	1.496E+03	7.429E+03	1.114E+07	7.482E+02
2027	2.672E+04	2.140E+07	1.438E+03	7.138E+03	1.070E+07	7.189E+02
2028	2.568E+04	2.056E+07	1.381E+03	6.858E+03	1.028E+07	6.907E+02
2029	2.467E+04	1.975E+07	1.327E+03	6.589E+03	9.877E+06	6.636E+02
2030	2.370E+04	1.898E+07	1.275E+03	6.331E+03	9.489E+06	6.376E+02
2031	2.277E+04	1.823E+07	1.225E+03	6.083E+03	9.117E+06	6.126E+02
2032	2.188E+04	1.752E+07	1.177E+03	5.844E+03	8.760E+06	5.886E+02
2033	2.102E+04	1.683E+07	1.131E+03	5.615E+03	8.416E+06	5.655E+02
2034	2.020E+04	1.617E+07	1.087E+03	5.395E+03	8.086E+06	5.433E+02

Results (Continued)

Year	Total landfill gas			Methane		
	(Mg/year)	(m^3/year)	(av ft^3/min)	(Mg/year)	(m^3/year)	(av ft^3/min)
2035	1.940E+04	1.554E+07	1.044E+03	5.183E+03	7.769E+06	5.220E+02
2036	1.864E+04	1.493E+07	1.003E+03	4.980E+03	7.465E+06	5.015E+02
2037	1.791E+04	1.434E+07	9.638E+02	4.785E+03	7.172E+06	4.819E+02
2038	1.721E+04	1.378E+07	9.260E+02	4.597E+03	6.891E+06	4.630E+02
2039	1.654E+04	1.324E+07	8.897E+02	4.417E+03	6.621E+06	4.448E+02
2040	1.589E+04	1.272E+07	8.548E+02	4.244E+03	6.361E+06	4.274E+02
2041	1.526E+04	1.222E+07	8.213E+02	4.077E+03	6.112E+06	4.106E+02
2042	1.467E+04	1.174E+07	7.891E+02	3.917E+03	5.872E+06	3.945E+02
2043	1.409E+04	1.128E+07	7.581E+02	3.764E+03	5.642E+06	3.791E+02
2044	1.354E+04	1.084E+07	7.284E+02	3.616E+03	5.420E+06	3.642E+02
2045	1.301E+04	1.042E+07	6.998E+02	3.474E+03	5.208E+06	3.499E+02
2046	1.250E+04	1.001E+07	6.724E+02	3.338E+03	5.004E+06	3.362E+02
2047	1.201E+04	9.615E+06	6.460E+02	3.207E+03	4.808E+06	3.230E+02
2048	1.154E+04	9.238E+06	6.207E+02	3.082E+03	4.619E+06	3.103E+02
2049	1.108E+04	8.876E+06	5.964E+02	2.961E+03	4.438E+06	2.982E+02
2050	1.065E+04	8.528E+06	5.730E+02	2.845E+03	4.264E+06	2.865E+02
2051	1.023E+04	8.193E+06	5.505E+02	2.733E+03	4.097E+06	2.753E+02
2052	9.831E+03	7.872E+06	5.289E+02	2.626E+03	3.936E+06	2.645E+02
2053	9.445E+03	7.563E+06	5.082E+02	2.523E+03	3.782E+06	2.541E+02
2054	9.075E+03	7.267E+06	4.883E+02	2.424E+03	3.633E+06	2.441E+02
2055	8.719E+03	6.982E+06	4.691E+02	2.329E+03	3.491E+06	2.346E+02
2056	8.377E+03	6.708E+06	4.507E+02	2.238E+03	3.354E+06	2.254E+02
2057	8.049E+03	6.445E+06	4.330E+02	2.150E+03	3.223E+06	2.165E+02
2058	7.733E+03	6.192E+06	4.161E+02	2.066E+03	3.096E+06	2.080E+02
2059	7.430E+03	5.950E+06	3.998E+02	1.985E+03	2.975E+06	1.999E+02
2060	7.139E+03	5.716E+06	3.841E+02	1.907E+03	2.858E+06	1.920E+02
2061	6.859E+03	5.492E+06	3.690E+02	1.832E+03	2.746E+06	1.845E+02
2062	6.590E+03	5.277E+06	3.545E+02	1.760E+03	2.638E+06	1.773E+02
2063	6.331E+03	5.070E+06	3.406E+02	1.691E+03	2.535E+06	1.703E+02
2064	6.083E+03	4.871E+06	3.273E+02	1.625E+03	2.436E+06	1.636E+02
2065	5.845E+03	4.680E+06	3.145E+02	1.561E+03	2.340E+06	1.572E+02
2066	5.615E+03	4.497E+06	3.021E+02	1.500E+03	2.248E+06	1.511E+02
2067	5.395E+03	4.320E+06	2.903E+02	1.441E+03	2.160E+06	1.451E+02
2068	5.184E+03	4.151E+06	2.789E+02	1.385E+03	2.075E+06	1.394E+02
2069	4.980E+03	3.988E+06	2.680E+02	1.330E+03	1.994E+06	1.340E+02
2070	4.785E+03	3.832E+06	2.575E+02	1.278E+03	1.916E+06	1.287E+02
2071	4.598E+03	3.682E+06	2.474E+02	1.228E+03	1.841E+06	1.237E+02
2072	4.417E+03	3.537E+06	2.377E+02	1.180E+03	1.769E+06	1.188E+02
2073	4.244E+03	3.398E+06	2.283E+02	1.134E+03	1.699E+06	1.142E+02
2074	4.078E+03	3.265E+06	2.194E+02	1.089E+03	1.633E+06	1.097E+02
2075	3.918E+03	3.137E+06	2.108E+02	1.046E+03	1.569E+06	1.054E+02
2076	3.764E+03	3.014E+06	2.025E+02	1.005E+03	1.507E+06	1.013E+02
2077	3.617E+03	2.896E+06	1.946E+02	9.660E+02	1.448E+06	9.729E+01
2078	3.475E+03	2.782E+06	1.870E+02	9.281E+02	1.391E+06	9.348E+01
2079	3.339E+03	2.673E+06	1.796E+02	8.918E+02	1.337E+06	8.981E+01
2080	3.208E+03	2.569E+06	1.726E+02	8.568E+02	1.284E+06	8.629E+01
2081	3.082E+03	2.468E+06	1.658E+02	8.232E+02	1.234E+06	8.291E+01
2082	2.961E+03	2.371E+06	1.593E+02	7.909E+02	1.186E+06	7.965E+01
2083	2.845E+03	2.278E+06	1.531E+02	7.599E+02	1.139E+06	7.653E+01
2084	2.733E+03	2.189E+06	1.471E+02	7.301E+02	1.094E+06	7.353E+01
2085	2.626E+03	2.103E+06	1.413E+02	7.015E+02	1.051E+06	7.065E+01

Results (Continued)

Year	Total landfill gas			Methane		
	(Mg/year)	(m^3/year)	(av ft^3/min)	(Mg/year)	(m^3/year)	(av ft^3/min)
2086	2.523E+03	2.020E+06	1.358E+02	6.740E+02	1.010E+06	6.788E+01
2087	2.424E+03	1.941E+06	1.304E+02	6.475E+02	9.706E+05	6.522E+01
2088	2.329E+03	1.865E+06	1.253E+02	6.222E+02	9.326E+05	6.266E+01
2089	2.238E+03	1.792E+06	1.204E+02	5.978E+02	8.960E+05	6.020E+01
2090	2.150E+03	1.722E+06	1.157E+02	5.743E+02	8.609E+05	5.784E+01
2091	2.066E+03	1.654E+06	1.111E+02	5.518E+02	8.271E+05	5.557E+01
2092	1.985E+03	1.589E+06	1.068E+02	5.302E+02	7.947E+05	5.339E+01
2093	1.907E+03	1.527E+06	1.026E+02	5.094E+02	7.635E+05	5.130E+01
2094	1.832E+03	1.467E+06	9.858E+01	4.894E+02	7.336E+05	4.929E+01
2095	1.760E+03	1.410E+06	9.471E+01	4.702E+02	7.048E+05	4.736E+01
2096	1.691E+03	1.354E+06	9.100E+01	4.518E+02	6.772E+05	4.550E+01
2097	1.625E+03	1.301E+06	8.743E+01	4.341E+02	6.506E+05	4.372E+01
2098	1.561E+03	1.250E+06	8.400E+01	4.170E+02	6.251E+05	4.200E+01
2099	1.500E+03	1.201E+06	8.071E+01	4.007E+02	6.006E+05	4.035E+01
2100	1.441E+03	1.154E+06	7.754E+01	3.850E+02	5.771E+05	3.877E+01
2101	1.385E+03	1.109E+06	7.450E+01	3.699E+02	5.544E+05	3.725E+01
2102	1.330E+03	1.065E+06	7.158E+01	3.554E+02	5.327E+05	3.579E+01
2103	1.278E+03	1.024E+06	6.878E+01	3.414E+02	5.118E+05	3.439E+01
2104	1.228E+03	9.835E+05	6.608E+01	3.281E+02	4.917E+05	3.304E+01
2105	1.180E+03	9.449E+05	6.349E+01	3.152E+02	4.725E+05	3.174E+01
2106	1.134E+03	9.079E+05	6.100E+01	3.028E+02	4.539E+05	3.050E+01
2107	1.089E+03	8.723E+05	5.861E+01	2.910E+02	4.361E+05	2.930E+01
2108	1.047E+03	8.381E+05	5.631E+01	2.796E+02	4.190E+05	2.815E+01
2109	1.006E+03	8.052E+05	5.410E+01	2.686E+02	4.026E+05	2.705E+01
2110	9.661E+02	7.736E+05	5.198E+01	2.581E+02	3.868E+05	2.599E+01
2111	9.282E+02	7.433E+05	4.994E+01	2.479E+02	3.716E+05	2.497E+01
2112	8.918E+02	7.141E+05	4.798E+01	2.382E+02	3.571E+05	2.399E+01
2113	8.569E+02	6.861E+05	4.610E+01	2.289E+02	3.431E+05	2.305E+01
2114	8.233E+02	6.592E+05	4.429E+01	2.199E+02	3.296E+05	2.215E+01
2115	7.910E+02	6.334E+05	4.256E+01	2.113E+02	3.167E+05	2.128E+01
2116	7.600E+02	6.086E+05	4.089E+01	2.030E+02	3.043E+05	2.044E+01
2117	7.302E+02	5.847E+05	3.929E+01	1.950E+02	2.923E+05	1.964E+01
2118	7.015E+02	5.618E+05	3.774E+01	1.874E+02	2.809E+05	1.887E+01
2119	6.740E+02	5.397E+05	3.626E+01	1.800E+02	2.699E+05	1.813E+01
2120	6.476E+02	5.186E+05	3.484E+01	1.730E+02	2.593E+05	1.742E+01
2121	6.222E+02	4.982E+05	3.348E+01	1.662E+02	2.491E+05	1.674E+01
2122	5.978E+02	4.787E+05	3.216E+01	1.597E+02	2.394E+05	1.608E+01
2123	5.744E+02	4.599E+05	3.090E+01	1.534E+02	2.300E+05	1.545E+01
2124	5.519E+02	4.419E+05	2.969E+01	1.474E+02	2.209E+05	1.485E+01
2125	5.302E+02	4.246E+05	2.853E+01	1.416E+02	2.123E+05	1.426E+01

Results (Continued)

Year	Carbon dioxide			NMOC		
	(Mg/year)	(m^3/year)	(av ft^3/min)	(Mg/year)	(m^3/year)	(av ft^3/min)
1985	0	0	0	0	0	0
1986	1.615E+03	8.824E+05	5.929E+01	2.530E+01	7.060E+03	4.743E-01
1987	4.887E+03	2.670E+06	1.794E+02	7.655E+01	2.136E+04	1.435E+00
1988	8.030E+03	4.387E+06	2.947E+02	1.258E+02	3.509E+04	2.358E+00
1989	1.105E+04	6.037E+06	4.056E+02	1.731E+02	4.829E+04	3.245E+00
1990	1.327E+04	7.248E+06	4.870E+02	2.078E+02	5.798E+04	3.896E+00
1991	1.686E+04	9.208E+06	6.187E+02	2.640E+02	7.366E+04	4.949E+00
1992	1.909E+04	1.043E+07	7.008E+02	2.991E+02	8.344E+04	5.606E+00
1993	2.134E+04	1.166E+07	7.832E+02	3.343E+02	9.325E+04	6.266E+00
1994	2.349E+04	1.283E+07	8.621E+02	3.679E+02	1.026E+05	6.897E+00
1995	2.559E+04	1.398E+07	9.393E+02	4.009E+02	1.118E+05	7.514E+00
1996	2.791E+04	1.525E+07	1.025E+03	4.373E+02	1.220E+05	8.197E+00
1997	3.054E+04	1.669E+07	1.121E+03	4.785E+02	1.335E+05	8.969E+00
1998	3.351E+04	1.831E+07	1.230E+03	5.250E+02	1.465E+05	9.840E+00
1999	3.637E+04	1.987E+07	1.335E+03	5.697E+02	1.589E+05	1.068E+01
2000	3.970E+04	2.169E+07	1.457E+03	6.219E+02	1.735E+05	1.166E+01
2001	4.314E+04	2.357E+07	1.584E+03	6.758E+02	1.885E+05	1.267E+01
2002	4.724E+04	2.581E+07	1.734E+03	7.400E+02	2.064E+05	1.387E+01
2003	4.888E+04	2.670E+07	1.794E+03	7.657E+02	2.136E+05	1.435E+01
2004	4.783E+04	2.613E+07	1.756E+03	7.493E+02	2.090E+05	1.404E+01
2005	4.722E+04	2.579E+07	1.733E+03	7.397E+02	2.064E+05	1.387E+01
2006	4.537E+04	2.478E+07	1.665E+03	7.107E+02	1.983E+05	1.332E+01
2007	4.359E+04	2.381E+07	1.600E+03	6.828E+02	1.905E+05	1.280E+01
2008	4.188E+04	2.288E+07	1.537E+03	6.560E+02	1.830E+05	1.230E+01
2009	4.024E+04	2.198E+07	1.477E+03	6.303E+02	1.758E+05	1.182E+01
2010	3.866E+04	2.112E+07	1.419E+03	6.056E+02	1.690E+05	1.135E+01
2011	3.714E+04	2.029E+07	1.363E+03	5.819E+02	1.623E+05	1.091E+01
2012	3.569E+04	1.950E+07	1.310E+03	5.590E+02	1.560E+05	1.048E+01
2013	3.429E+04	1.873E+07	1.259E+03	5.371E+02	1.498E+05	1.007E+01
2014	3.294E+04	1.800E+07	1.209E+03	5.161E+02	1.440E+05	9.673E+00
2015	3.165E+04	1.729E+07	1.162E+03	4.958E+02	1.383E+05	9.294E+00
2016	3.041E+04	1.661E+07	1.116E+03	4.764E+02	1.329E+05	8.930E+00
2017	2.922E+04	1.596E+07	1.072E+03	4.577E+02	1.277E+05	8.580E+00
2018	2.807E+04	1.534E+07	1.030E+03	4.398E+02	1.227E+05	8.243E+00
2019	2.697E+04	1.473E+07	9.900E+02	4.225E+02	1.179E+05	7.920E+00
2020	2.591E+04	1.416E+07	9.512E+02	4.059E+02	1.133E+05	7.609E+00
2021	2.490E+04	1.360E+07	9.139E+02	3.900E+02	1.088E+05	7.311E+00
2022	2.392E+04	1.307E+07	8.780E+02	3.747E+02	1.045E+05	7.024E+00
2023	2.298E+04	1.256E+07	8.436E+02	3.600E+02	1.004E+05	6.749E+00
2024	2.208E+04	1.206E+07	8.105E+02	3.459E+02	9.651E+04	6.484E+00
2025	2.122E+04	1.159E+07	7.788E+02	3.324E+02	9.272E+04	6.230E+00
2026	2.038E+04	1.114E+07	7.482E+02	3.193E+02	8.909E+04	5.986E+00
2027	1.959E+04	1.070E+07	7.189E+02	3.068E+02	8.559E+04	5.751E+00
2028	1.882E+04	1.028E+07	6.907E+02	2.948E+02	8.224E+04	5.526E+00
2029	1.808E+04	9.877E+06	6.636E+02	2.832E+02	7.901E+04	5.309E+00
2030	1.737E+04	9.489E+06	6.376E+02	2.721E+02	7.592E+04	5.101E+00
2031	1.669E+04	9.117E+06	6.126E+02	2.614E+02	7.294E+04	4.901E+00
2032	1.603E+04	8.760E+06	5.886E+02	2.512E+02	7.008E+04	4.709E+00
2033	1.541E+04	8.416E+06	5.655E+02	2.413E+02	6.733E+04	4.524E+00
2034	1.480E+04	8.086E+06	5.433E+02	2.319E+02	6.469E+04	4.347E+00

Results (Continued)

Year	Carbon dioxide			NMOC		
	(Mg/year)	(m^3/year)	(av ft^3/min)	(Mg/year)	(m^3/year)	(av ft^3/min)
2035	1.422E+04	7.769E+06	5.220E+02	2.228E+02	6.215E+04	4.176E+00
2036	1.366E+04	7.465E+06	5.015E+02	2.141E+02	5.972E+04	4.012E+00
2037	1.313E+04	7.172E+06	4.819E+02	2.057E+02	5.738E+04	3.855E+00
2038	1.261E+04	6.891E+06	4.630E+02	1.976E+02	5.513E+04	3.704E+00
2039	1.212E+04	6.621E+06	4.448E+02	1.898E+02	5.296E+04	3.559E+00
2040	1.164E+04	6.361E+06	4.274E+02	1.824E+02	5.089E+04	3.419E+00
2041	1.119E+04	6.112E+06	4.106E+02	1.753E+02	4.889E+04	3.285E+00
2042	1.075E+04	5.872E+06	3.945E+02	1.684E+02	4.698E+04	3.156E+00
2043	1.033E+04	5.642E+06	3.791E+02	1.618E+02	4.513E+04	3.032E+00
2044	9.922E+03	5.420E+06	3.642E+02	1.554E+02	4.336E+04	2.914E+00
2045	9.533E+03	5.208E+06	3.499E+02	1.493E+02	4.166E+04	2.799E+00
2046	9.159E+03	5.004E+06	3.362E+02	1.435E+02	4.003E+04	2.690E+00
2047	8.800E+03	4.808E+06	3.230E+02	1.379E+02	3.846E+04	2.584E+00
2048	8.455E+03	4.619E+06	3.103E+02	1.325E+02	3.695E+04	2.483E+00
2049	8.124E+03	4.438E+06	2.982E+02	1.273E+02	3.550E+04	2.385E+00
2050	7.805E+03	4.264E+06	2.865E+02	1.223E+02	3.411E+04	2.292E+00
2051	7.499E+03	4.097E+06	2.753E+02	1.175E+02	3.277E+04	2.202E+00
2052	7.205E+03	3.936E+06	2.645E+02	1.129E+02	3.149E+04	2.116E+00
2053	6.922E+03	3.782E+06	2.541E+02	1.084E+02	3.025E+04	2.033E+00
2054	6.651E+03	3.633E+06	2.441E+02	1.042E+02	2.907E+04	1.953E+00
2055	6.390E+03	3.491E+06	2.346E+02	1.001E+02	2.793E+04	1.876E+00
2056	6.140E+03	3.354E+06	2.254E+02	9.618E+01	2.683E+04	1.803E+00
2057	5.899E+03	3.223E+06	2.165E+02	9.241E+01	2.578E+04	1.732E+00
2058	5.668E+03	3.096E+06	2.080E+02	8.879E+01	2.477E+04	1.664E+00
2059	5.445E+03	2.975E+06	1.999E+02	8.530E+01	2.380E+04	1.599E+00
2060	5.232E+03	2.858E+06	1.920E+02	8.196E+01	2.287E+04	1.536E+00
2061	5.027E+03	2.746E+06	1.845E+02	7.875E+01	2.197E+04	1.476E+00
2062	4.830E+03	2.638E+06	1.773E+02	7.566E+01	2.111E+04	1.418E+00
2063	4.640E+03	2.535E+06	1.703E+02	7.269E+01	2.028E+04	1.363E+00
2064	4.458E+03	2.436E+06	1.636E+02	6.984E+01	1.948E+04	1.309E+00
2065	4.283E+03	2.340E+06	1.572E+02	6.710E+01	1.872E+04	1.258E+00
2066	4.116E+03	2.248E+06	1.511E+02	6.447E+01	1.799E+04	1.209E+00
2067	3.954E+03	2.160E+06	1.451E+02	6.194E+01	1.728E+04	1.161E+00
2068	3.799E+03	2.075E+06	1.394E+02	5.952E+01	1.660E+04	1.116E+00
2069	3.650E+03	1.994E+06	1.340E+02	5.718E+01	1.595E+04	1.072E+00
2070	3.507E+03	1.916E+06	1.287E+02	5.494E+01	1.533E+04	1.030E+00
2071	3.370E+03	1.841E+06	1.237E+02	5.279E+01	1.473E+04	9.894E-01
2072	3.237E+03	1.769E+06	1.188E+02	5.072E+01	1.415E+04	9.506E-01
2073	3.110E+03	1.699E+06	1.142E+02	4.873E+01	1.359E+04	9.134E-01
2074	2.988E+03	1.633E+06	1.097E+02	4.682E+01	1.306E+04	8.776E-01
2075	2.871E+03	1.569E+06	1.054E+02	4.498E+01	1.255E+04	8.431E-01
2076	2.759E+03	1.507E+06	1.013E+02	4.322E+01	1.206E+04	8.101E-01
2077	2.651E+03	1.448E+06	9.729E+01	4.152E+01	1.158E+04	7.783E-01
2078	2.547E+03	1.391E+06	9.348E+01	3.989E+01	1.113E+04	7.478E-01
2079	2.447E+03	1.337E+06	8.981E+01	3.833E+01	1.069E+04	7.185E-01
2080	2.351E+03	1.284E+06	8.629E+01	3.683E+01	1.027E+04	6.903E-01
2081	2.259E+03	1.234E+06	8.291E+01	3.538E+01	9.871E+03	6.632E-01
2082	2.170E+03	1.186E+06	7.965E+01	3.400E+01	9.484E+03	6.372E-01
2083	2.085E+03	1.139E+06	7.653E+01	3.266E+01	9.112E+03	6.123E-01
2084	2.003E+03	1.094E+06	7.353E+01	3.138E+01	8.755E+03	5.882E-01
2085	1.925E+03	1.051E+06	7.065E+01	3.015E+01	8.412E+03	5.652E-01

Results (Continued)

Year	Carbon dioxide			NMOC		
	(Mg/year)	(m^3/year)	(av ft^3/min)	(Mg/year)	(m^3/year)	(av ft^3/min)
2086	1.849E+03	1.010E+06	6.788E+01	2.897E+01	8.082E+03	5.430E-01
2087	1.777E+03	9.706E+05	6.522E+01	2.783E+01	7.765E+03	5.217E-01
2088	1.707E+03	9.326E+05	6.266E+01	2.674E+01	7.460E+03	5.013E-01
2089	1.640E+03	8.960E+05	6.020E+01	2.569E+01	7.168E+03	4.816E-01
2090	1.576E+03	8.609E+05	5.784E+01	2.469E+01	6.887E+03	4.627E-01
2091	1.514E+03	8.271E+05	5.557E+01	2.372E+01	6.617E+03	4.446E-01
2092	1.455E+03	7.947E+05	5.339E+01	2.279E+01	6.357E+03	4.272E-01
2093	1.398E+03	7.635E+05	5.130E+01	2.189E+01	6.108E+03	4.104E-01
2094	1.343E+03	7.336E+05	4.929E+01	2.104E+01	5.869E+03	3.943E-01
2095	1.290E+03	7.048E+05	4.736E+01	2.021E+01	5.639E+03	3.789E-01
2096	1.240E+03	6.772E+05	4.550E+01	1.942E+01	5.417E+03	3.640E-01
2097	1.191E+03	6.506E+05	4.372E+01	1.866E+01	5.205E+03	3.497E-01
2098	1.144E+03	6.251E+05	4.200E+01	1.793E+01	5.001E+03	3.360E-01
2099	1.099E+03	6.006E+05	4.035E+01	1.722E+01	4.805E+03	3.228E-01
2100	1.056E+03	5.771E+05	3.877E+01	1.655E+01	4.616E+03	3.102E-01
2101	1.015E+03	5.544E+05	3.725E+01	1.590E+01	4.435E+03	2.980E-01
2102	9.751E+02	5.327E+05	3.579E+01	1.528E+01	4.261E+03	2.863E-01
2103	9.368E+02	5.118E+05	3.439E+01	1.468E+01	4.094E+03	2.751E-01
2104	9.001E+02	4.917E+05	3.304E+01	1.410E+01	3.934E+03	2.643E-01
2105	8.648E+02	4.725E+05	3.174E+01	1.355E+01	3.780E+03	2.540E-01
2106	8.309E+02	4.539E+05	3.050E+01	1.302E+01	3.631E+03	2.440E-01
2107	7.983E+02	4.361E+05	2.930E+01	1.251E+01	3.489E+03	2.344E-01
2108	7.670E+02	4.190E+05	2.815E+01	1.202E+01	3.352E+03	2.252E-01
2109	7.370E+02	4.026E+05	2.705E+01	1.154E+01	3.221E+03	2.164E-01
2110	7.081E+02	3.868E+05	2.599E+01	1.109E+01	3.094E+03	2.079E-01
2111	6.803E+02	3.716E+05	2.497E+01	1.066E+01	2.973E+03	1.998E-01
2112	6.536E+02	3.571E+05	2.399E+01	1.024E+01	2.857E+03	1.919E-01
2113	6.280E+02	3.431E+05	2.305E+01	9.838E+00	2.745E+03	1.844E-01
2114	6.034E+02	3.296E+05	2.215E+01	9.452E+00	2.637E+03	1.772E-01
2115	5.797E+02	3.167E+05	2.128E+01	9.081E+00	2.534E+03	1.702E-01
2116	5.570E+02	3.043E+05	2.044E+01	8.725E+00	2.434E+03	1.636E-01
2117	5.351E+02	2.923E+05	1.964E+01	8.383E+00	2.339E+03	1.571E-01
2118	5.142E+02	2.809E+05	1.887E+01	8.054E+00	2.247E+03	1.510E-01
2119	4.940E+02	2.699E+05	1.813E+01	7.739E+00	2.159E+03	1.451E-01
2120	4.746E+02	2.593E+05	1.742E+01	7.435E+00	2.074E+03	1.394E-01
2121	4.560E+02	2.491E+05	1.674E+01	7.144E+00	1.993E+03	1.339E-01
2122	4.381E+02	2.394E+05	1.608E+01	6.864E+00	1.915E+03	1.287E-01
2123	4.210E+02	2.300E+05	1.545E+01	6.594E+00	1.840E+03	1.236E-01
2124	4.044E+02	2.209E+05	1.485E+01	6.336E+00	1.768E+03	1.188E-01
2125	3.886E+02	2.123E+05	1.426E+01	6.087E+00	1.698E+03	1.141E-01

APPENDIX C

CONSTRUCTION PLAN FOR CONTINGENT NORTH QUARRY ENHANCED GAS COLLECTION AND CONTROL SYSTEM (GCCS)

CONSTRUCTION PLANS FOR

~~CONTINGENT~~ NORTH QUARRY ENHANCED GAS COLLECTION AND CONTROL SYSTEM (GCCS)

BRIDGETON LANDFILL

BRIDGETON, MISSOURI

JULY 2013
REVISED OCTOBER 2013 1
REVISED NOVEMBER 2013 2

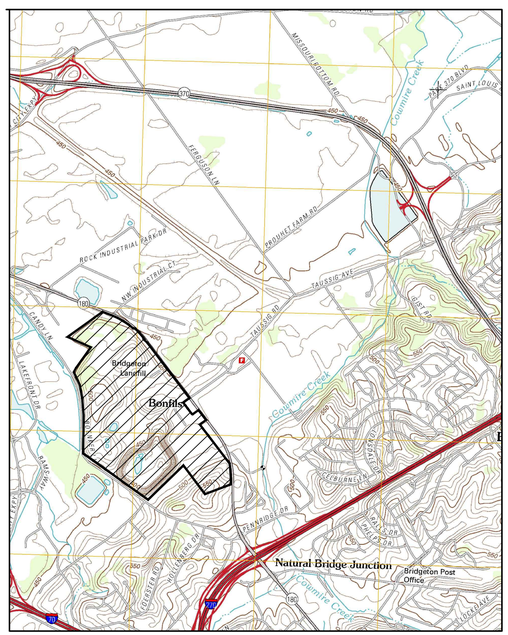

SOURCE: SAINT CHARLES, MO. 7.5 MIN. U.S.G.S. QUADRANGLE MAPS

PREPARED FOR:

BRIDGETON LANDFILL, LLC

PREPARED BY:

CORNERSTONE
Environmental Group, LLC

400 QUADRANGLE DRIVE
SUITE E
BOLINGBROOK, ILLINOIS 60440
Tel. (630) 633-5520
Fax. (630) 378-2640

INDEX OF DRAWINGS

1	EXISTING CONDITIONS 1
2A	GCCS PHASING PLAN - PHASE 1 1
2B	GCCS PHASING PLAN - PHASE 1 1
2C	GCCS PHASING PLAN - PHASE 2 1
3	DETAILS 1
4	DETAILS
5	DETAILS
6	DETAILS 1
7	DETAILS 1

CEG PROJECT # 130557

STATE OF MISSOURI
ADAM [illegible]
NUMBER
E-28055
REGISTERED PROFESSIONAL ENGINEER
11/6/13

This drawing represents intellectual property of Cornerstone Environmental Group, LLC. Any modification to the original by other than Cornerstone Environmental Group, LLC personnel violates its original purpose and as such is rendered void. Cornerstone Environmental Group, LLC will not be held liable for any changes made to this document without express written consent of the originator.

1" 1/2" 0" 1"

File: X:\PROJECTS\BRIDGETON (MO)\130557 - North Quarry GCCS Evaluation\PROJ DWGS\REVISED 10-01-13\BKBLSTS01.dwg Layout: PS Layout User: peter.larson Nov 06, 2013 - 2:53pm

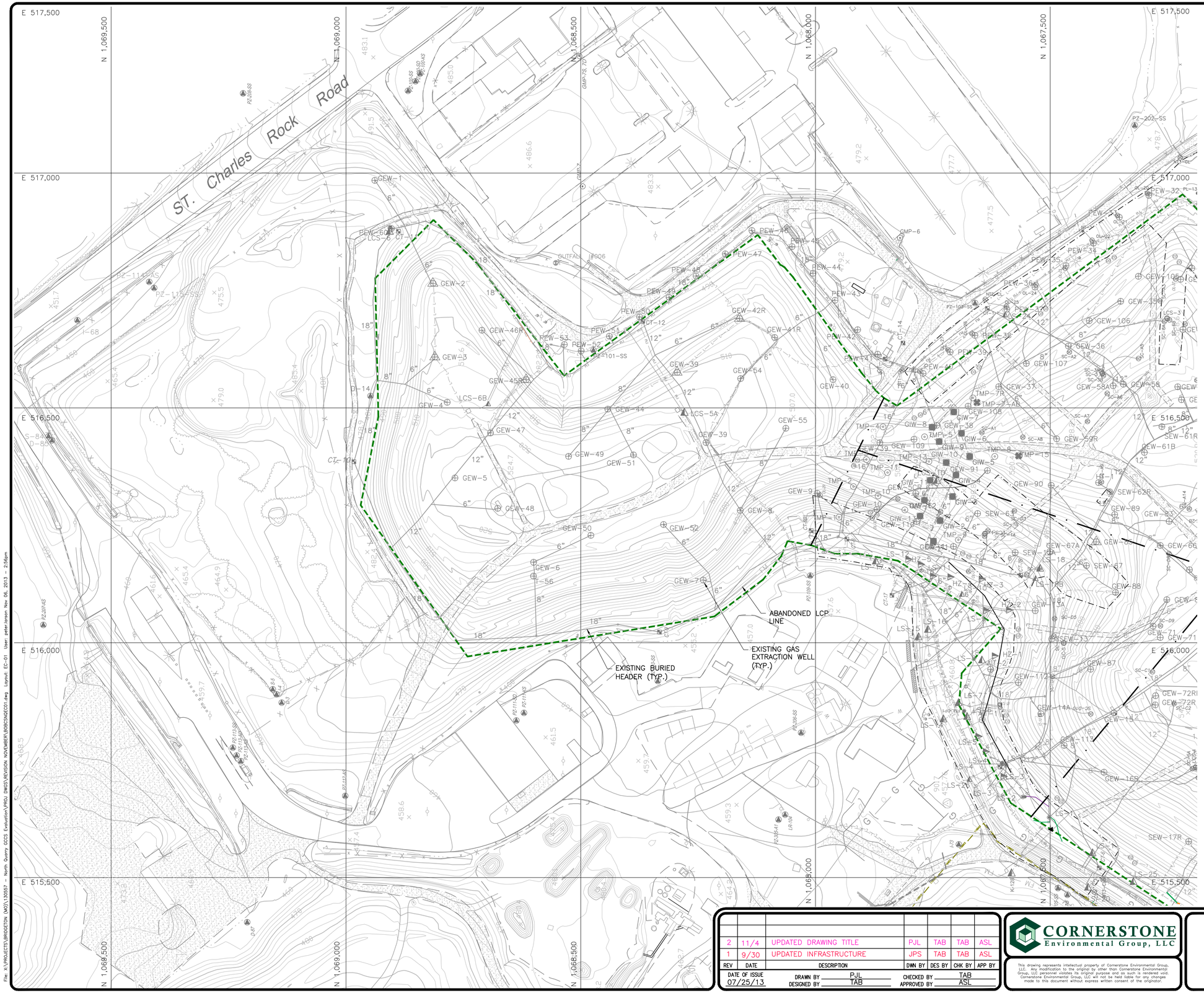
E 517,500
E 517,000
E 516,500
E 516,000
E 515,500
N 1,069,500
N 1,069,000
N 1,068,500
N 1,068,000
N 1,067,500
ST. Charles Rock Road
I-68
GMP-6
GMP-7S
GMP-7D
GMP-8
OUTFALL 006
PZ-202-SS
PZ-203-SS
PZ-204-SS
PZ-205-SS
PZ-206-SS
PZ-207-AS
PZ-101-SS
PZ-102-SS
PZ-103-SS
PZ-104-SS
PZ-105-SS
PZ-106-SS
PZ-107-SS
PZ-108-SS
PZ-109-SS
PZ-110-SS
PZ-111-SS
PZ-112-SS
PZ-113-SS
PZ-114-SS
PZ-115-SS
PZ-116-SS
PZ-117-AS
PZ-118-SS
PZ-119-SS
PZ-120-SS
PZ-121-SS
PZ-122-SS
PZ-123-SS
PZ-124-SS
PZ-125-SS
PZ-126-SS
PZ-127-SS
PZ-128-SS
PZ-129-SS
PZ-130-SS
PZ-131-SS
PZ-132-SS
PZ-133-SS
PZ-134-SS
PZ-135-SS
PZ-136-SS
PZ-137-SS
PZ-138-SS
PZ-139-SS
PZ-140-SS
PZ-141-SS
PZ-142-SS
PZ-143-SS
PZ-144-SS
PZ-145-SS
PZ-146-SS
PZ-147-SS
PZ-148-SS
PZ-149-SS
PZ-150-SS
PZ-151-SS
PZ-152-SS
PZ-153-SS
PZ-154-SS
PZ-155-SS
PZ-156-SS
PZ-157-SS
PZ-158-SS
PZ-159-SS
PZ-160-SS
PZ-161-SS
PZ-162-SS
PZ-163-SS
PZ-164-SS
PZ-165-SS
PZ-166-SS
PZ-167-SS
PZ-168-SS
PZ-169-SS
PZ-170-SS
PZ-171-SS
PZ-172-SS
PZ-173-SS
PZ-174-SS
PZ-175-SS
PZ-176-SS
PZ-177-SS
PZ-178-SS
PZ-179-SS
PZ-180-SS
PZ-181-SS
PZ-182-SS
PZ-183-SS
PZ-184-SS
PZ-185-SS
PZ-186-SS
PZ-187-SS
PZ-188-SS
PZ-189-SS
PZ-190-SS
PZ-191-SS
PZ-192-SS
PZ-193-SS
PZ-194-SS
PZ-195-SS
PZ-196-SS
PZ-197-SS
PZ-198-SS
PZ-199-SS
PZ-200-SS
PZ-201-SS
GEW-1
GEW-2
GEW-3
GEW-4
GEW-5
GEW-6
GEW-7
GEW-8
GEW-9
GEW-10
GEW-11
GEW-12
GEW-13
GEW-14
GEW-15
GEW-16R
GEW-17R
GEW-18
GEW-19
GEW-20
GEW-21
GEW-22
GEW-23
GEW-24
GEW-25
GEW-26
GEW-27
GEW-28
GEW-29
GEW-30
GEW-31
GEW-32
GEW-33
GEW-34
GEW-35
GEW-36
GEW-37
GEW-38
GEW-39
GEW-40
GEW-41R
GEW-42R
GEW-43
GEW-44
GEW-45
GEW-46R
GEW-47
GEW-48
GEW-49
GEW-50
GEW-51
GEW-52
GEW-53
GEW-54
GEW-55
GEW-56
GEW-57R
GEW-58
GEW-58A
GEW-59R
GEW-60
GEW-61R
GEW-61B
GEW-62R
GEW-63
GEW-64
GEW-65
GEW-66
GEW-67A
GEW-68
GEW-69
GEW-70
GEW-71
GEW-72R
GEW-72RI
GEW-73
GEW-74
GEW-75
GEW-76
GEW-77
GEW-78
GEW-79
GEW-80
GEW-81
GEW-82
GEW-83
GEW-84
GEW-85
GEW-86
GEW-87
GEW-88
GEW-89
GEW-90
GEW-91
GEW-92
GEW-93
GEW-94
GEW-95
GEW-96
GEW-97
GEW-98
GEW-99
GEW-100
GEW-101
GEW-102
GEW-103
GEW-104
GEW-105
GEW-106
GEW-107
GEW-108
GEW-109
GEW-110
GEW-111
GEW-112

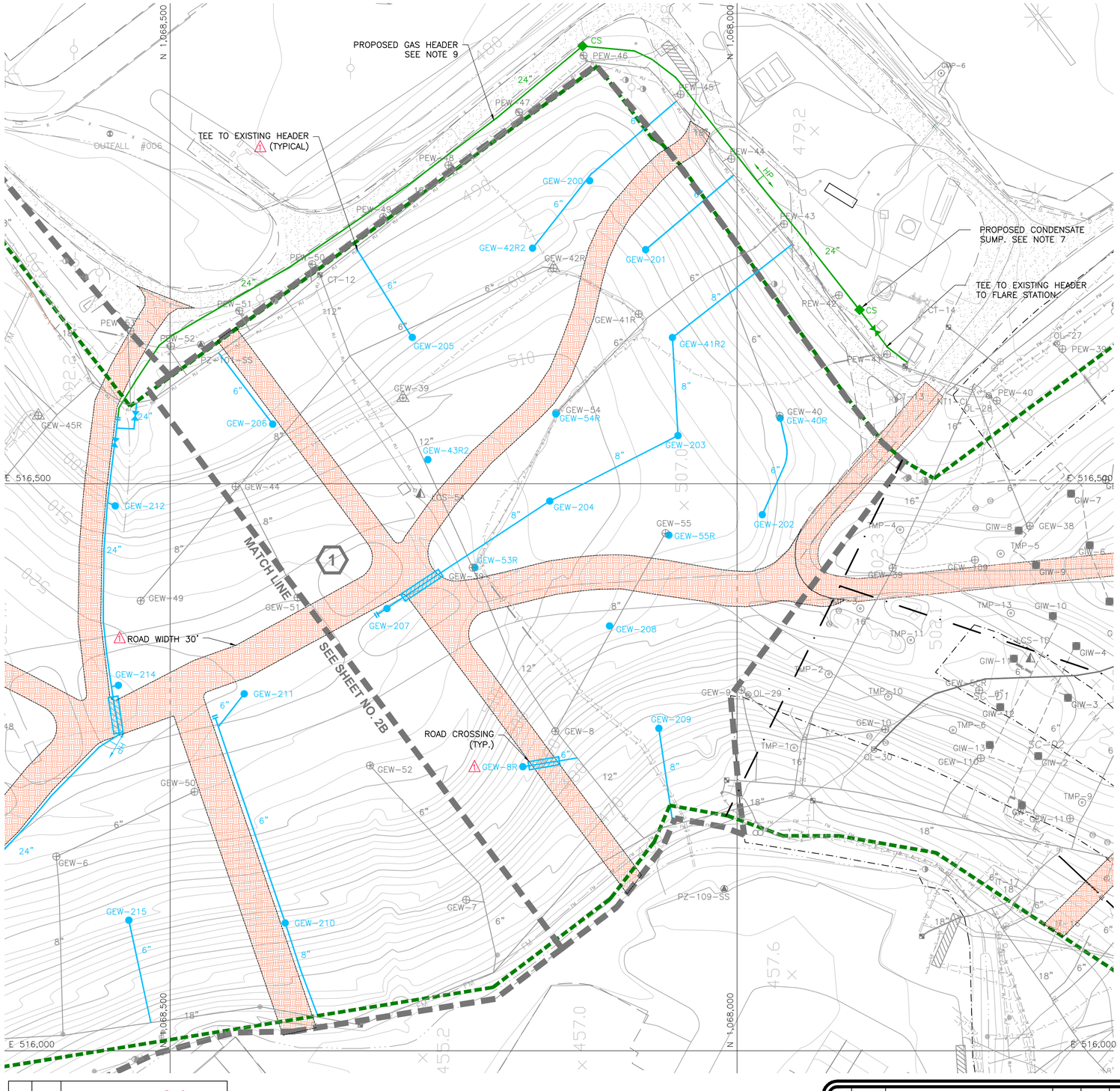

1	9/30	MODIFIED SCALE TO 1":50'	
		COMBINED PHASE 1A AND 1B	
		ADDED NOTE 9	
		ADJUSTED WELL SPACING	

0 50 100
SCALE IN FEET

LEGEND

- EXISTING SOLID WASTE BOUNDARY
- PHASE BOUNDARY
- EXISTING 10' CONTOUR
- EXISTING 2' CONTOUR
- LIGHT-DUTY ACCESS ROADS
- EXISTING LANDFILL GAS HEADER – UNDERGROUND
- EXISTING LEACHATE FORCEMAIN
- EXISTING CONDENSATE DRAIN LINE
- EXISTING AIR LINE
- EXISTING UNDERGROUND ELECTRIC
- GEW-81 EXISTING LFG EXTRACTION WELL
- GEW-2 EXISTING LFG EXTRACTION WELL – COMBO
- PEW-4 EXISTING LFG PERIMETER EXTRACTION WELL
- CT-1 EXISTING CONDENSATE PUMP STATION
- TMP-1 EXISTING TEMPERATURE MONITORING PROBE
- GMP-11 EXISTING GAS MONITORING PROBE
- IT-3 EXISTING INTERCEPTION TRENCH WELL
- LCS-5A EXISTING LEACHATE COLLECTION SUMP
- PROPOSED NORTH QUARRY LANDFILL GAS HEADER
- GEW-72 PROPOSED NORTH QUARRY LFG EXTRACTION WELL
- PROPOSED ISOLATION VALVE
- (1) PROPOSED CAP PHASE DESIGNATION

NOTES:

1. THE 2013 TOPOGRAPHIC MAP WAS PROVIDED BY COOP AERIAL SURVEYORS, CO., PHOENIX, AZ. DATE OF PHOTO: 02/13/2013.
2. UTILITIES SHOWN TAKEN FROM DRAWING 1 OF 1 "SITE INFRASTRUCTURE" BY AQUATERRA ENVIRONMENTAL SOLUTIONS, INC. DATED 09/16/2013.
3. PROPOSED HEADER/LATERAL TO BE INSTALLED ABOVE CAP.
4. INSTALL NEW 3" HDPE SDR 11 / 6" HDPE SDR 17 FORCEMAIN AND 2" HDPE SDR 9 AIR MAIN WITH ALL HEADER/LATERAL CONSTRUCTION. CONNECT TO PERIMETER AIR AND FORCEMAIN AT INTERSECTIONS.
5. MINIMUM 3% SLOPE FOR LFG PIPING WITHIN LIMITS OF WASTE PLACEMENT. MINIMUM 1% SLOPE FOR LFG PIPING OUTSIDE LIMITS OF WASTE PLACEMENT.
6. PROPOSED CAP PHASES REFERENCED FROM "CONSTRUCTION PLANS FOR THE NORTH QUARRY – EVOH GEOMEMBRANE CAP AND CAP INTEGRITY SYSTEM AT BRIDGETON LANDFILL", JULY 2013, BY CORNERSTONE ENVIRONMENTAL GROUP, LLC.
7. CONDENSATE SUMP SHOWN FOR REFERENCE. NEED TO BE DETERMINED AT THE TIME OF CONSTRUCTION BASED UPON FIELD CONDITIONS.
8. TEE TO EXISTING HEADER. INCLUDE 18" ISOLATION VALVE BETWEEN HEADERS. WHERE CONNECTED TO BELOW CAP HEADERS, INSTALL BOOT AT CAP PENETRATION POINT.

(1) 9. SUPPLEMENTAL HEADER TO FLARE STATION. CONSTRUCT IF NORTH QUARRY EXPERIENCES SSE AND REQUIRES ADDITIONAL GCCS CAPACITY.

STATE OF MISSOURI
ADAM L. NIEMEN
NUMBER
E-22035
REGISTERED PROFESSIONAL ENGINEER
11/6/13

REV	DATE	DESCRIPTION	DWN BY	DES BY	CHK BY	APP BY
2	11/4	UPDATED DRAWING TITLE	PJL	TAB	TAB	ASL
		RESPONSE TO 9-17-13 MDNR COMMENTS				

DATE OF ISSUE 07/25/13
DRAWN BY PJL
DESIGNED BY TAB
CHECKED BY TAB
APPROVED BY ASL

CORNERSTONE Environmental Group, LLC

This drawing represents intellectual property of Cornerstone Environmental Group, LLC. Any modification to the original by other than Cornerstone Environmental Group, LLC personnel violates its original purpose and as such is rendered void. Cornerstone Environmental Group, LLC will not be held liable for any changes made to this document without express written consent of the originator.

BRIDGETON LANDFILL, LLC.
BRIDGETON LANDFILL
BRIDGETON, MISSOURI
CONSTRUCTION PLAN FOR
~~CONTINGENT~~ **NORTH QUARRY ENHANCED GCCS**
PHASE 1

SHEET NO. **2A**
PROJECT NO. 130557

1" 1/2" 0"

File: X:\PROJECTS\BRIDGETON (MO)\130557 - North Quarry GCCS Evaluation\PROJ DWGS\REVISION NOVEMBER\BRIDSNQPH2A-B.dwg Layout: PH1 - 2A User: peter.larson Nov 06, 2013 - 2:40pm

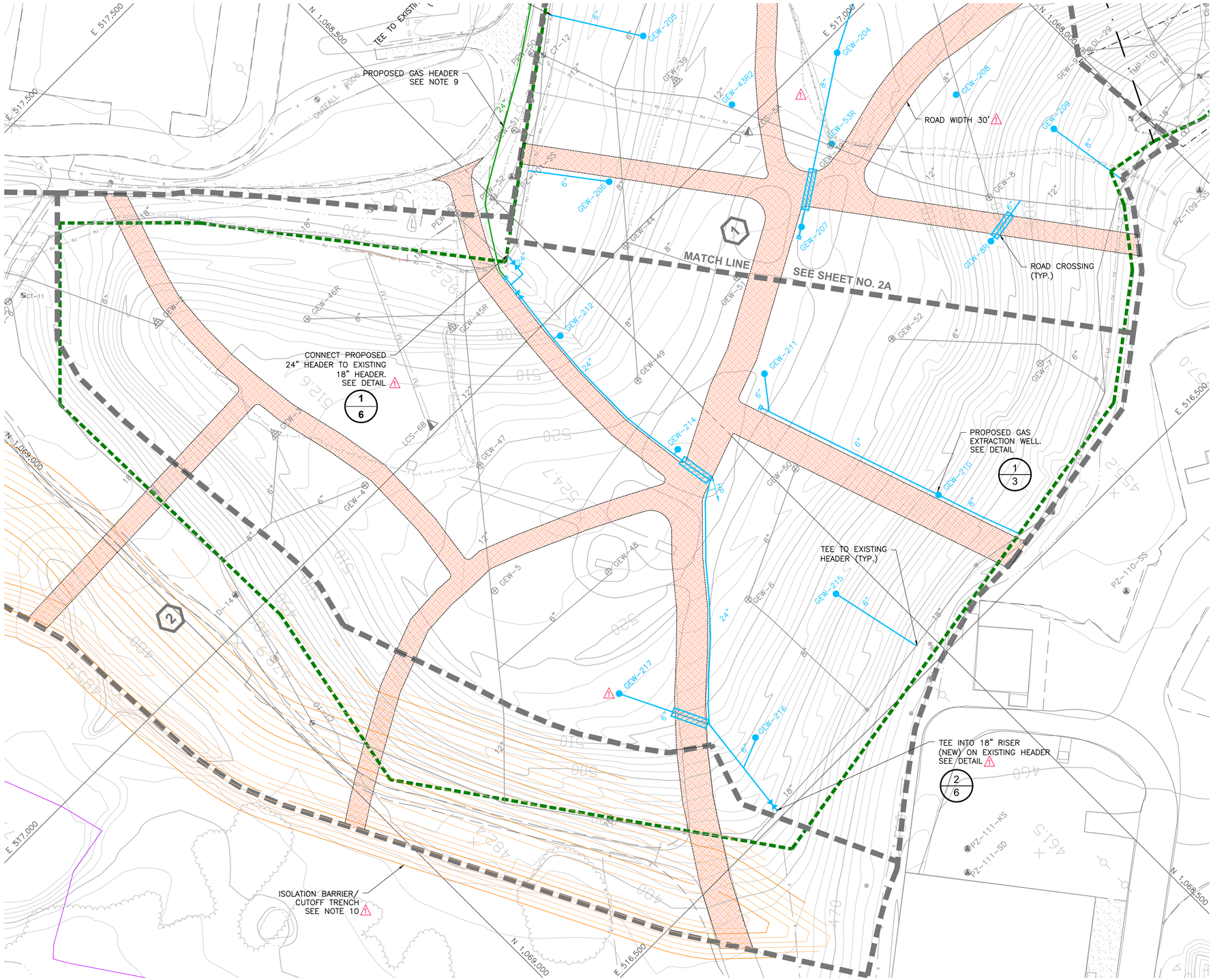

0 50 100

SCALE IN FEET

LEGEND

- EXISTING SOLID WASTE BOUNDARY
- PHASE BOUNDARY
- EXISTING 10' CONTOUR
- EXISTING 2' CONTOUR
- LIGHT-DUTY ACCESS ROADS
- EXISTING LANDFILL GAS HEADER – UNDERGROUND
- EXISTING LEACHATE FORCEMAIN
- EXISTING CONDENSATE DRAIN LINE
- EXISTING AIR LINE
- EXISTING UNDERGROUND ELECTRIC
- GEW-81 EXISTING LFG EXTRACTION WELL
- GEW-2 EXISTING LFG EXTRACTION WELL – COMBO
- PEW-4 EXISTING LFG PERIMETER EXTRACTION WELL
- CT-1 EXISTING CONDENSATE PUMP STATION
- TMP-1 EXISTING TEMPERATURE MONITORING PROBE
- GMP-11 EXISTING GAS MONITORING PROBE
- IT-3 EXISTING INTERCEPTION TRENCH WELL
- LCS-5A EXISTING LEACHATE COLLECTION SUMP
- PROPOSED NORTH QUARRY LANDFILL GAS HEADER
- GEW-72 PROPOSED NORTH QUARRY LFG EXTRACTION WELL
- PROPOSED ISOLATION VALVE
- PROPOSED CAP PHASE DESIGNATION

NOTES:

1. THE 2013 TOPOGRAPHIC MAP WAS PROVIDED BY COOP AERIAL SURVEYORS, CO., PHOENIX, AZ. DATE OF PHOTO: 02/13/2013.
2. UTILITIES SHOWN TAKEN FROM DRAWING 1 OF 1 "SITE INFRASTRUCTURE" BY AQUATERRA ENVIRONMENTAL SOLUTIONS, INC. DATED 09/16/2013.
3. PROPOSED HEADER/LATERAL TO BE INSTALLED ABOVE CAP.
4. INSTALL NEW 3" HDPE SDR 11 / 6" HDPE SDR 17 FORCEMAIN AND 2" HDPE SDR 9 AIR MAIN WITH ALL HEADER/LATERAL CONSTRUCTION. CONNECT TO PERIMETER AIR AND FORCEMAIN AT INTERSECTIONS.
5. MINIMUM 3% SLOPE FOR LFG PIPING WITHIN LIMITS OF WASTE PLACEMENT. MINIMUM 1% SLOPE FOR LFG PIPING OUTSIDE LIMITS OF WASTE PLACEMENT.
6. PROPOSED CAP PHASES REFERENCED FROM "CONSTRUCTION PLANS FOR THE NORTH QUARRY – EVOH GEOMEMBRANE CAP AND CAP INTEGRITY SYSTEM AT BRIDGETON LANDFILL", JULY 2013, BY CORNERSTONE ENVIRONMENTAL GROUP, LLC.
7. CONDENSATE SUMP SHOWN FOR REFERENCE. NEED TO BE DETERMINED AT THE TIME OF CONSTRUCTION BASED UPON FIELD CONDITIONS.
8. TEE TO EXISTING HEADER. INCLUDE 18" ISOLATION VALVE BETWEEN HEADERS. WHERE CONNECTED TO BELOW CAP HEADERS, INSTALL BOOT AT CAP PENETRATION POINT.
9. SUPPLEMENTAL HEADER TO FLARE STATION. CONSTRUCT IF NORTH QUARRY EXPERIENCES SSE AND REQUIRES ADDITIONAL GCCS CAPACITY.
10. REFERENCE CONSTRUCTION PLANS FOR "NORTH QUARRY – EVOH GEOMEMBRANE CAP AND CAP INTEGRITY SYSTEM". PREPARED BY CORNERSTONE JULY 2013.

STATE OF MISSOURI
ADAM T. KEITH
NOTARY PUBLIC
E-20055
11/6/13

1	9/30	MODIFIED SCALE TO 1":50'
		COMBINED PHASE 1A AND 1B
		ADDED NOTE 9 AND 10
		ADJUSTED WELL SPACING

REV	DATE	DESCRIPTION	DWN BY	DES BY	CHK BY	APP BY
2	11/4	UPDATED DRAWING TITLE	PJL	TAB	TAB	ASL
		RESPONSE TO 9-17-13 MDNR COMMENTS				

DATE OF ISSUE 07/25/13
DRAWN BY PJL
DESIGNED BY TAB
CHECKED BY TAB
APPROVED BY ASL

CORNERSTONE Environmental Group, LLC

This drawing represents intellectual property of Cornerstone Environmental Group, LLC. Any modification to the original by other than Cornerstone Environmental Group, LLC personnel violates its original purpose and as such is rendered void. Cornerstone Environmental Group, LLC will not be held liable for any changes made to this document without express written consent of the originator.

BRIDGETON LANDFILL, LLC.
BRIDGETON LANDFILL
BRIDGETON, MISSOURI
CONSTRUCTION PLAN FOR
~~CONTINGENT~~ **NORTH QUARRY ENHANCED GCCS**
PHASE 1

SHEET NO. **2B**

PROJECT NO. 130557

1" 1/2" 0" 1"

File: X:\PROJECTS\BRIDGETON (MO)\130557 - North Quarry GCCS Evaluation\PROJ DWGS\REVISION NOVEMBER\BGBCSNQGP02A-B.dwg Layout: PH1 - 2B User: petertanson Nov 06, 2013 - 2:38pm

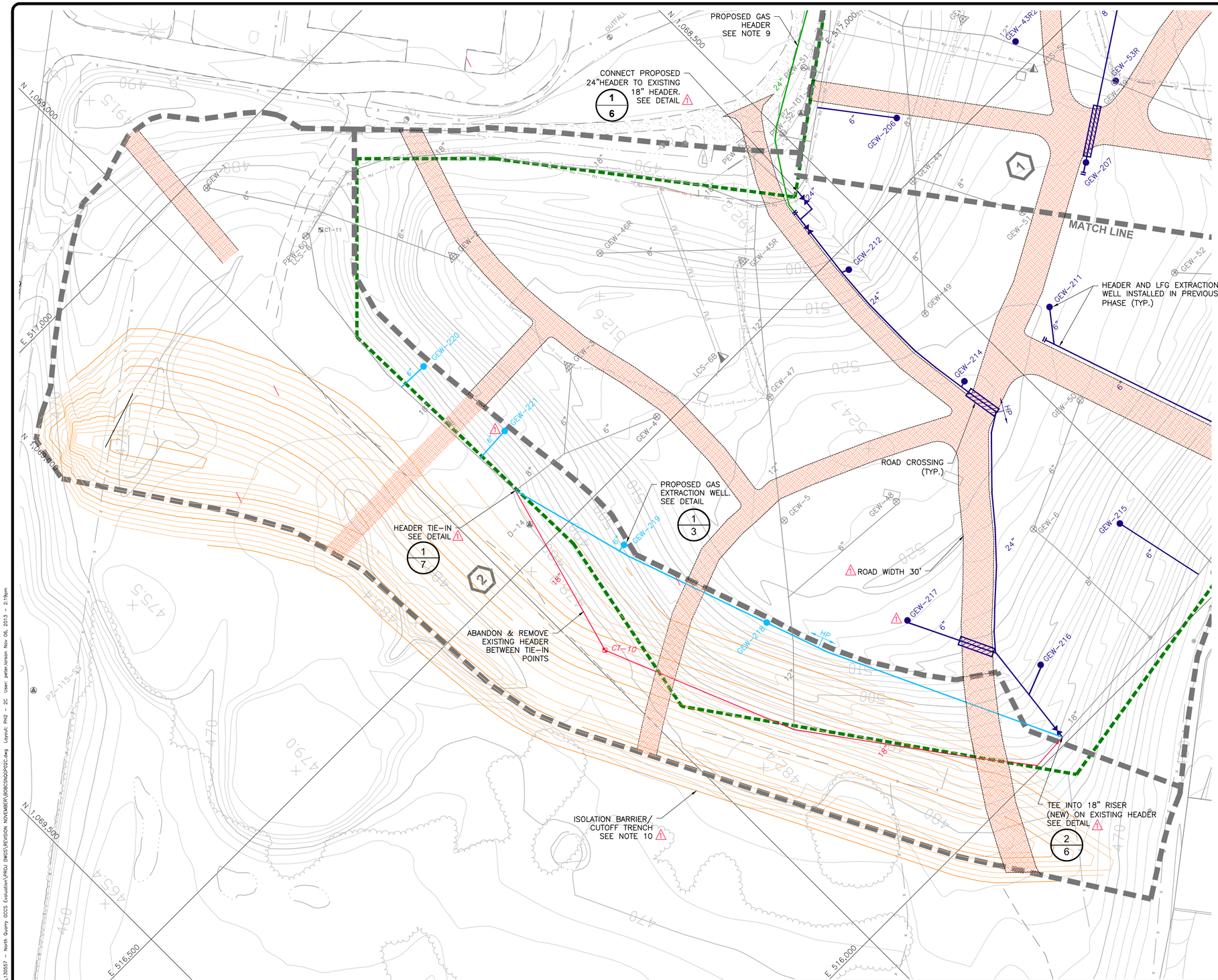

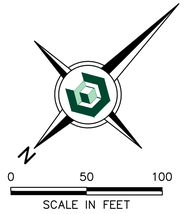

LEGEND

- EXISTING SOLID WASTE BOUNDARY
- PHASE BOUNDARY
- EXISTING 10' CONTOUR
- EXISTING 2' CONTOUR
- LIGHT-DUTY ACCESS ROADS
- EXISTING LANDFILL GAS HEADER – UNDERGROUND
- EXISTING LEACHATE FORCEMAIN
- EXISTING CONDENSATE DRAIN LINE
- EXISTING AIR LINE
- EXISTING UNDERGROUND ELECTRIC
- GEW-81 EXISTING LFG EXTRACTION WELL
- GEW-2 EXISTING LFG EXTRACTION WELL – COMBO
- PEW-4 EXISTING LFG PERIMETER EXTRACTION WELL
- CT-1 EXISTING CONDENSATE PUMP STATION
- TMP-1 EXISTING TEMPERATURE MONITORING PROBE
- GMP-11 EXISTING GAS MONITORING PROBE
- IT-3 EXISTING INTERCEPTION TRENCH WELL
- LCS-5A EXISTING LEACHATE COLLECTION SUMP
- PROPOSED NORTH QUARRY LANDFILL GAS HEADER
- GEW-72 PROPOSED NORTH QUARRY LFG EXTRACTION WELL
- PROPOSED ISOLATION VALVE
- PROPOSED CAP PHASE DESIGNATION
- HEADER TO BE ABANDONED

NOTES:

1. THE 2013 TOPOGRAPHIC MAP WAS PROVIDED BY COOP AERIAL SURVEYORS, CO., PHOENIX, AZ. DATE OF PHOTO: 02/13/2013.
2. UTILITIES SHOWN TAKEN FROM DRAWING 1 OF 1 "SITE INFRASTRUCTURE" BY AQUATERRA ENVIRONMENTAL SOLUTIONS, INC. DATED 09/16/2013.
3. PROPOSED HEADER/LATERAL TO BE INSTALLED ABOVE CAP.
4. INSTALL NEW 3" HDPE SDR 11 / 6" HDPE SDR 17 FORCEMAIN AND 2" HDPE SDR 9 AIR MAIN WITH ALL HEADER/LATERAL CONSTRUCTION. CONNECT TO PERIMETER AIR AND FORCEMAIN AT INTERSECTIONS.
5. MINIMUM 3% SLOPE FOR LFG PIPING WITHIN LIMITS OF WASTE PLACEMENT. MINIMUM 1% SLOPE FOR LFG PIPING OUTSIDE LIMITS OF WASTE PLACEMENT.
6. PROPOSED CAP PHASES REFERENCED FROM "CONSTRUCTION PLANS FOR THE NORTH QUARRY – EVOH GEOMEMBRANE CAP AND CAP INTEGRITY SYSTEM AT BRIDGETON LANDFILL", JULY 2013, BY CORNERSTONE ENVIRONMENTAL GROUP, LLC.
7. CONDENSATE SUMP SHOWN FOR REFERENCE. NEED TO BE DETERMINED AT THE TIME OF CONSTRUCTION BASED UPON FIELD CONDITIONS.
8. TEE TO EXISTING HEADER. INCLUDE 18" ISOLATION VALVE BETWEEN HEADERS. WHERE CONNECTED TO BELOW CAP HEADERS, INSTALL BOOT AT CAP PENETRATION POINT.
9. SUPPLEMENTAL HEADER TO FLARE STATION. CONSTRUCT IF NORTH QUARRY EXPERIENCES SSE AND REQUIRES ADDITIONAL GCCS CAPACITY.
10. REFERENCE CONSTRUCTION PLANS FOR "NORTH QUARRY – EVOH GEOMEMBRANE CAP AND CAP INTEGRITY SYSTEM". PREPARED BY CORNERSTONE JULY 2013

1	9/30	MODIFIED SCALE TO 1":50'
		COMBINED PHASE 1A AND 1B
		ADDED NOTE 9 AND 10
		ADJUSTED WELL SPACING

STATE OF MISSOURI
ADAM S. LEWIS
NOTARY PUBLIC
NUMBER E-23035
NOTARIAL SEAL
11/6/13

REV	DATE	DESCRIPTION	DWN BY	DES BY	CHK BY	APP BY
2	11/4	UPDATED DRAWING TITLE	PJL	TAB	TAB	ASL
		RESPONSE TO 9-17-13 MDNR COMMENTS				

DATE OF ISSUE 07/25/13
DRAWN BY PJL
DESIGNED BY TAB
CHECKED BY TAB
APPROVED BY ASL

CORNERSTONE Environmental Group, LLC

This drawing represents intellectual property of Cornerstone Environmental Group, LLC. Any modification to the original by other than Cornerstone Environmental Group, LLC personnel violates its original purpose and as such is rendered void. Cornerstone Environmental Group, LLC will not be held liable for any changes made to this document without express written consent of the originator.

BRIDGETON LANDFILL, LLC.
BRIDGETON LANDFILL
BRIDGETON, MISSOURI
CONSTRUCTION PLAN FOR
~~CONTINGENT~~ **NORTH QUARRY ENHANCED GCCS**
PHASE 2

SHEET NO. **2C**
PROJECT NO. 130557

1" 1/2" 0" 1"
File: X:\PROJECTS\BRIDGETON (MO)\130557 - North Quarry GCCS Evaluation\PROJ DWGS\REVISION NOVEMBER\BDBCSNQGP02C.dwg Layout: PH2 - 2C User: peterjanson Nov 06, 2013 - 2:19pm

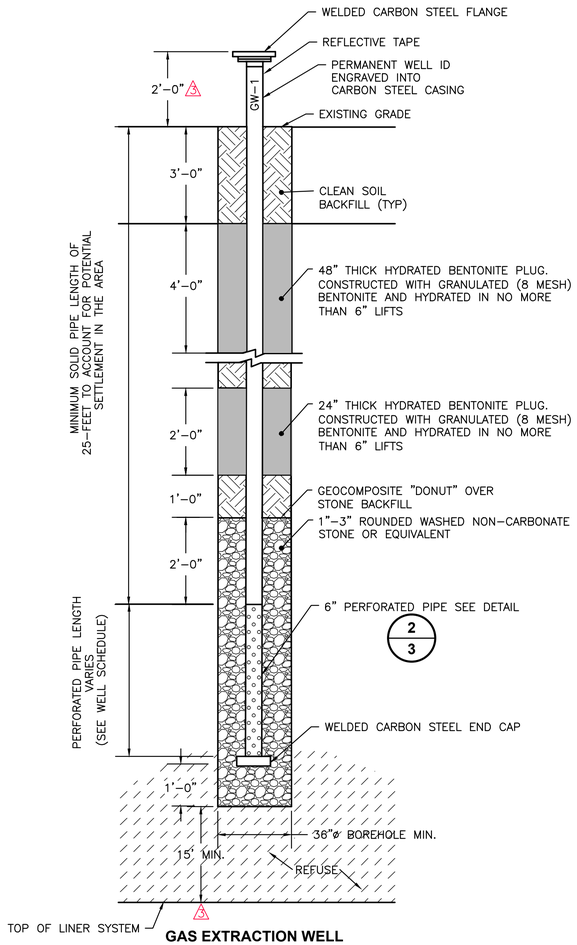

GAS EXTRACTION WELL

DETAIL 1/3
SCALE: NOT TO SCALE

NOTES:

1. CARBON STEEL WELL SECTIONS CAN BE CONNECTED USING OUTSIDE THREADED COUPLERS, OR WELDED STEEL FLANGES.

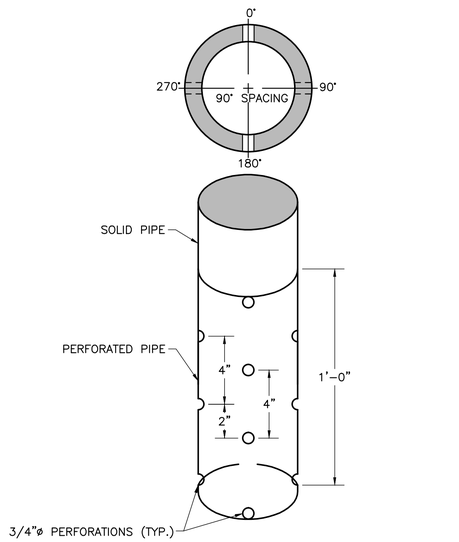

PERFORATED PIPE

DETAIL 2/3
SCALE: NOT TO SCALE

NOTES:

1. CARBON STEEL WELL CASING WITH 3/4" PERFORATIONS SPACED 90° PART HORIZONTALLY AND 4" APART VERTICALLY. 90 AND 270 DEGREE ROWS STAGGERED 2" BELOW 0 AND 180 DEGREE ROWS.

2.CONTRACTOR MAY USE PLASMA TORCH OR OTHER DEVICE TO PRODUCE APPROXIMATELY 3/4" PERFORATIONS

NOTES:

1. CONTRACTOR SHALL SURVEY THE PROPOSED WELL LOCATIONS AND PROVIDE THE EXISTING GROUND SURFACE ELEVATION AT EACH LOCATION TO THE ENGINEER PRIOR TO THE COMMENCEMENT OF WELL DRILLING.

2. ENGINEER SHALL ADJUST WELL SCHEDULE AS NECESSARY BASED ON THE PRE-CONSTRUCTION SURVEY.

3. ALL SIGNATURES REQUIRED ON THE FINAL WELL SCHEDULE PRIOR TO THE COMMENCEMENT OF DRILLING.

4. WELL BORE SEAL: NOMINAL 10'X10' FML WITH BOOT CLAMPED TO WELL CASING. HELD IN PLACE BY SOIL BACKFILL.

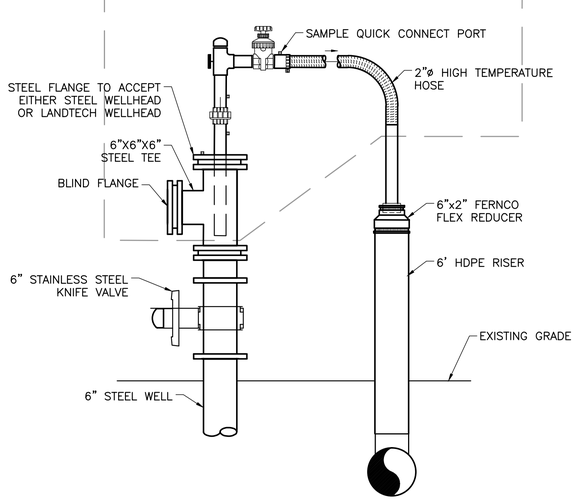

WELLHEAD DETAIL

DETAIL 3/3
SCALE: NOT TO SCALE

Bridgeton Landfill
Construction Plan for Contingent North Quarry GCCS
Proposed Well Schedule

Well ID	Northing	Easting	Bottom of Waste	Ground Surface	Depth of Refuse (D_R)[1]	Well Depth[4] (D_B)	Solid Length Below Ground(D_S)	Perf. Length (D_P)
			ft. msl	ft. msl	ft.	ft.	ft.	ft.
GEW-200	1,068,130	516,767	400	496	96	81	20	60
GEW-201	1,068,081	516,706	435	500	65	50	20	29
GEW-202	1,067,978	516,473	250	503	253	140	20	119
GEW-203	1,068,052	516,542	250	506	256	140	20	119
GEW-204	1,068,165	516,485	250	511	261	140	20	119
GEW-205	1,068,286	516,629	250	498	248	140	20	119
GEW-206	1,068,410	516,553	260	496	236	140	20	119
GEW-207	1,068,309	516,390	400	518	118	103	20	82
GEW-208	1,068,115	516,376	250	505	255	140	20	119
GEW-209	1,068,069	516,284	290	479	189	140	20	119
GEW-210	1,068,399	516,113	440	485	45	30	15	14
GEW-211	1,068,435	516,315	430	519	89	74	20	53
GEW-212	1,068,548	516,480	335	503	168	140	20	119
GEW-214	1,068,546	516,322	440	522	82	67	20	46
GEW-215	1,068,536	516,115	450	496	46	31	15	15
GEW-216	1,068,690	516,072	460	498	38	23	15	7
GEW-217	1,068,752	516,196	460	516	56	41	20	20
GEW-218	1,068,851	516,292	462	515	53	38	15	22
GEW-219	1,068,896	516,445	450	501	51	36	15	20
GEW-220	1,068,900	516,608	400	490	90	75	20	54
GEW-221	1,068,912	516,709	320	482	162	140	20	119
GEW-4R	1,068,933	516,985	380	477	97	82	20	61
GEW-8R	1,068,158	516,280	392	490	98	83	20	62
GEW-40R	1,067,962	516,558	380	498	118	103	20	82
GEW-41R2	1,068,057	516,629	250	502	252	140	20	119
GEW-42R2	1,068,162	516,688	250	503	253	140	20	119
GEW-43R2	1,068,274	516,523	250	512	262	140	20	119
GEW-53R	1,068,231	516,426	250	513	263	140	20	119
GEW-54R	1,068,160	516,562	250	509	259	140	20	119
GEW-55R	1,068,060	516,455	250	506	256	140	20	119
					TOTALS:	**3016**	**575**	**2411**

Notes:
FT. - Feet
FT. MSL - Feet above Mean Sea Level
FT. BGS - Feet below ground surface

Signatures:

Design Firm QA/QC Reviewer: _____ Firm: Cornerstone Environmental Group Date: _____

Design Firm Project Manager: _____ Firm: Cornerstone Environmental Group Date: _____

Environmental Manager: _____ Firm: Bridgeton Landfill Date: _____

CQA Inspector: _____ Firm: _____ Date: _____

Surveyor: _____ Firm: _____ Date: _____

Driller: _____ Firm: _____ Date: _____

Under no circumstances shall drilling activities begin without providing the above signatures.
Any changes to well locations or depths shall require these signatures to be obtained again.

STATE OF MISSOURI
ADAM S. LUSH
NUMBER
E-23095
REGISTERED PROFESSIONAL ENGINEER
11/6/13

REV	DATE	DESCRIPTION	DWN BY	DES BY	CHK BY	APP BY
4	11/4	UPDATED DRAWING TITLE	PJL	TAB	TAB	ASL
3	10/28	MOD. WELL SCHED. PER SURVEY, DRILL DEPTH	PJL	TAB	JAW	ASL
2	10/18	ADDED GEW-1R TO SCHEDULE	PJL	TAB	JAW	ASL
		REVISED PER 9-17-13 MDNR COMMENTS				

DATE OF ISSUE 07/25/13
DRAWN BY PJL
DESIGNED BY TAB
CHECKED BY TAB
APPROVED BY ASL

CORNERSTONE Environmental Group, LLC

This drawing represents intellectual property of Cornerstone Environmental Group, LLC. Any modification to the original by other than Cornerstone Environmental Group, LLC personnel violates its original purpose and as such is rendered void. Cornerstone Environmental Group, LLC will not be held liable for any changes made to this document without express written consent of the originator.

BRIDGETON LANDFILL, LLC.
BRIDGETON LANDFILL
BRIDGETON, MISSOURI
CONSTRUCTION PLAN FOR
CONTINGENT NORTH QUARRY ENHANCED GCCS
DETAILS

SHEET NO. 3
PROJECT NO. 130557

File: X:\PROJECTS\BRIDGETON (MO)\130557 - North Quarry GCCS Evaluation\PROJ DWGS\REVISION NOVEMBER\BGR02503 edit.dwg Layout: DETAILS-1 User: peter.larson Nov 06, 2013 - 2:20pm

1" 1/2" 0" 1"

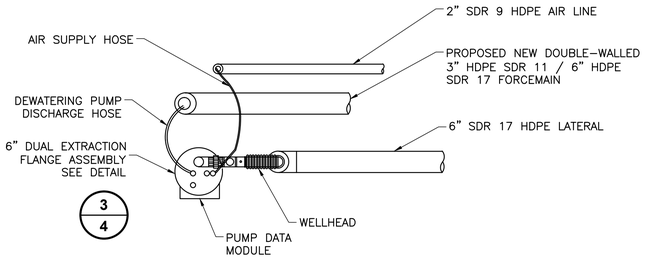

TOP VIEW

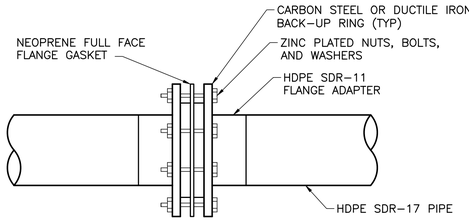

FLANGE CONNECTION

DETAIL SCALE: NOT TO SCALE 2/4

NOTE:

INSTALL 2'x2' FML RUB SHEET OR HDPE FLAT STOCK UNDER FLANGE TO CUSHION FML COVER.

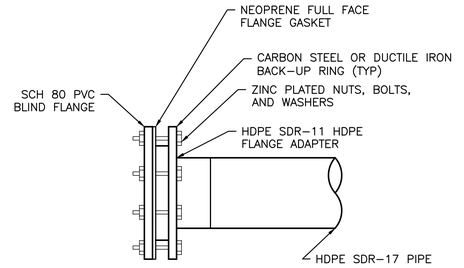

BLIND FLANGE

DETAIL SCALE: NOT TO SCALE 4/4

NOTE:

INSTALL 2'x2' FML RUB SHEET OR HDPE FLAT STOCK UNDER FLANGE TO CUSHION FML COVER.

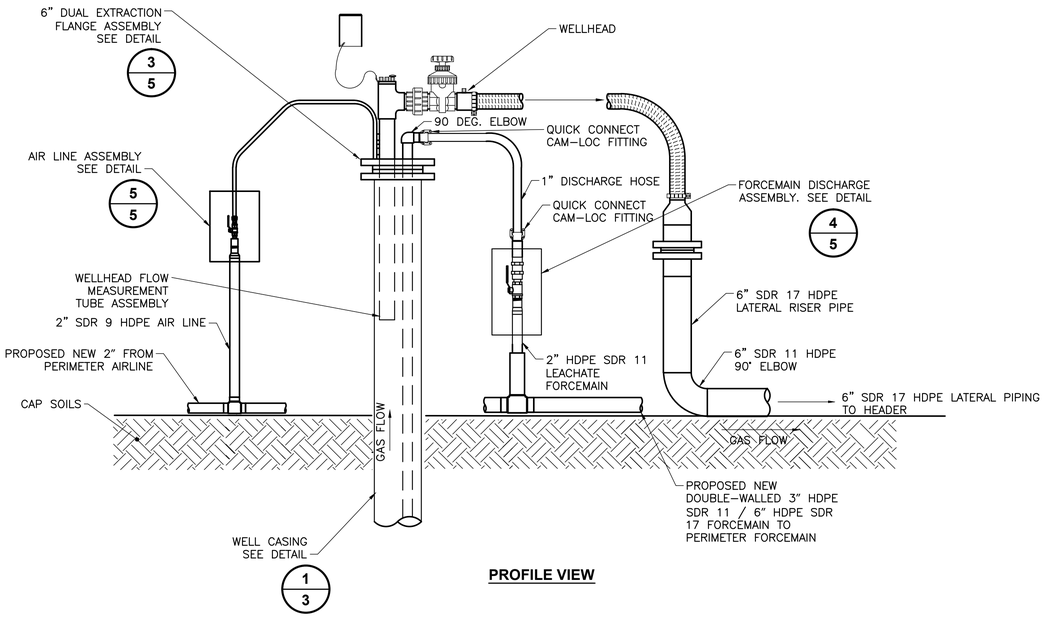

PROFILE VIEW

DUAL-EXTRACTION WELLHEAD

DETAIL SCALE: NOT TO SCALE 1/4

NOTES:

1. TO BE INSTALLED AS LIQUID LEVELS INDICATE NEED.
2. CONTRACTOR TO UTILIZE OWNER-APPROVED WELLHEAD ASSEMBLY. CONTRACTOR TO OBTAIN OWNER PREFERENCE FOR WELLHEAD ASSEMBLY.
3. PROVIDE HIGH VISIBILITY TAPE OR PAINT AROUND TOP 1-FOOT OF WELL CASING AND LATERAL PIPE.
4. AIR AND FORCEMAIN RISERS TO BE INSTALLED TO WITHIN 2' FROM SUMP.

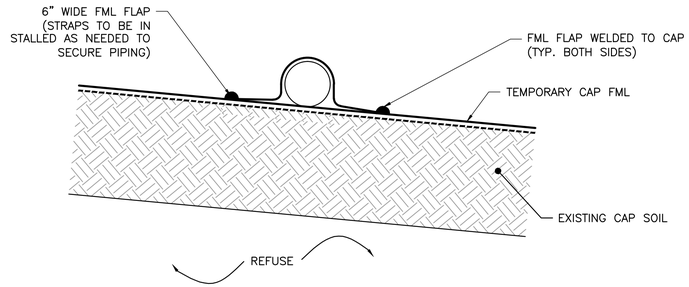

ABOVE CAP PIPE ANCHOR

DETAIL SCALE: NOT TO SCALE 3/4

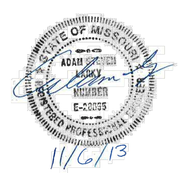

REV	DATE	DESCRIPTION	DWN BY	DES BY	CHK BY	APP BY
2	11/4	UPDATED DRAWING TITLE	PJL	TAB	TAB	ASL

DATE OF ISSUE 07/25/13
DRAWN BY PJL
DESIGNED BY TAB
CHECKED BY TAB
APPROVED BY ASL

CORNERSTONE Environmental Group, LLC

This drawing represents intellectual property of Cornerstone Environmental Group, LLC. Any modification to the original by other than Cornerstone Environmental Group, LLC personnel violates its original purpose and as such is rendered void. Cornerstone Environmental Group, LLC will not be held liable for any changes made to this document without express written consent of the originator.

BRIDGETON LANDFILL, LLC.
BRIDGETON LANDFILL
BRIDGETON, MISSOURI
CONSTRUCTION PLAN FOR
~~CONTINGENT~~ NORTH QUARRY ENHANCED GCCS
DETAILS

SHEET NO. **4**
PROJECT NO. 130557

1" 1/2" 0" 1"

File: X:\PROJECTS\BRIDGETON (MO)\130557 - North Quarry GCCS Evaluation\PROJ DWGS\REVISION NOVEMBER\BRDG0504a.dwg Layout: DETAILS-4 User: peter.larson Nov 06, 2013 - 2:16pm

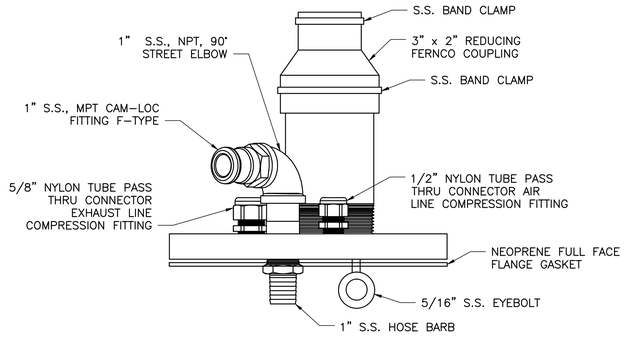

SIDE VIEW

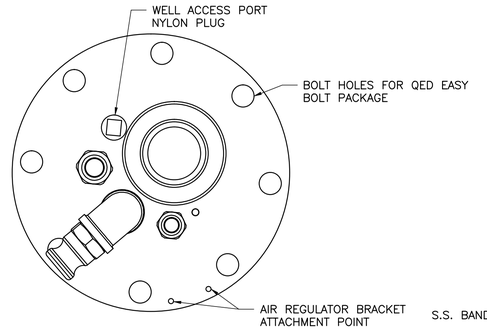

PLAN VIEW

DUAL EXTRACTION FLANGE COMPONENTS

DETAIL 1/5
SCALE: NOT TO SCALE

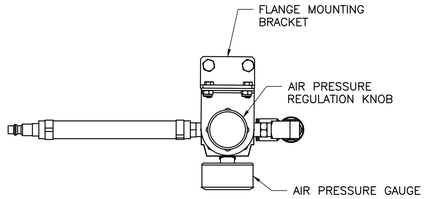

PLAN VIEW

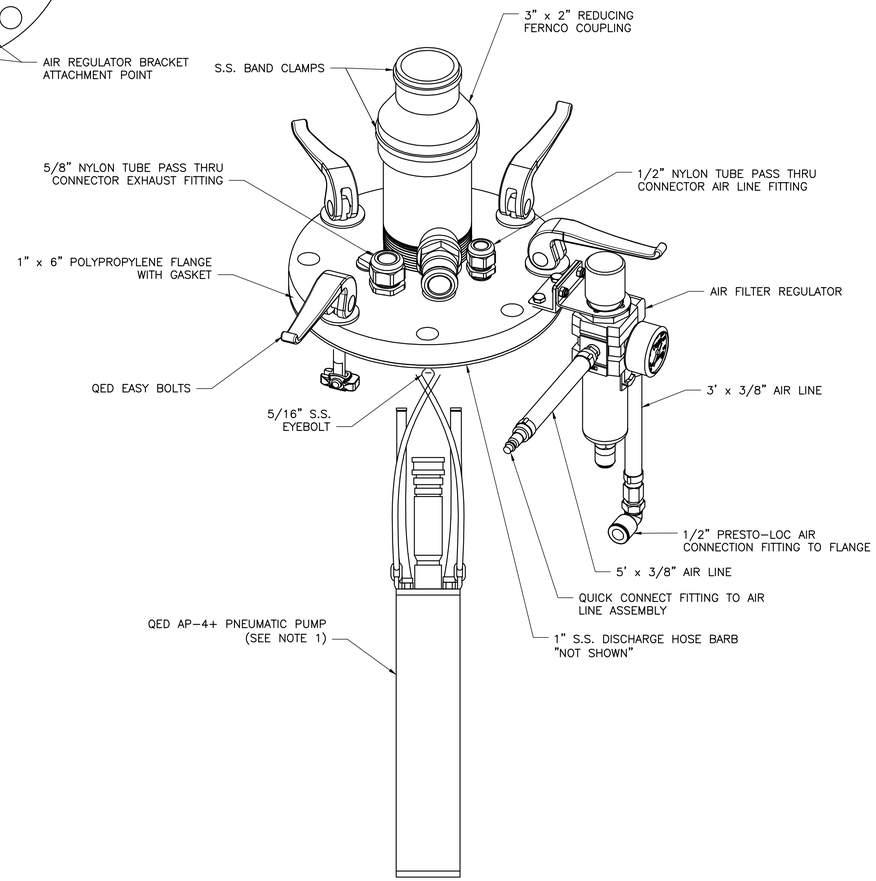

CONDENSATE EXTRACTION FLANGE ASSEMBLY (COLD CLIMATE PACKAGE)

DETAIL 3/5
SCALE: NOT TO SCALE

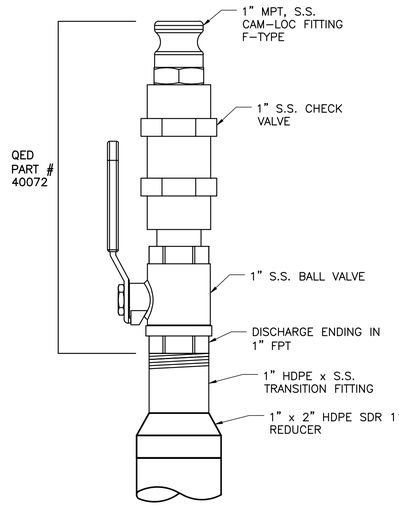

PUMP DISCHARGE ASSEMBLY

DETAIL 4/5
SCALE: NOT TO SCALE

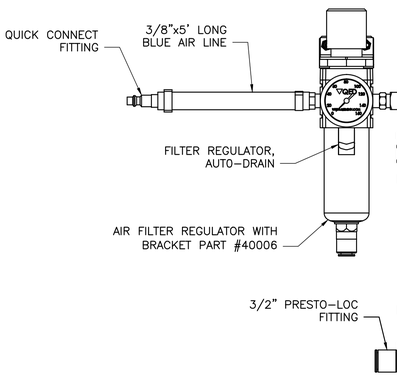

SIDE VIEW

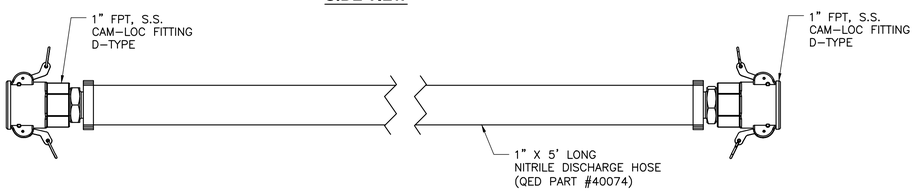

DUAL EXTRACTION WELL AIR REGULATOR AND DISCHARGE LINE

DETAIL 2/5
SCALE: NOT TO SCALE

NOTES:

1. QED AP-4+ PNEUMATIC PUMP SHOWN FOR REFERENCE PURPOSES ONLY. PUMP IS NOT INCLUDED WITH FLANGE PACKAGE.
2. AIR LINE AND FORCE MAIN ASSEMBLIES TO BE CONFIGURED FOR COLD CLIMATES.
3. PUMP TO BE SET 1-FT OFF THE BOTTOM OF THE SUMP.
4. PUMP EXHAUST PORTS TO BE FITTED WITH THROTTLING NEEDLE VALVE.

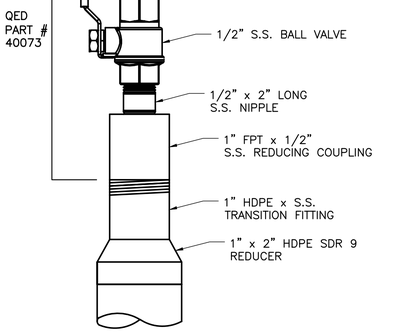

AIR SUPPLY LINE VALVE

DETAIL 5/5
SCALE: NOT TO SCALE

STATE OF MISSOURI
ADAM T. ANDERSON
NOTARIAL SEAL
NOTARY PUBLIC
NUMBER
E-20055
JEFFERSON COUNTY
COMMISSIONED PROFESSIONAL ENGINEER
11/6/13

REV	DATE	DESCRIPTION	DWN BY	DES BY	CHK BY	APP BY
2	11/4	UPDATED DRAWING TITLE	PJL	TAB	TAB	ASL

DATE OF ISSUE 07/25/13
DRAWN BY PJL
DESIGNED BY TAB
CHECKED BY TAB
APPROVED BY ASL

CORNERSTONE Environmental Group, LLC

This drawing represents intellectual property of Cornerstone Environmental Group, LLC. Any modification to the original or other than Cornerstone Environmental Group, LLC personnel violates its original purpose and as such is rendered void. Cornerstone Environmental Group, LLC will not be held liable for any changes made to this document without express written consent of the originator.

BRIDGETON LANDFILL, LLC.
BRIDGETON LANDFILL
BRIDGETON, MISSOURI
CONSTRUCTION PLAN FOR
~~CONTINGENT~~ NORTH QUARRY ENHANCED GCCS
DETAILS

SHEET NO. **5**
PROJECT NO. 130557

1" 1/2" 0"

File: X:\PROJECTS\BRIDGETON (MO)\130557 - North Quarry GCCS Evaluation\PROJ DWGS\REVISION NOVEMBER\#DBL SIZ\SDS5s.dwg Layout: DETAILS 5 User: peter.larson Nov 06, 2013 - 2:20pm

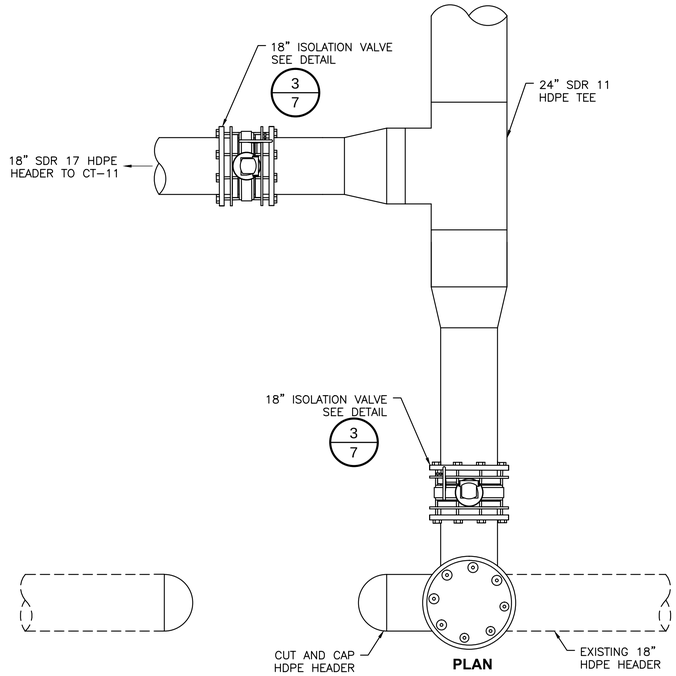

PLAN

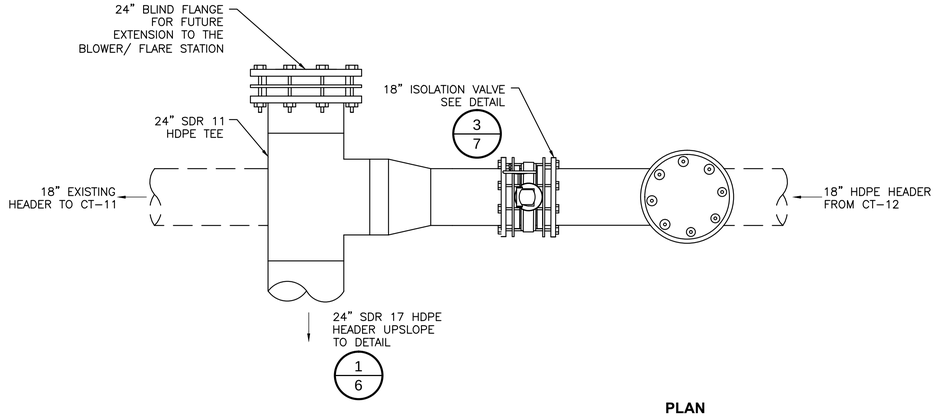

PLAN

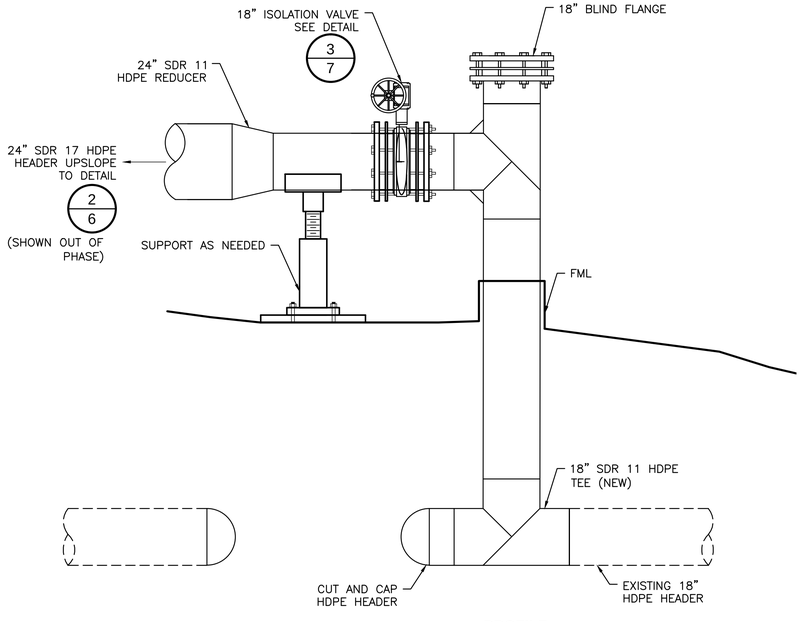

PROFILE

WEST HEADER TIE-IN

DETAIL 1/6

SCALE: NOT TO SCALE

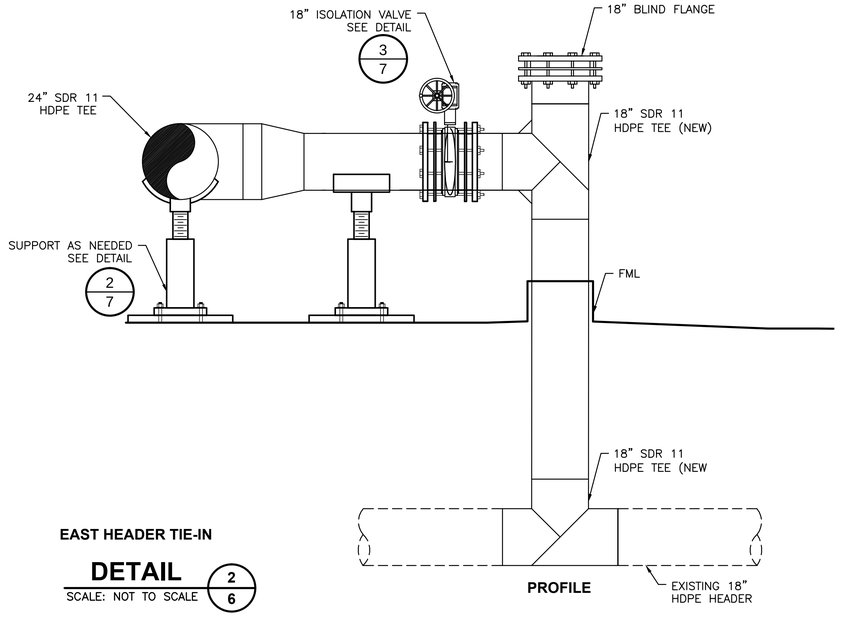

PROFILE

EAST HEADER TIE-IN

DETAIL 2/6

SCALE: NOT TO SCALE

STATE OF MISSOURI
ADAM STEVEN
LARKY
NUMBER
E-28095
REGISTERED PROFESSIONAL ENGINEER
11/6/13

REV	DATE	DESCRIPTION	DWN BY	DES BY	CHK BY	APP BY
2	11/4	UPDATED DRAWING TITLE	PJL	TAB	TAB	ASL

DATE OF ISSUE 10/04/13

DRAWN BY PJL
DESIGNED BY TAB
CHECKED BY TAB
APPROVED BY ASL

CORNERSTONE Environmental Group, LLC

This drawing represents intellectual property of Cornerstone Environmental Group, LLC. Any modification to the original by other than Cornerstone Environmental Group, LLC personnel violates its original purpose and as such is rendered void. Cornerstone Environmental Group, LLC will not be held liable for any changes made to this document without express written consent of the originator.

BRIDGETON LANDFILL, LLC.
BRIDGETON LANDFILL
BRIDGETON, MISSOURI
CONSTRUCTION PLAN FOR
~~CONTINGENT~~ NORTH QUARRY ENHANCED GCCS
DETAILS

SHEET NO. 6

PROJECT NO. 130557

File: X:\PROJECTS\BRIDGETON (MO)\130557 - North Quarry GCCS Evaluation\PROJ DWGS\REVISION NOVEMBER\BOBCDS06.dwg Layout: DETAILS-6 User: peter.larson Nov 06, 2013 - 3:11pm

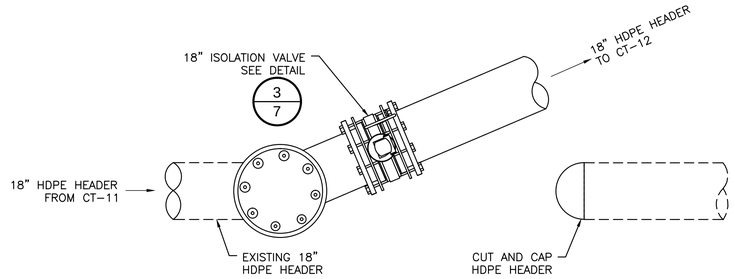

PLAN

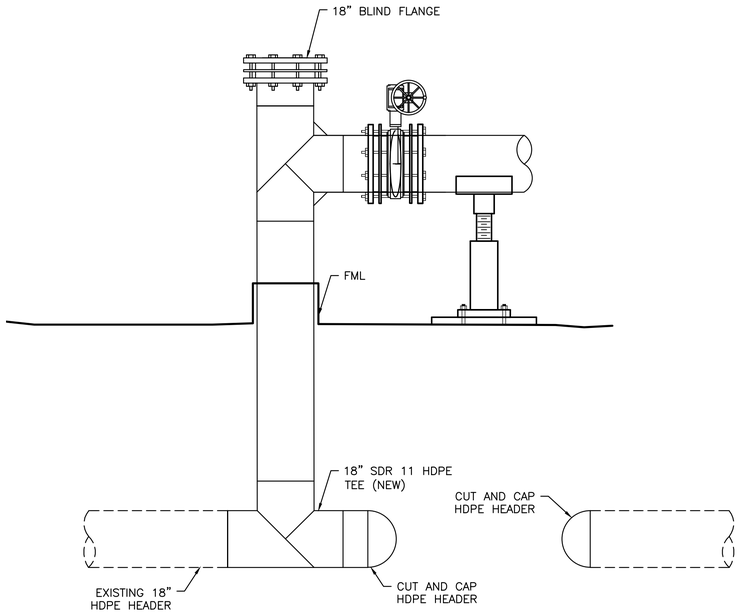

PROFILE

NORTH HEADER TIE-IN

DETAIL 1/7

SCALE: NOT TO SCALE

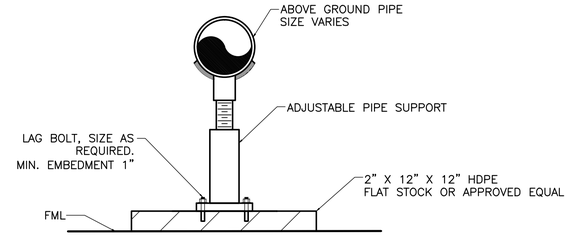

ADJUSTABLE PIPE SUPPORT

DETAIL 2/7

SCALE: NOT TO SCALE

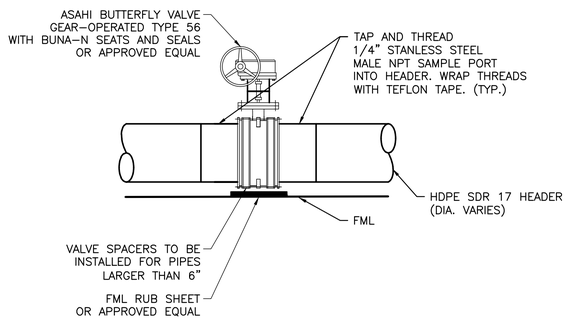

ABOVE GRADE HEADER ISOLATION VALVE

DETAIL 3/7

SCALE: NOT TO SCALE

NOTES

1. NUTS, BOLTS, AND WASHERS SHALL BE HOT-DIP GALVANIZED. STAINLESS STEEL BOLTS AND NUTS WILL NOT BE PERMITTED.

STATE OF MISSOURI
ADAM STEVEN
LARKY
NUMBER
E-28055
REGISTERED PROFESSIONAL ENGINEER

11/6/13

REV	DATE	DESCRIPTION	DWN BY	DES BY	CHK BY	APP BY
2	11/4	UPDATED DRAWING TITLE	PJL	TAB	TAB	ASL

DATE OF ISSUE

DRAWN BY PJL
DESIGNED BY TAB
CHECKED BY TAB
APPROVED BY ASL

CORNERSTONE Environmental Group, LLC

This drawing represents intellectual property of Cornerstone Environmental Group, LLC. Any modification to the original by other than Cornerstone Environmental Group, LLC personnel violates its original purpose and as such is rendered void. Cornerstone Environmental Group, LLC will not be held liable for any changes made to this document without express written consent of the originator.

BRIDGETON LANDFILL, LLC.
BRIDGETON LANDFILL
BRIDGETON, MISSOURI
CONSTRUCTION PLAN FOR
~~CONTINGENT~~ NORTH QUARRY ENHANCED GCCS
DETAILS

SHEET NO.
7

PROJECT NO.
130557

File: X:\PROJECTS\BRIDGETON (MO)\130557 - North Quarry GCCS Evaluation\PROJ DWGS\REVISION NOVEMBER\BRIDGCDS06.dwg Layout: DETAILS- 7 User: peterlarson Nov 06, 2013 - 3:11pm

APPENDIX D

DESIGN CALCULATIONS

COMPUTATION SHEET

PROJECT TITLE: Bridgeton NQ Landfill PROJECT NO: 130557

DESCRIPTION: Vertical Well ROI Calculation CALC NO: _____ SHEET 1 OF 5

PREP. BY: TAB DATE: 9-26-13 CHKD BY: _____ DATE: _____

Required: Determine the radius of influence (ROI) for vertical LFG extraction wells, using both EMCON and NSPS methods for the average flow rate condition.

Purpose: The ROI is calculated in the design of an active gas extraction system to properly locate extraction wells. The location of the extraction well will dictate the well depth, once the refuse depth is known. A detail of each well can then be created with respect to total well depth, depth to slotted pipe, applied vacuum and rate of extraction.

Although horizontal collectors are not modeled directly by this analysis, the effected flow patterns developed by horizontal collectors are analogous to those created by vertical extraction wells. The net result is that vertical well spacing criteria can be translated directly to horizontal collectors in a similar environment.

Method: The following methods were used to estimate the theoretical ROI for an LFG extraction well.

A) EMCON Method (from *Methane Generation and Recovery from Landfills*, EMCON, 1982, pg. 81)

$$Q_w = \frac{k \pi R^2 t D r}{C}$$

where:
- Q_w = individual extraction well LFG flow rate [L/s]
- k = conversion factor (1.157×10^{-8}) [(L/s)/(mL/day)]
- R = radius of influence [m]
- t = perforated pipe length [m]
- D = in-place refuse density [kg/m^3]
- r = methane production rate [mL/kg/day]
- C = fractional methane concentration [-]

1. Noting that the methane production rate (r) divided by the fractional methane concentration (C) is equal to the LFG production rate (G), and solving for the ROI yields:

$$R = \left(\frac{Q_w}{k \pi t D G} \right)^{1/2}$$

2. Converting from metric to English units yields the following conversion factors (allowing input in English units):

Q_w (from cfm to L/s):

$$\frac{1\ ft^3}{min} \times \frac{1\ min}{60\ sec} \times \frac{28.317\ L}{ft^3} = 0.47195$$

t (from ft to m):

$$1\ ft \times \frac{0.3048\ m}{ft} = 0.3048$$

D (from lb/cy to kg/m^3):

$$\frac{1\ lb}{1\ cy} \times \frac{0.4536\ kg}{1\ lb} \times \frac{1\ cy}{27\ ft^3} \times \left(\frac{1\ ft}{0.3048\ m}\right)^3 = 0.5932$$

In addition, converting G from flow per volume to flow per mass equals:
G (from cfm/cy to mL/kg/day):

$$\frac{1\ ft^3}{min\ yd^3} \times \left(\frac{1}{D} \times \frac{1\ yd^3}{1\ lb}\right) \times \frac{60\ min}{1\ hr} \times \frac{24\ hr}{1\ day} \times \frac{28.317\ L}{ft^3} \times \frac{1\ lb}{0.4536\ kg} \times \frac{1000\ mL}{L}$$

$$= \frac{89{,}895{,}238}{D}$$

Therefore:

$$R = \left[\frac{0.47195 Q_w}{1.157 \times 10^{-8}\ \pi\ (0.3048t)\ (0.5932D)\left(\frac{89{,}895{,}238}{D} \times G\right)}\right]^{1/2}$$

Where: R is in meters
Q_w is in cfm
t is in feet
D is in lb/cy
G is in cfm/cy

Then:

$$R = 0.8938\left(\frac{Q_w}{t\,G}\right)^{1/2}$$

Converting results from meters to feet (1 ft = 0.3048 m):

$$0.3048R = 0.8938\left(\frac{Q_w}{t\,G}\right)^{1/2}$$

$$R = 2.932\left(\frac{Q_w}{t\,G}\right)^{1/2}$$

B) NSPS Method (from EPA *NSPS Bid*, 1991, pg. G-1)

$$R = \left(\frac{Q_w\,DC}{\pi\,L\,\rho\,Q_{gen}\,\eta}\right)^{1/2}$$

Where:
- ρ = in-place density of refuse [kg/m^3]
- Q_w = LFG flow rate per well [m^3/s]
- DC = design capacity of landfill [kg]
- L = perforated pipe length [m]
- Q_{gen} = peak LFG generation rate [m^3/s]
- η = system collection efficiency [%]
- R = radius of influence [m]

1. Converting from metric to English units yields the following conversion factors (allowing input in English units):

Q_w (from cfm to m^3/s):

$$\frac{1\text{ ft}^3}{1\text{ min}} \times \frac{1\text{ min}}{60\text{ sec}} \times \left(\frac{0.3048\text{ m}}{\text{ft}}\right)^3 = 4.719\text{x}10^{-4}$$

DC (from tons to kg):

$$1\text{ ton} \times \frac{2{,}000\text{ lb}}{1\text{ ton}} \times \frac{0.4536\text{ kg}}{1\text{ lb}} = 907.2$$

L (from ft to m):

$$1 \text{ ft} \times \frac{0.3048 \text{ m}}{\text{ft}} = 0.3048$$

ρ (from lb/cy to kg/m^3):

$$\frac{1 \text{ lb}}{\text{yd}^3} \times \frac{0.4536 \text{ kg}}{1 \text{ lb}} \times \frac{1 \text{ yd}^3}{27 \text{ ft}^3} \times \left(\frac{1 \text{ ft}}{0.3048 \text{ m}}\right)^3 = 0.5933$$

Converting results from meters to feet (1 ft = 0.3048 m):

$$0.3048R = \left[\frac{(4.719 \times 10^{-4})\, Q_w\, (907.2)\, DC}{\pi\, (0.3048L)\, (0.5933\rho)\, (4.719 \times 10^{-4} Q_{gen})\, \eta}\right]^{1/2}$$

$$R = \frac{1}{0.3048}\left[\frac{(4.719 \times 10^{-4})\, Q_w\, (907.2)\, DC}{\pi\, (0.3048L)\, (0.5933\rho)\, (4.719 \times 10^{-4} Q_{gen})\, \eta}\right]^{1/2}$$

Example Calculation:

Estimate the ROI for the following average LFG flow rate condition at the XYZ Landfill

Given:

Design Capacity	=	2.5 x 10^7 tons
Collection efficiency	=	70%
Average LFG generation rate	=	2,469 scfm
In-place refuse density	=	1,400 lb/cy
Depth of well	=	100 ft
Well flow rate	=	26 scfm

A) EMCON Method

$$R = 2.932\left(\frac{26 \text{ scfm}}{(100 \text{ ft})\left(\frac{2{,}469 \text{ scfm}}{25{,}000{,}000 \text{ tons}}\right)\left(\frac{1 \text{ ton}}{2{,}000 \text{ lb}}\right)\left(\frac{1{,}400 \text{ lb}}{1 \text{ cy}}\right)}\right)^{1/2}$$

R = 180 ft

B) NSPS Method

$$R = \frac{1}{0.3048}\left[\frac{(4.719\text{x}10^{-4})(26\ \text{scfm})(907.2)(25{,}000{,}000\ \text{tons})}{\pi\ (0.3048)(100\ \text{ft})(0.5933)(1{,}400\ \text{lb / cy})(4.719\text{x}10^{-4})(2{,}469\ \text{scfm})(0.70)}\right]^{1/2}$$

R = 215 ft

Site Specific Calculations:

ROI calculations for the Bridgeton NQ Landfill are shown on the attached spreadsheets (Tables D-1 and D-2). These calculations were performed for a series of typical well depths, ranging from 40 feet to 140 feet and will be utilized as the basis for determining well placement across the selected area of the Project.

Calculations for the existing wellfield conditions, as well as for the projected SSE conditions, are provided.

COMPUTATION SHEET

PROJECT TITLE: Bridgeton NQ Landfill PROJECT NO: 130275

DESCRIPTION: Well Spacing Calculation CALC NO: _____ SHEET 1 OF 2

PREP. BY: TAB DATE: 9-26-13 CHKD BY: _____ DATE: _____

Required: Determine the appropriate spacing between extraction wells, based upon the EMCON radius of influence (ROI) calculations.

Purpose: The well spacing is calculated in order to achieve the most optimum coverage of the fill area, and to extract the maximum amount of available landfill gas in the most efficient manner. Wells spaced too far apart allow some fill areas to remain relatively unaffected by the extraction system. Conversely, wells spaced too closely fight each other for available landfill gas within a local landfill volume, wasting power available for system operations and increasing the difficulty of maintaining a properly balanced wellfield.

Method: In determining the spacing of extraction wells, the calculated ROI is utilized to approximate the local volume of affected fill area. It is typical to include a degree of overlap between the extraction wells, to accommodate the generally heterogeneous nature of the refuse.

To calculate the nominal spacing between extraction wells, the wellfield must be developed in a relatively uniform "honeycomb" fashion. Theoretically, if a cluster of three wells are spaced at a distance:

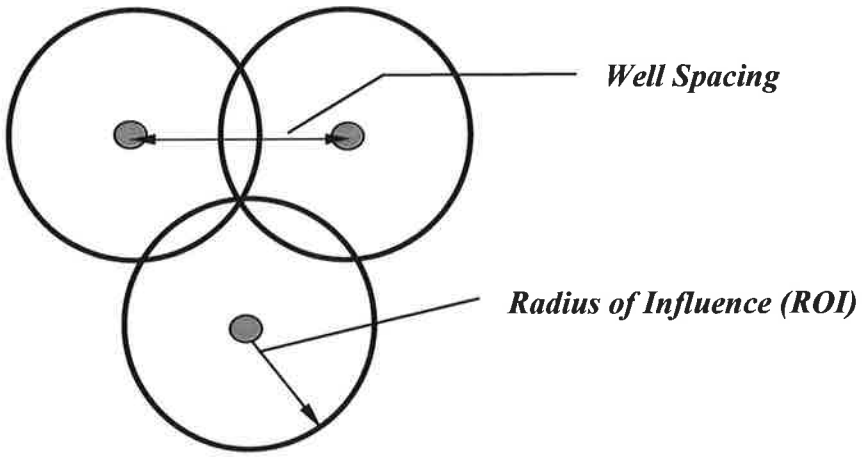

Where:

Well Spacing $= \sqrt{3} * (ROI)$ or Well Spacing $= 1.732 * (ROI)$

In the event that wells of two different ROIs are next to each other, as is common with wells of different depths and construction, the average ROI of the two may be used.

A well spacing at this frequency provides a uniform distribution of wells, with 100% coverage of the affected area. Although field conditions and the configuration of the wellfield area often dictate modifications to this configuration, utilization of this pattern of well spacing provides a uniform and operable wellfield spacing.

Site Specific Calculations:

Well spacing calculations for the Bridgeton NQ Landfill are shown on the attached spreadsheets (Tables D-1 and D-2). These calculations were performed for a series of typical well depths, ranging from 40 feet to 140 feet and will be utilized as the basis for determining well placement across the selected area of the Project.

The wellfield shall be constructed to conform to these design criteria. Some slight local variations may occur due to the location of access roads, or similar structures, but only in limited situations. These local variations should not affect the overall performance of the system.

Proper spacing of the extraction wells should allow the technicians full control over landfill gas production and movement, and deter the occurrence of surface emissions of landfill gas constituents.

Table D-1
Landfill Gas Multiple Extraction Well Radii of Influence and Well Spacings
Based on Volume of Affected Refuse
Bridgeton NQ Landfill

Existing Conditions

Well Number	Well Depth (ft)	LFG Flow Rate Condition	LFG Flow Rate (scfm)	Radius of Influence (ft)[a][b]		Average Well Spacing (ft)
				NSPS	EMCON	(Based upon EMCON ROI)
A	40	Average	10	94	92	160
B	60	Average	20	109	107	185
C	80	Average	30	116	113	196
D	100	Average	40	119	117	202
E	120	Average	50	134	131	226
F	140	Average	60	146	143	248

Design Capacity	2,837,993 tons		
Design Capacity	3,484,338 cy		
Refuse Density	1,629 lb/cy	Design LFG Generation Rate: (2013 LandGEM projection)	647 scfm
NSPS Collection Efficiency	85 %		

Notes:

a) Radius of influence based on the design capacity of the volume of affected refuse for typical extraction wells.
b) Radius of influence based on the design LFG generation rate as determined by projections.
c) LFG flow rates basd on September 2013 average flow of 0.5 scfm/ft of available perforation.

CORNERSTONE
Environmental Group, LLC

Table D-2
Landfill Gas Multiple Extraction Well Radii of Influence and Well Spacings
Based on Volume of Affected Refuse
Bridgeton NQ Landfill

Potential SSE Conditions

Well Number	Well Depth (ft)	LFG Flow Rate Condition	LFG Flow Rate (scfm)	Radius of Influence (ft)[a][b]		Average Well Spacing (ft)
				NSPS	EMCON	(Based upon EMCON ROI)
A	40	Average	30	164	89	154
B	60	Average	60	189	102	178
C	80	Average	90	200	109	188
D	100	Average	120	207	112	194
E	120	Average	150	231	126	217
F	140	Average	180	253	138	238

Design Capacity	2,837,993	tons
Design Capacity	3,484,338	cy
Refuse Density	1,629	lb/cy
NSPS Collection Efficiency	85	%

Design LFG Generation Rate: 2,100 scfm
(2013 LandGEM projection w/allowance for SSE)

Notes:

a) Radius of influence based on the design capacity of the volume of affected refuse for typical extraction wells.
b) Radius of influence based on the design LFG generation rate as determined by projections.
c) LFG flow rates based on a projected average flow of 1.5 scfm/ft of available perforation.

CORNERSTONE
Environmental Group, LLC

APPENDIX E

TREND ANALYSES

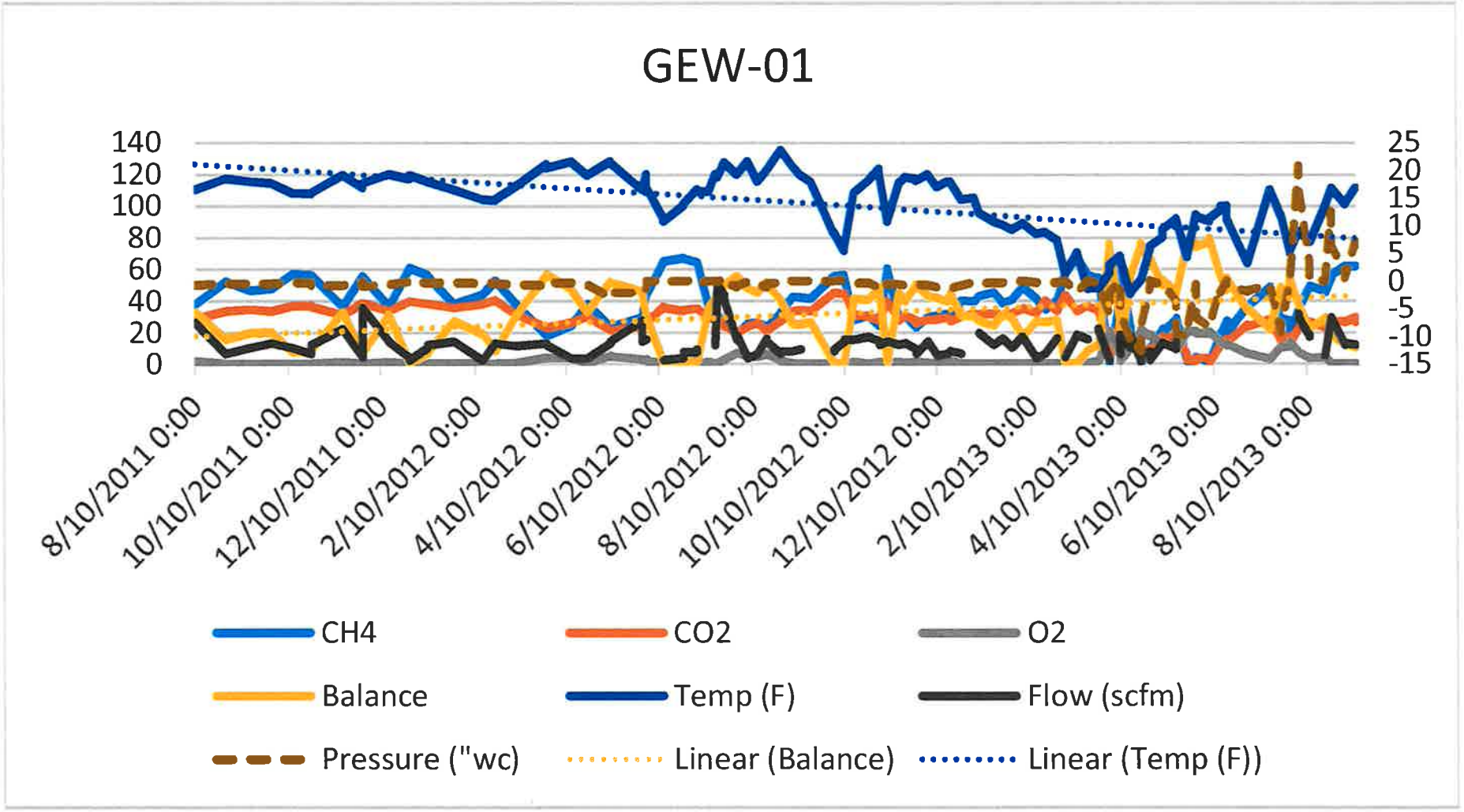
GEW-01
140
120
100
80
60
40
20
0
25
20
15
10
5
0
-5
-10
-15
8/10/2011 0:00
10/10/2011 0:00
12/10/2011 0:00
2/10/2012 0:00
4/10/2012 0:00
6/10/2012 0:00
8/10/2012 0:00
10/10/2012 0:00
12/10/2012 0:00
2/10/2013 0:00
4/10/2013 0:00
6/10/2013 0:00
8/10/2013 0:00
CH4
CO2
O2
Balance
Temp (F)
Flow (scfm)
Pressure ("wc)
Linear (Balance)
Linear (Temp (F))

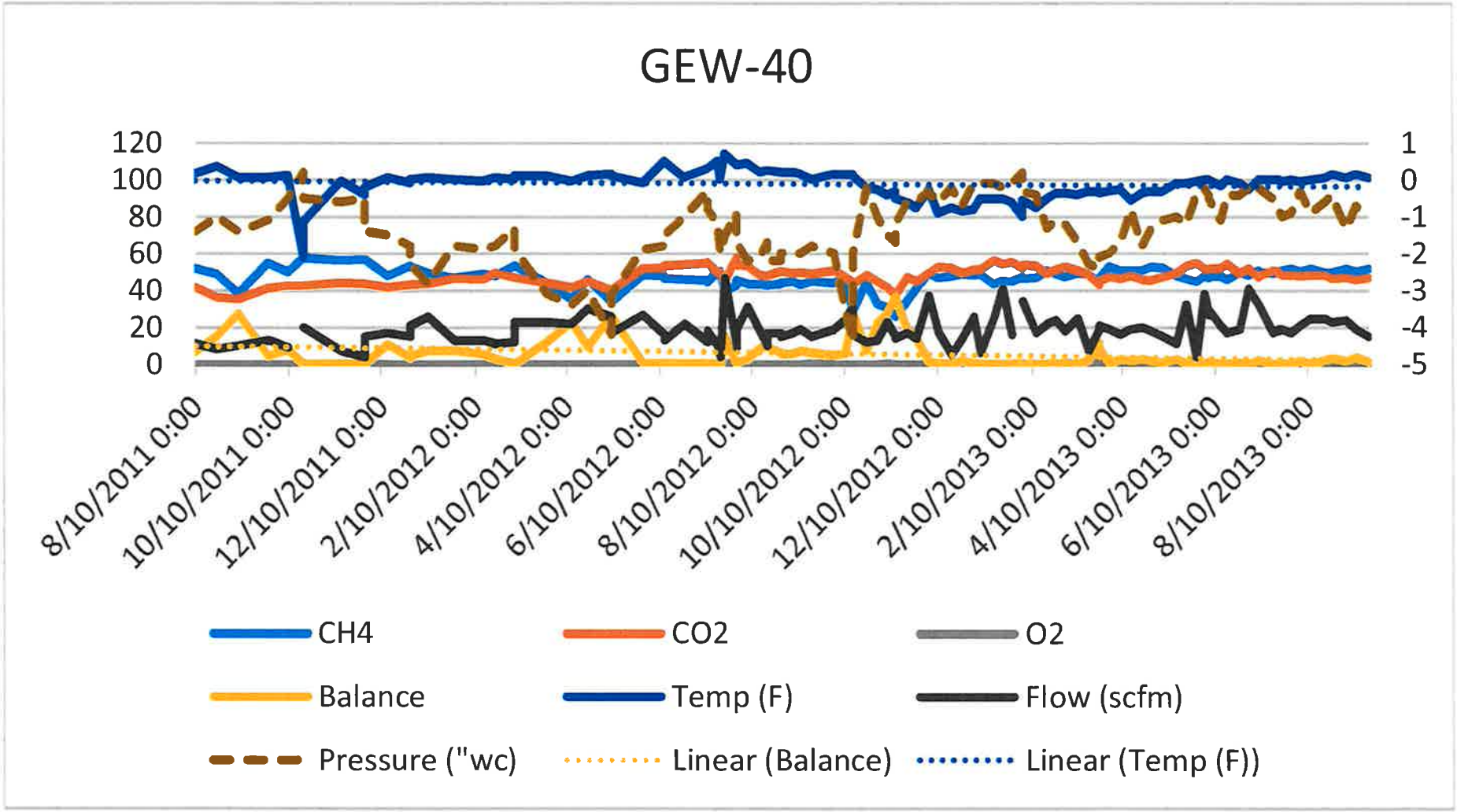
GEW-40
120
100
80
60
40
20
0
1
0
-1
-2
-3
-4
-5
8/10/2011 0:00
10/10/2011 0:00
12/10/2011 0:00
2/10/2012 0:00
4/10/2012 0:00
6/10/2012 0:00
8/10/2012 0:00
10/10/2012 0:00
12/10/2012 0:00
2/10/2013 0:00
4/10/2013 0:00
6/10/2013 0:00
8/10/2013 0:00
CH4
CO2
O2
Balance
Temp (F)
Flow (scfm)
Pressure ("wc)
Linear (Balance)
Linear (Temp (F))

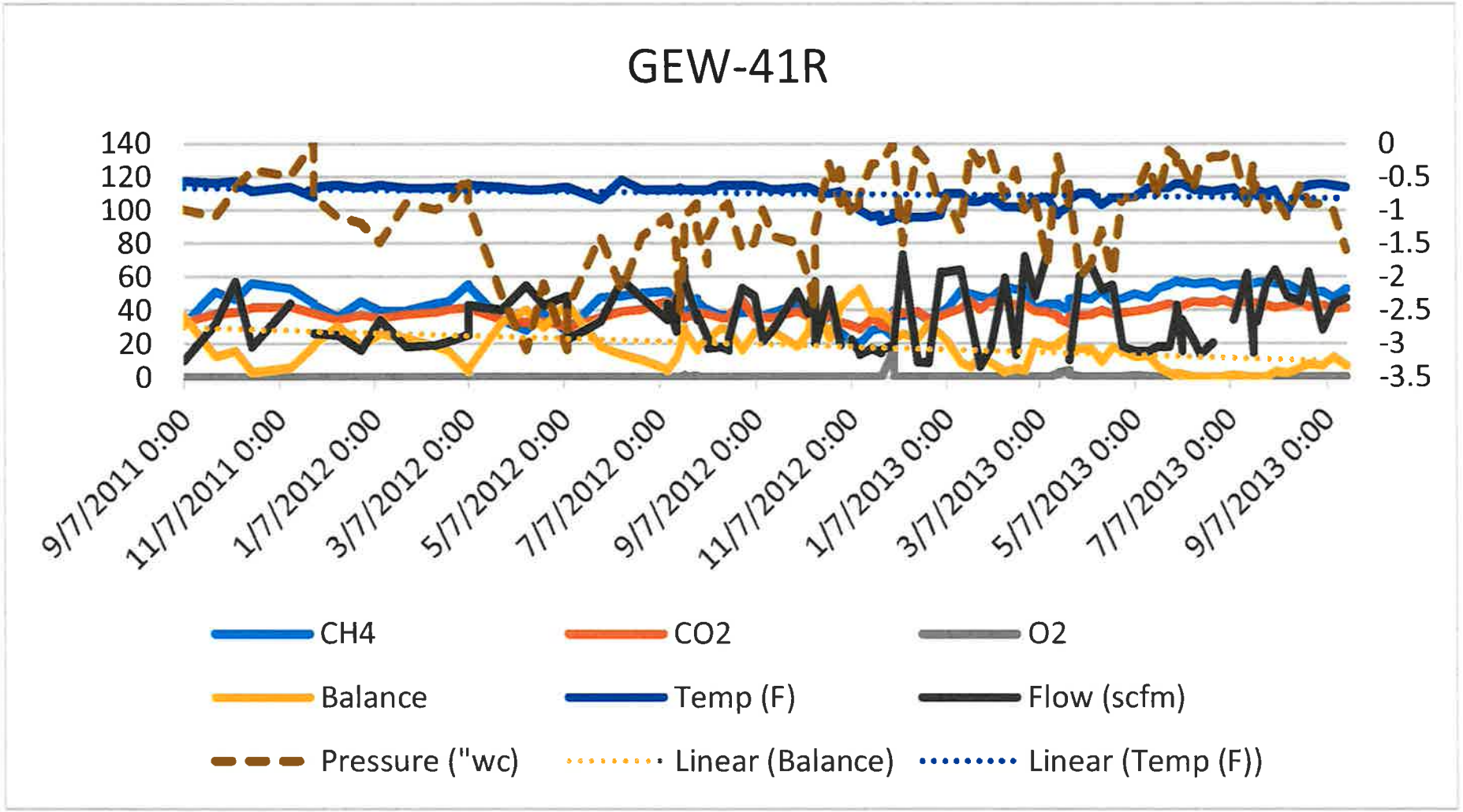
GEW-41R
140
120
100
80
60
40
20
0
0
-0.5
-1
-1.5
-2
-2.5
-3
-3.5
9/7/2011 0:00
11/7/2011 0:00
1/7/2012 0:00
3/7/2012 0:00
5/7/2012 0:00
7/7/2012 0:00
9/7/2012 0:00
11/7/2012 0:00
1/7/2013 0:00
3/7/2013 0:00
5/7/2013 0:00
7/7/2013 0:00
9/7/2013 0:00
CH4
CO2
O2
Balance
Temp (F)
Flow (scfm)
Pressure ("wc)
Linear (Balance)
Linear (Temp (F))

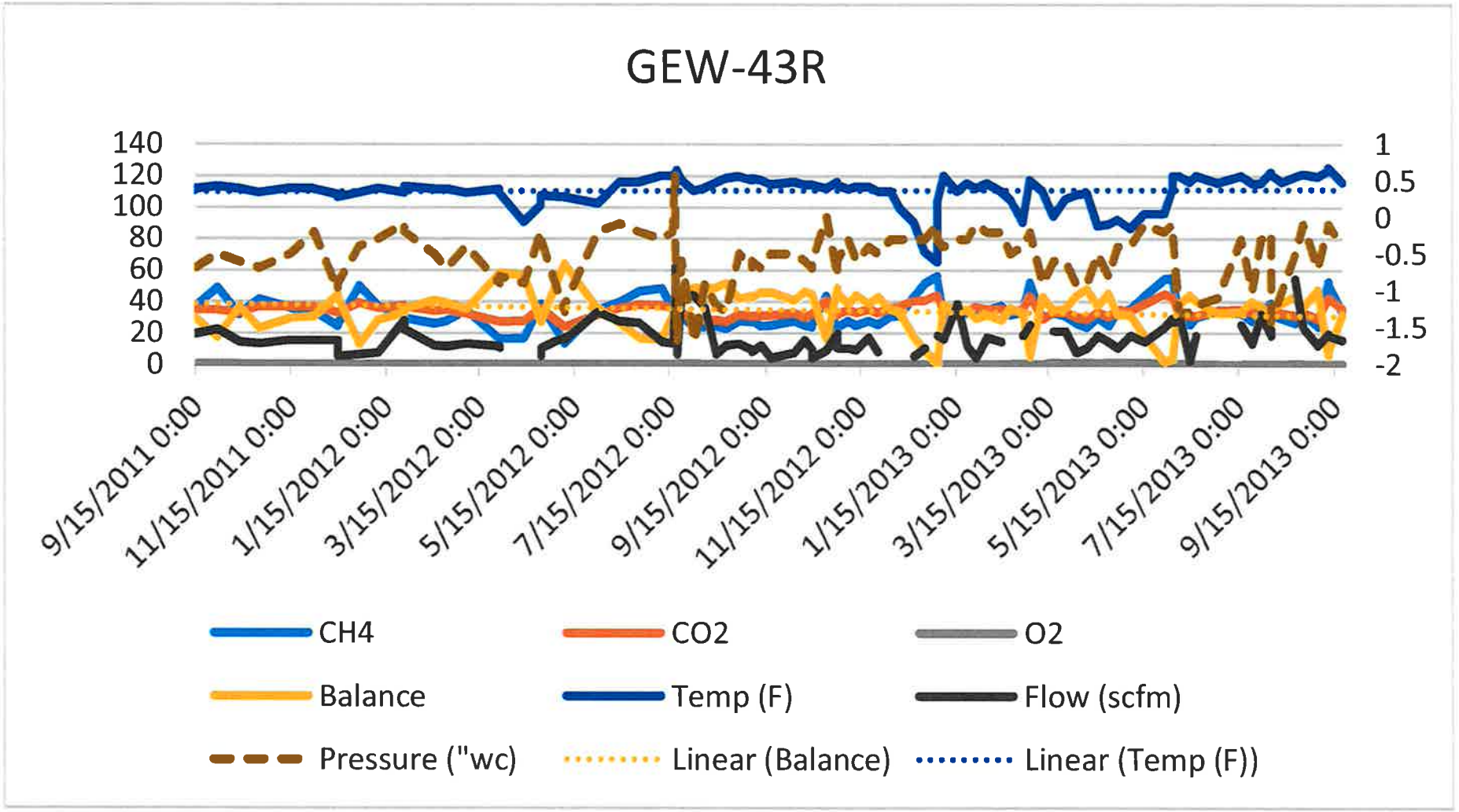
GEW-43R
140
120
100
80
60
40
20
0
1
0.5
0
-0.5
-1
-1.5
-2
9/15/2011 0:00
11/15/2011 0:00
1/15/2012 0:00
3/15/2012 0:00
5/15/2012 0:00
7/15/2012 0:00
9/15/2012 0:00
11/15/2012 0:00
1/15/2013 0:00
3/15/2013 0:00
5/15/2013 0:00
7/15/2013 0:00
9/15/2013 0:00
CH4
CO2
O2
Balance
Temp (F)
Flow (scfm)
Pressure ("wc)
Linear (Balance)
Linear (Temp (F))

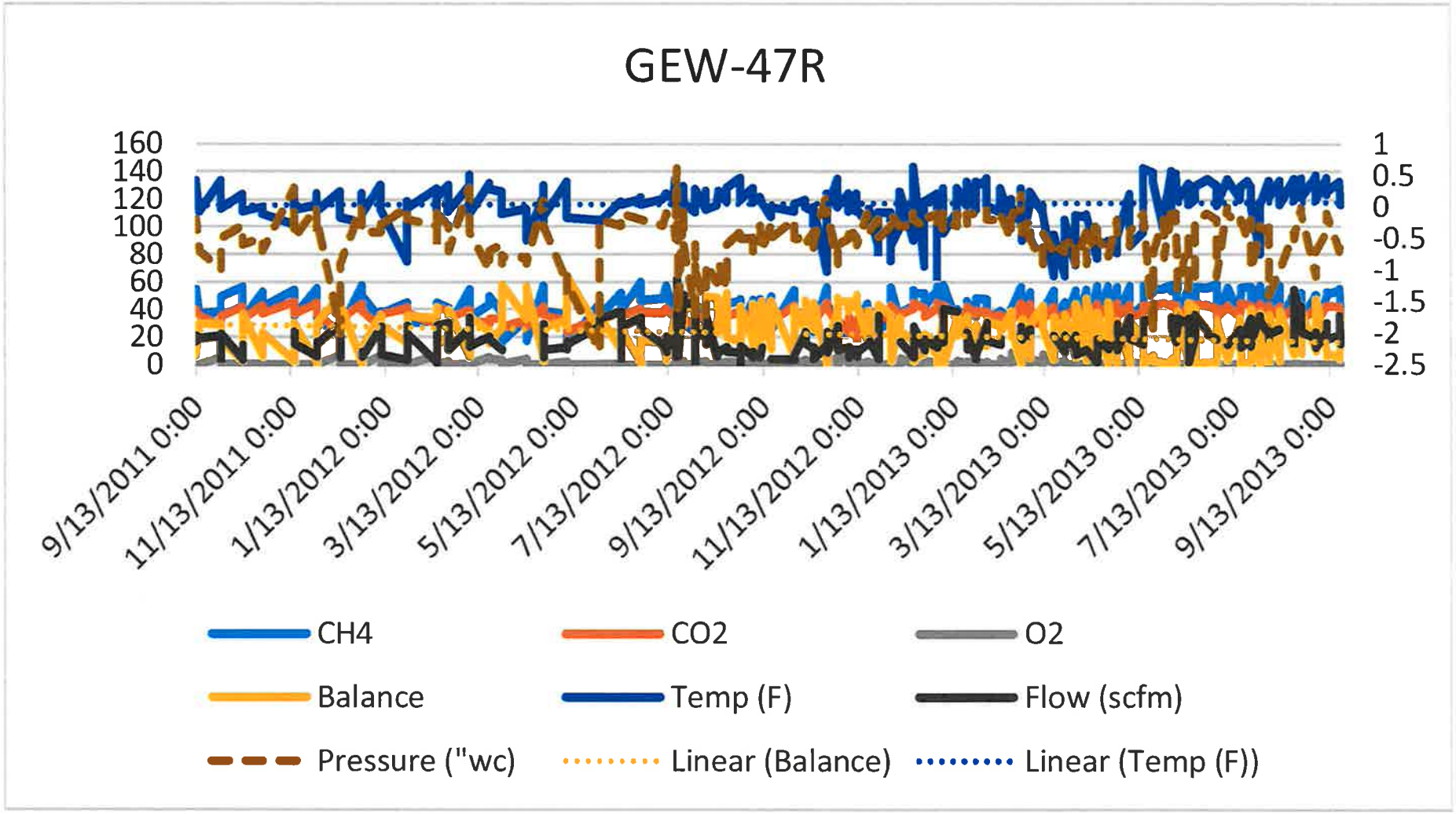
GEW-47R
160
140
120
100
80
60
40
20
0
1
0.5
0
-0.5
-1
-1.5
-2
-2.5
9/13/2011 0:00
11/13/2011 0:00
1/13/2012 0:00
3/13/2012 0:00
5/13/2012 0:00
7/13/2012 0:00
9/13/2012 0:00
11/13/2012 0:00
1/13/2013 0:00
3/13/2013 0:00
5/13/2013 0:00
7/13/2013 0:00
9/13/2013 0:00
CH4
CO2
O2
Balance
Temp (F)
Flow (scfm)
Pressure ("wc)
Linear (Balance)
Linear (Temp (F))

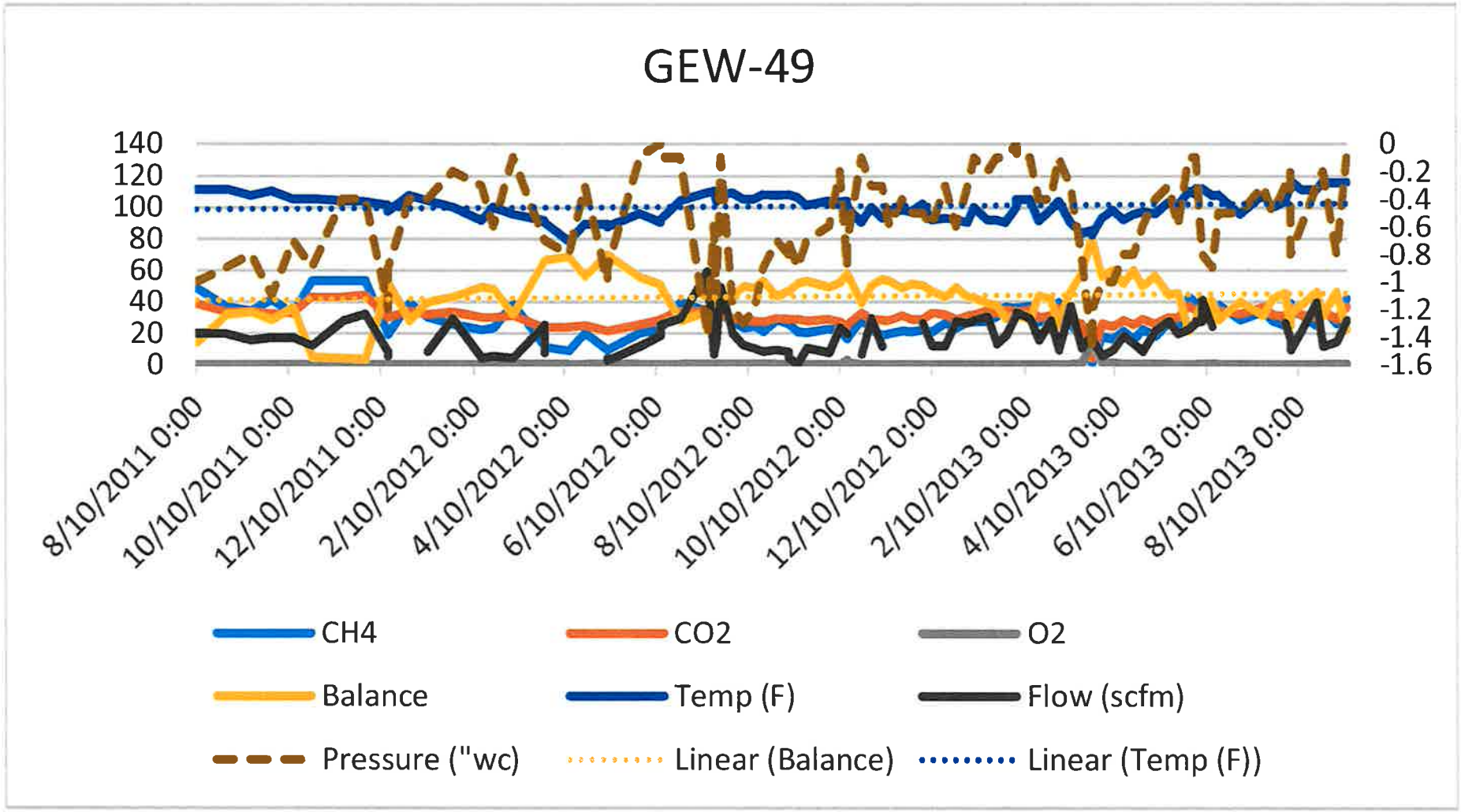
GEW-49
140
120
100
80
60
40
20
0
0
-0.2
-0.4
-0.6
-0.8
-1
-1.2
-1.4
-1.6
8/10/2011 0:00
10/10/2011 0:00
12/10/2011 0:00
2/10/2012 0:00
4/10/2012 0:00
6/10/2012 0:00
8/10/2012 0:00
10/10/2012 0:00
12/10/2012 0:00
2/10/2013 0:00
4/10/2013 0:00
6/10/2013 0:00
8/10/2013 0:00
CH4
CO2
O2
Balance
Temp (F)
Flow (scfm)
Pressure ("wc)
Linear (Balance)
Linear (Temp (F))

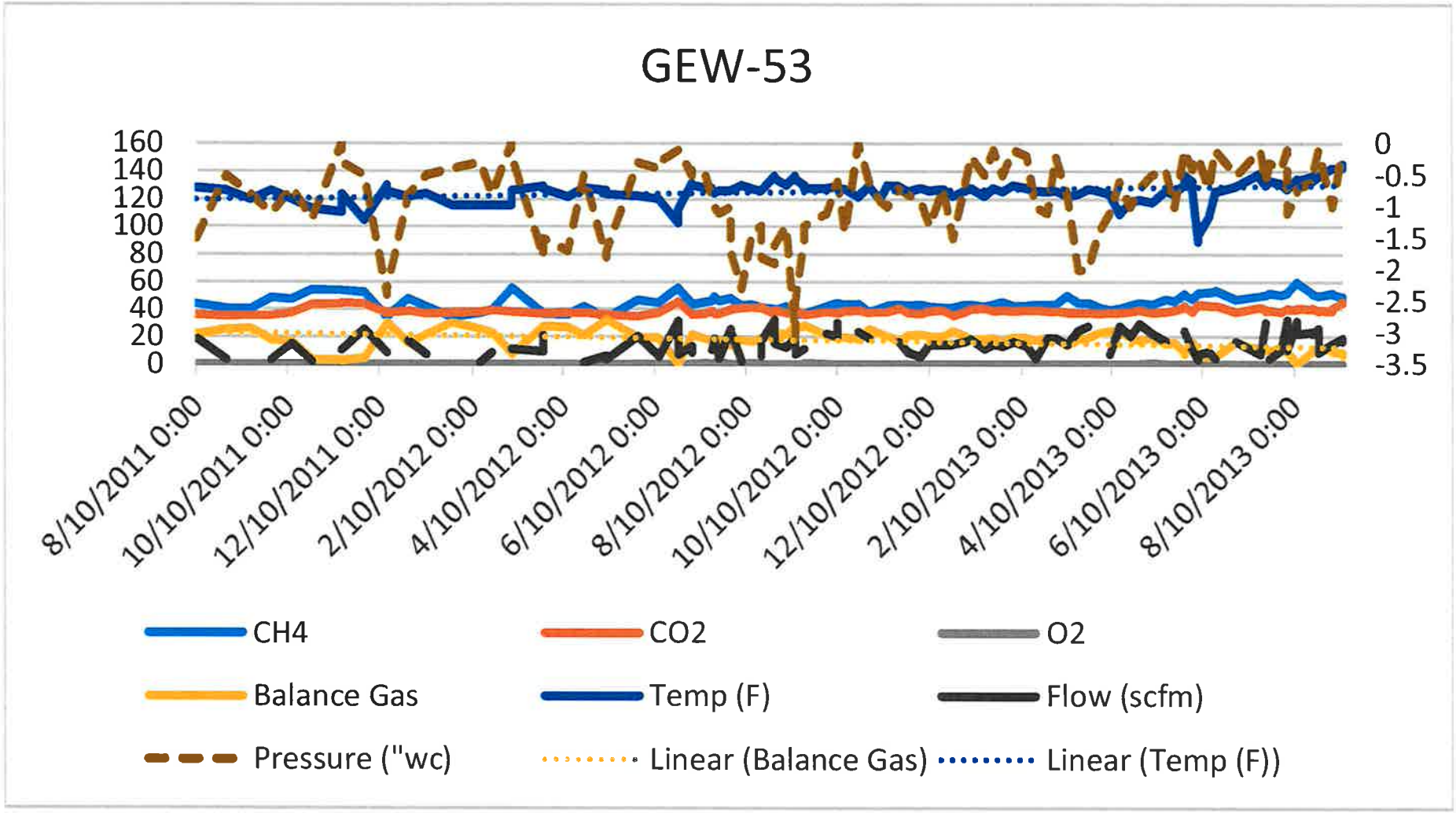
GEW-53
160
140
120
100
80
60
40
20
0
0
-0.5
-1
-1.5
-2
-2.5
-3
-3.5
8/10/2011 0:00
10/10/2011 0:00
12/10/2011 0:00
2/10/2012 0:00
4/10/2012 0:00
6/10/2012 0:00
8/10/2012 0:00
10/10/2012 0:00
12/10/2012 0:00
2/10/2013 0:00
4/10/2013 0:00
6/10/2013 0:00
8/10/2013 0:00
CH4
CO2
O2
Balance Gas
Temp (F)
Flow (scfm)
Pressure ("wc)
Linear (Balance Gas)
Linear (Temp (F))

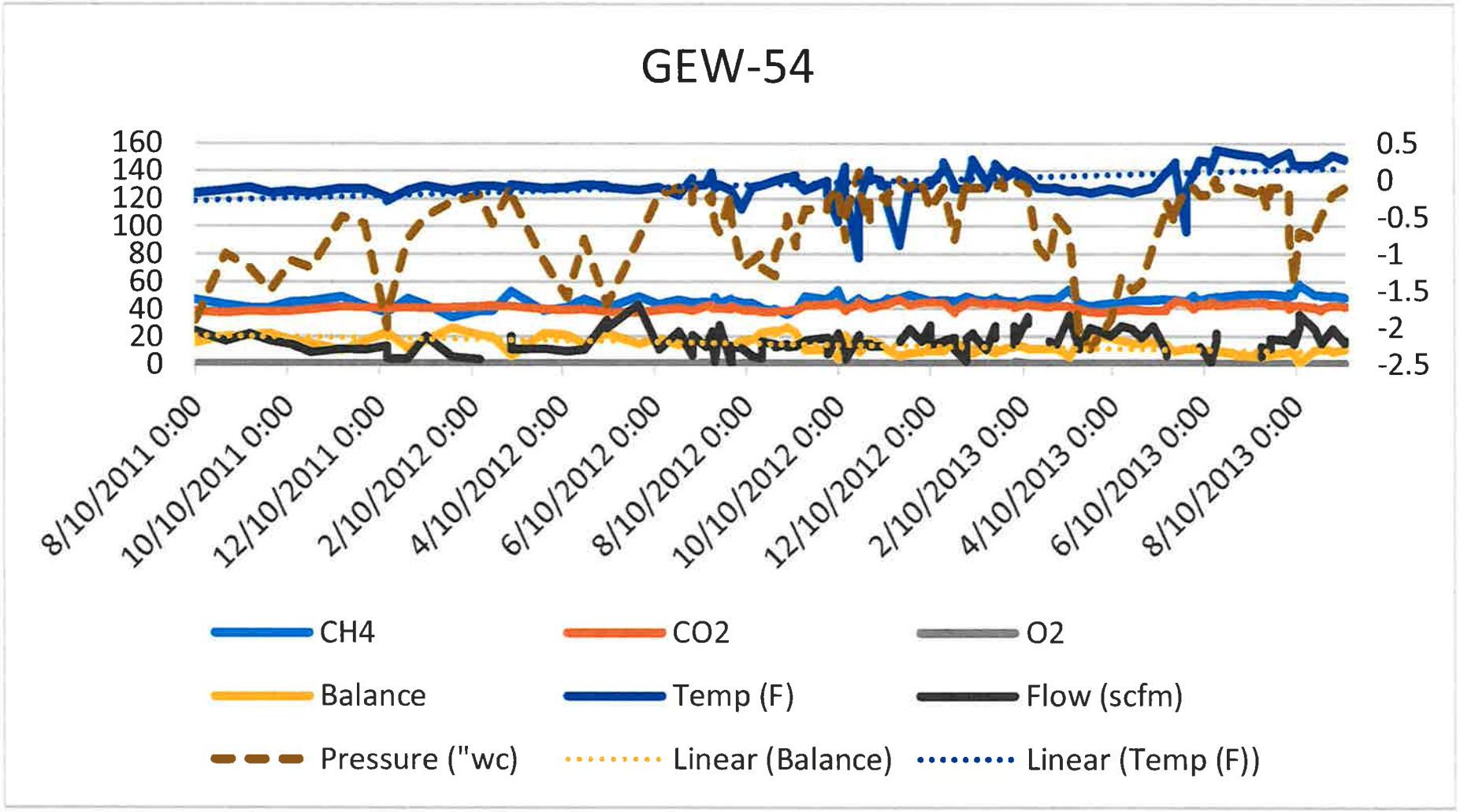
GEW-54
160
140
120
100
80
60
40
20
0
0.5
0
-0.5
-1
-1.5
-2
-2.5
8/10/2011 0:00
10/10/2011 0:00
12/10/2011 0:00
2/10/2012 0:00
4/10/2012 0:00
6/10/2012 0:00
8/10/2012 0:00
10/10/2012 0:00
12/10/2012 0:00
2/10/2013 0:00
4/10/2013 0:00
6/10/2013 0:00
8/10/2013 0:00
CH4
CO2
O2
Balance
Temp (F)
Flow (scfm)
Pressure ("wc)
Linear (Balance)
Linear (Temp (F))

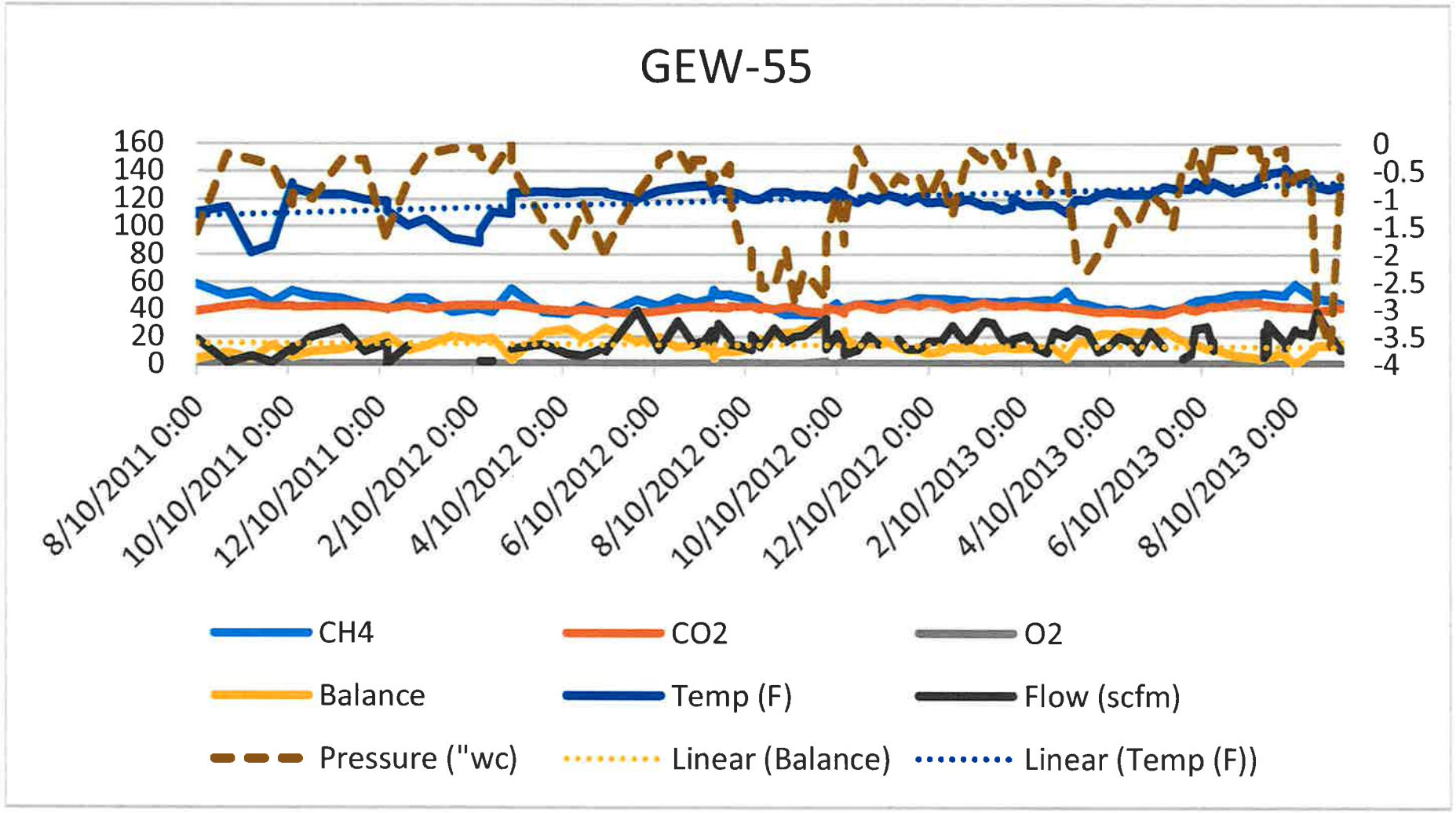
GEW-55
160
140
120
100
80
60
40
20
0
0
-0.5
-1
-1.5
-2
-2.5
-3
-3.5
-4
8/10/2011 0:00
10/10/2011 0:00
12/10/2011 0:00
2/10/2012 0:00
4/10/2012 0:00
6/10/2012 0:00
8/10/2012 0:00
10/10/2012 0:00
12/10/2012 0:00
2/10/2013 0:00
4/10/2013 0:00
6/10/2013 0:00
8/10/2013 0:00
CH4
CO2
O2
Balance
Temp (F)
Flow (scfm)
Pressure ("wc)
Linear (Balance)
Linear (Temp (F))

APPENDIX D

STORMWATER DESIGN REPORT

APPENDIX D

STORMWATER MANAGEMENT DESIGN REPORT

BRIDGETON LANDFILL NORTH QUARRY
EVOH GEOMEMBRANE CAP DESIGN

BRIDGETON, MISSOURI

Prepared for

Bridgeton Landfill, LLC
13570 St. Charles Rock Road
Bridgeton, Missouri 63044

July 2013
Revised October 2013

Prepared by

CORNERSTONE
Environmental Group, LLC
39395 W. Twelve Mile Road, Suite 103
Farmington Hills, Michigan 48331

Project 130520

Stormwater Management Design Report
Bridgeton Landfill North Quarry EVOH Geomembrane Cap Design
Bridgeton, Missouri

The material and data in this report were prepared under the supervision and direction of the undersigned.

Cornerstone Environmental Group, LLC

James Walker, P.E.
Senior Client Manager

Adam Larky, P.E.
Senior Client Manager

TABLE OF CONTENTS

LIST OF TABLES AND FIGURES ii

1 INTRODUCTION **1-1**

2 STORMWATER MANAGEMENT DESIGN **2-1**

2.1.1 North Quarry South Drainage Area (Subareas N1A-S, N1A-E) *2-3*
2.1.2 North Quarry East Drainage Area (Subareas N1B-N2, N1B-E, N1B-S1 and N1B-S2) *2-4*
2.1.3 North Quarry West Drainage Area (Subareas N1A-W, N1B-W1, N1B-W2, N1B-N1) *2-5*
2.1.4 North Quarry Northwest Drainage Area (Subarea N2-NW1) *2-6*
2.1.5 North Quarry Northeast Drainage Area (Subarea N2-NE1) *2-6*

3 CONCLUSIONS **3-1**

LIMITATIONS **1**

APPENDICES

APPENDIX A 25-YEAR 24-HOUR RAINFALL AND RAINFALL INTENSITY DURATION

APPENDIX B STORMWATER CALCULATIONS FOR NORTH QUARRY SOUTH DRAINAGE AREA

APPENDIX C STORMWATER CALCULATIONS FOR NORTH QUARRY EAST DRAINAGE AREA

APPENDIX D STORMWATER CALCULATIONS FOR NORTH QUARRY WEST DRAINAGE AREA

APPENDIX E STORMWATER CALCULATIONS FOR NORTH QUARRY NORTHWEST DRAINAGE AREA

APPENDIX F STORMWATER CALCULATIONS FOR NORTH QUARRY NORTHEAST DRAINAGE AREA

LIST OF TABLES AND FIGURES

Tables

(1) Summary of North Quarry Unit Stormwater Model Drainage Areas
(2) Stormwater Calculation Results for Proposed South Drainage Area (at North Detention Basin)
(3) Stormwater Calculation Results for Proposed East Drainage Area
(4) Stormwater Calculation Results for Proposed West Drainage Area (at the Southwest Detention Basin)

Figures

1 Drainage Sub-Areas and Storm Water Model Area

1 INTRODUCTION

The stormwater management system for the proposed EVOH geomembrane cap design of the North Quarry Unit of Bridgeton Landfill has been designed based on the stormwater requirements of Missouri Rules of Natural Resources, Division 80 Solid Waste Management Chapter 3 Sanitary Landfill Section 10 CSR 80-3.010 (8) Water Quality (F). This rule requires:

(I) Areas of the watershed which will be affected by the sanitary landfill shall be specified.
(II) On-site drainage structures and channels shall be designed to prevent flow onto the active portion of the sanitary landfill during at least a twenty-five (25) year storm. The engineering calculations and assumptions shall be included and explained in an engineering report.
(III) On-site drainage structures and channels shall be designed to collect and control at least the water volume from a twenty-four (24) hour, twenty-five (25) year storm.
(IV) On-site drainage channels shall be designed to empty expeditiously after storms to maintain the design capacity of the system.
(V) Contingency plans for on-site management of surface water which comes into contact with solid waste shall be specified.

This report provides a summary of the how the stormwater design meets the MDNR rule requirements listed above and includes corresponding supporting design calculations.

The existing conditions of the North Quarry are shown on Sheets 1 and 1A of the Construction Plans for the EVOH Geomembrane Cap and Cap Integrity System of Bridgeton Landfill North Quarry (Cap Engineering Plans). The proposed EVOH geomembrane cap for the North Quarry is comprised of ~~three~~two phases totaling 21 acres as shown in Sheet 2 of the Cap Engineering Plans.

The Bridgeton Landfill has three permitted outfalls (~~001~~007, 006 and 004) on the north side and two permitted outfalls (003 and 005) on the south side. Stormwater for the North Quarry Unit currently drains to outfalls ~~001~~007, 004 and 003 and will continue to outfall at the existing outfalls for the proposed cap design (note: southeast permitted outfall 003 at the southwest is in the process of being relocated to the outlet of the proposed southwest detention basin discharge culvert).

2 STORMWATER MANAGEMENT DESIGN

The EVOH geomembrane cap has been designed to control both stormwater run-on to the landfill and stormwater runoff from the landfill. Due to the elevated topography of the North Quarry, no stormwater run-on to the landfill occurs.

Stormwater runoff from Pphases 1A and 1B 1 of the North Quarry EVOH geomembrane cap area is designed to sheet flow down the landfill slopes to perimeter drainage channels which convey the runoff through culverts to a detention basin before being discharged off-site. Except for the north existing benches of Phase 1B, the benches will be regraded to provide a positive outward slope to facilitate sheet flow. The existing benches on the north side of Pphase 1B 1 will be regraded and used to divert stormwater away from the cutoff trenchisolation break excavation. should the cutoff trench be necessary (as determined by monitoring results of temperature monitoring probes along trigger line 2).

Stormwater management for Pphase 2 will be affected by the final design of the isolation breakbarrier cutoff trench. The isolation breakcutoff trench design shown on the Cap Engineering Plans is a conceptual design and the design will be finalized after the Cap Engineering Plans are completed. Therefore, the stormwater design will be finalized following completion of the isolation breakbarrier cutoff trench design and revisions will be submitted to the MDNR for approval. For the present Pphase 2 design, stormwater runoff from the Pphase 2 area is designed to sheet flow to perimeter channels and then drain to existing drainage channels.

Proposed light-duty access roads which will be constructed above the EVOH Geomembrane cap to serve as ballast against wind uplift have been designed generally in an up/down slope orientation so as to not impede sheet flow runoff. Eyebrow diversion berms will be used where it is necessary to protect features such as extraction wells, valves risers, etc. from stormwater runoff. These may be installed both initially during the EVOH Geomembrane cap construction and during the subsequent operation and maintenance of the facility. Energy dissipaters will be used in specific locations where stormwater flow concentrates to help dissipate the energy of the concentrated flow. The locations of the eyebrow diversion berms and energy dissipaters will be included in the EVOH geomembrane cap certification report which will be submitted to the MDNR following completion of the construction. Locations of the eyebrow diversion berms and energy dissipaters installed following construction of the EVOH geomembrane cap certification report, which will be included in the as-built updates submitted to the MDNR quarterly. Specific stormwater management design details for subareas of the north quarry unit are described in Sections 2.1.1 through 2.1.4 of this report.

Stormwater runoff flow estimates and channel analyses found in this report, unless otherwise indicated, were calculated using HydroCAD version 10 (HydroCAD). This program is an industry standard program utilizing the TR-20 Methodology developed by the Soil Conservation Service. The program develops runoff hydrographs for subareas based on inputs of drainage area, time of concentration and rainfall. For the Bridgeton Landfill area, the recommended type II rainfall distribution with antecedent moisture condition II was used in the analyses. The program was also used to perform both hydrograph routing and design drainage channels, culverts, and detention basins.

Drainage subareas for the north quarry were developed for stormwater design and analyses of channels, culverts and detention basins. The subareas are shown and summarized in Sheet 7 of the Cap Engineering Plans. Separate stormwater models were developed for each discharge location as shown in Figure 1 and summarized in Table 1. Proposed cap areas were analyzed with a runoff curve number of 100 which results in 100 percent of the precipitation generating stormwater runoff.

Peak runoff flows for each sub-area were obtained using HydroCAD for the 25-year, 24-hour storm event. The 25-year 24-hour rainfall for Bridgeton Landfill was obtained from Bulletin 71 (MCC Research Report 92-03), Rainfall Frequency Atlas of the Midwest, 1992. A copy of the figure showing this rainfall frequency information is included in Appendix A of this report. The peak flows are based on stormwater slopes developed using the topographic map dated February 13, 2013 prepared by Coop Aerial Surveyors Company.

Table 1 – Summary of North Quarry Unit Stormwater Model Drainage Areas

NORTH QUARRY CAP AREA	SUBAREAS INCLUDED	TOTAL CAP AREA (ACRES)	DISCHARGE LOCATION
South	N1A-S, N1A-E	4.25	North Detention Basin of South Quarry (to Outfall 004)
East	N1B-N2, N1B-E, N1B-S1, N1B-S2	4.63	Proposed Northeast Detention Basin (to Outfall 004)
West	N1A-W, N1B-W1, N1B-W2, N1B-N1	6.16	Southwest Detention Basin of South Quarry (to Outfall 003)
Northwest	N2-NW1	2.73	Existing Channel (to Outfall 001007)
Northeast	N2-NE1, N2-NE2	3.32	Existing Channel (to Proposed Outfall 001)
Total		21.09	

2.1.1 North Quarry South Drainage Area (Subareas N1A-S, N1A-E)

The south drainage area collects stormwater from subareas N1A-S and N1A-E and conveys it through perimeter channels and culverts to the South Quarry north channel which then drains into the South Quarry north detention basin. The stormwater design features for the North Quarry south drainage area include the following:

1. Proposed perimeter drainage channels N1A-S and N1A-E
2. Proposed culverts C-1 and C-2
3. Impact on the South Quarry north perimeter drainage channel and north detention basin

The proposed perimeter channels proposed culverts C-1 and C-2 and South Quarry north perimeter channel and detention basin are shown on Sheet 7 of the Cap Engineering Plans. Details of the proposed drainage channels and culverts are provided on Sheets 7, 11, and 13 of the Cap Engineering Plans.

Calculations for the south drainage area are provided in Appendix B of this report. The results of the of the 24-hour 25-year stormwater calculations are summarized below and include both the previous results for the South Quarry design and the results with the additional North Quarry subareas. The peak water surface elevation is below the top of the north detention basin (el 480) and the outlet peak flow will increase only slightly with the additional North Quarry cap areas. The inflow and outflow hydrographs for the North Detention Basin which shows the time for the basin to drain are included in Appendix B.

Table 2 – Stormwater Calculation Results for South Drainage Area (at North Detention Basin)

NORTH DETENTION BASIN DESIGN	RESULTS WITH ADDITIONAL NORTH QUARRY SUBAREAS	RESULTS FOR PREVIOUS SOUTH QUARRY DESIGN
Approximate Basin Dimensions	60 feet x 260 feet	60 feet x 260 feet
Basin Volume at Peak Elevation	1.325 acre-feet	0.883 acre-feet
Detention Time	0.22 hours (13 minutes)	0.23 hours (14 minutes)
Peak Inflow (cfs)	65.2 cfs	39.2 cfs
Peak Outflow (cfs)	14.3 cfs	11.8 cfs

Peak Water Surface Elevation	478.79	477.33

2.1.2 North Quarry East Drainage Area (Subareas N1B-N2, N1B-E, N1B-S1 and N1B-S2)

The stormwater design features for the east drainage area include the following:

1. Proposed perimeter drainage channels N1B-N1, N1B-N2, N1B-E, N1B-S1 and N1B-S2
2. Proposed culverts C-4 through C-11
3. Proposed northeast detention basin

The locations of the proposed channels, culverts and northeast detention basin are shown on Sheet 7 of the Cap Engineering Plans. Details of the proposed channels and culverts are provided on Sheets 7, 11 and 13 of the Cap Engineering Plans. Channels N1B-N1, N1B-N2 and N1B-E are designed to collect and divert drainage from the proposed ~~cutoff trench~~isolation break in phase 2 to facilitate construction of the trench excavation and backfill. The location of the cutoff trench is conceptual at present and design will be finalized after submittal of the cap design, therefore channels N1B-N1, N1B-N2 and N1B-E may be revised upon completion of the cutoff trench design.

The proposed perimeter channels, proposed culverts C-4 through C-11 and proposed northeast detention basin are shown on Sheet 7 of the Cap Engineering Plans. Details of the proposed drainage channels and culverts are provided on Sheets 7, 11 and 13 of the Cap Engineering Plans.

Calculations for the east drainage area are provided in Appendix C of this report. The results of the 24-hour 25-year stormwater calculations are summarized below. The peak water surface elevation 482.42 is lower than the top of the basin elevation 484 and the ground elevation at the solid waste boundary el 488; therefore no run-on to the landfill will occur. Outflow from the northeast detention basin will outlet to an existing drainage channel which flows to the hauling company detention basin. The proposed northeast detention basin is effective in reduction of the peak flow from the proposed cap area. The inflow and outflow hydrographs for the proposed Northeast Detention Basin which shows the time for the basin to drain are included in Appendix C.

Table 3 – Stormwater Calculation Results for Proposed East Drainage Area

PROPOSED NORTHEAST DETENTION BASIN DESIGN	RESULTS
Approximate Basin Dimensions	80 feet x 200 feet
Basin Volume at Peak Elevation	1.144 acre-feet

Detention Time	0.21 hours (12 minutes)
Peak Inflow (cfs)	44.8 cfs
Peak Outflow (cfs)	12.8 cfs
Peak Water Surface Elevation	482.42

2.1.3 North Quarry West Drainage Area (Subareas N1A-W, N1B-W1, N1B-W2, N1B-N1)

Stormwater form the North Quarry west drainage area currently drains along the west side of the South Quarry to the southwest detention basin. The stormwater drainage will increase for the proposed North Quarry cap due to the imperviousness of the cap. The stormwater model prepared previously for the southwest drainage basin was modified for the proposed North Quarry west drainage area to design the proposed channels and culvert C-3 and also to evaluate the impacts to the South Quarry drainage system. The locations of the proposed west perimeter channels and culvert C-3 are shown on Sheet 7 of the Cap Engineering Plans. Details of the structures are provided on Sheets 7, 11 and 13 of the Cap Engineering Plans. The location of the southwest detention basin included in the design of the South Quarry cap is shown on Sheet 1 of the Cap Engineering Plans.

Calculations for the North Quarry west drainage area are provided in Appendix D of this report. The results of the 24-hour 25-year stormwater calculations at the southwest detention basin are summarized in Table 45. The inflow and outflow hydrographs for the Southwest Detention Basin which shows the time for the basin to drain is included in Appendix C. The calculations show that the additional drainage from the North Quarry west drainage area will not have a significant effect on the offsite discharge. The results listed for the previous South Quarry design include field changes made during construction of the South Quarry cap which will be included with the certification report for the South Quarry cap.

Table 4 – Stormwater Calculation Results for Proposed West Drainage Area (at the Southwest Detention Basin)

SOUTHWEST DETENTION BASIN DESIGN	RESULTS WITH NORTH QUARRY CAP	RESULTS FOR PREVIOUS SOUTH QUARRY DESIGN
Approximate Basin Dimensions	420 feet x 580 feet (el. 450)	420 feet x 580 feet (el. 450)
Basin Volume at Peak Elevation	15.924 acre-feet	15.263 acre-feet
Detention Time	1.32 hours (79 minutes)	1.32 hours (79 minutes)
Peak Inflow (cfs)	276 cfs	269 cfs
Peak Outflow (cfs)	24 cfs	24 cfs
Peak Water Surface Elevation	444.54	444.45

2.1.4 North Quarry Northwest Drainage Area (Subarea N2-NW1)

The North Quarry northwest drainage area consists of the northwest part of the Pphase 2 cap. The stormwater design for this area consists of a perimeter channel designated as N2-NW1 which is designed to collect runoff from the cap and drain it to the west to a proposed downslope riprap channel N2-NW1 which then discharges to an existing onsite channel near the entrance road to the transfer station.

The subarea N2-NW1 and proposed channels are shown on Sheet 7 of the Cap Engineering Plans and stormwater calculations are provided in Appendix E of this report. The proposed cap would increase the peak flow for the 24-hour 25-year storm from 14 cfs to 24 cfs for this subarea N2-NW1. No area is available for design of a detention basin for this subarea; however, the drainage area is limited to the phase 2 cap. The design of the proposed channels for this subarea will be reevaluated once the isolation barrier cutoff trench design is completed.

2.1.5 North Quarry Northeast Drainage Area (Subarea N2-NE1)

The North Quarry Northeast Drainage Area consists of the northeast part of the Pphase 2 cap. The stormwater design for this area consists of a perimeter channel designated as N2-NE1 which is designed to collect runoff from the cap and drain it to the east to the existing channel on the west side of St Charles Rock Road.

The subarea N2-NE1 and proposed channel is shown on Sheet 7 of the Cap Engineering Plans and stormwater calculations are provided in Appendix F. A significant part of the existing North Quarry which drains to the northeast will be routed to the proposed northeast detention basin which drains to the south. The calculations for the 24-hour 25-year storm under existing conditions result in a peak flow of 30 cfs while under the proposed cap design the peak flow would be 31 cfs. The design of the proposed channels for this subarea will be reevaluated once the isolation barrier cutoff trench design is completed.

3 CONCLUSIONS

Based on the descriptions and calculations included in this engineering report, the proposed stormwater management design for the EVOH geomembrane cap proposed for the North Quarry Unit at the Bridgeton Landfill meet the requirements of Missouri Rules of Natural Resources, Division 80 Solid Waste Management Chapter 3 Sanitary Landfill Section 10 CSR 80-3.010 (8) Water Quality (F) as described below.

(I) Areas of the watershed that will be affected by the sanitary landfill have been specified in Figure 1.

(II) On-site drainage structures and channels have been designed to prevent flow onto the active portion of the sanitary landfill during at least a twenty-five (25) year storm. The engineering calculations and assumptions are included and explained in this engineering report.

(III) On-site drainage structures and channels have been designed to collect and control at least the water volume from a twenty-hour (24) hour, twenty-five (25) year storm. Perimeter channels either exist or are designed to collect the runoff and direct it to detention basins (except subareas N2-NW1 and N2-NE1 and N2-NE2 in the case of a Pphase 2 cap installation) for discharge off-site.

(IV) On-site drainage channels have been designed to empty expeditiously after storms to maintain the design capacity of the system. Hydrographs included with the design calculations show that the conveyance structures including detention basins will drain in less than 24 hours.

Contingency plans for on-site management of storm water which comes into contact with solid waste are available. The proposed stormwater management system includes detention basins for Pphase 1 cap subareas that can be used as contingency measures for on-site management of stormwater water that may come into contact with solid waste including leachate. In addition, if warranted perimeter channels can be lined with a geomembrane to provide additional contingency measures to manage impacted stormwater water and minimize infiltration into the ground around the landfill. Bridgeton Landfill maintains an assortment of equipment on site to address operations and maintenance of the facility. In the event that leachate or gas condensate is detected above the temporary cap, it will be isolated immediately using soil stockpiled onsite and pumped to a storage container for removal as leachate and the temporary cap will be repaired. If leachate or gas condensate is observed in the lined channel or a detention basin, the liquid will be pumped and removed as quickly as possible using high volume pumping equipment and load-out trucks maintained on site to provide this contingency.

LIMITATIONS

The work product included in the attached was undertaken in full conformity with generally accepted professional consulting principles and practices and to the fullest extent as allowed by law we expressly disclaim all warranties, express or implied, including warranties of merchantability or fitness for a particular purpose. The work product was completed in full conformity with the contract with our client and this document is solely for the use and reliance of our client (unless previously agreed upon that a third party could rely on the work product) and any reliance on this work product by an unapproved outside party is at such party's risk.

The work product herein (including opinions, conclusions, suggestions, etc.) was prepared based on the situations and circumstances as found at the time, location, scope and goal of our performance and thus should be relied upon and used by our client recognizing these considerations and limitations. Cornerstone shall not be liable for the consequences of any change in environmental standards, practices, or regulations following the completion of our work and there is no warrant to the veracity of information provided by third parties, or the partial utilization of this work product.

FIGURES

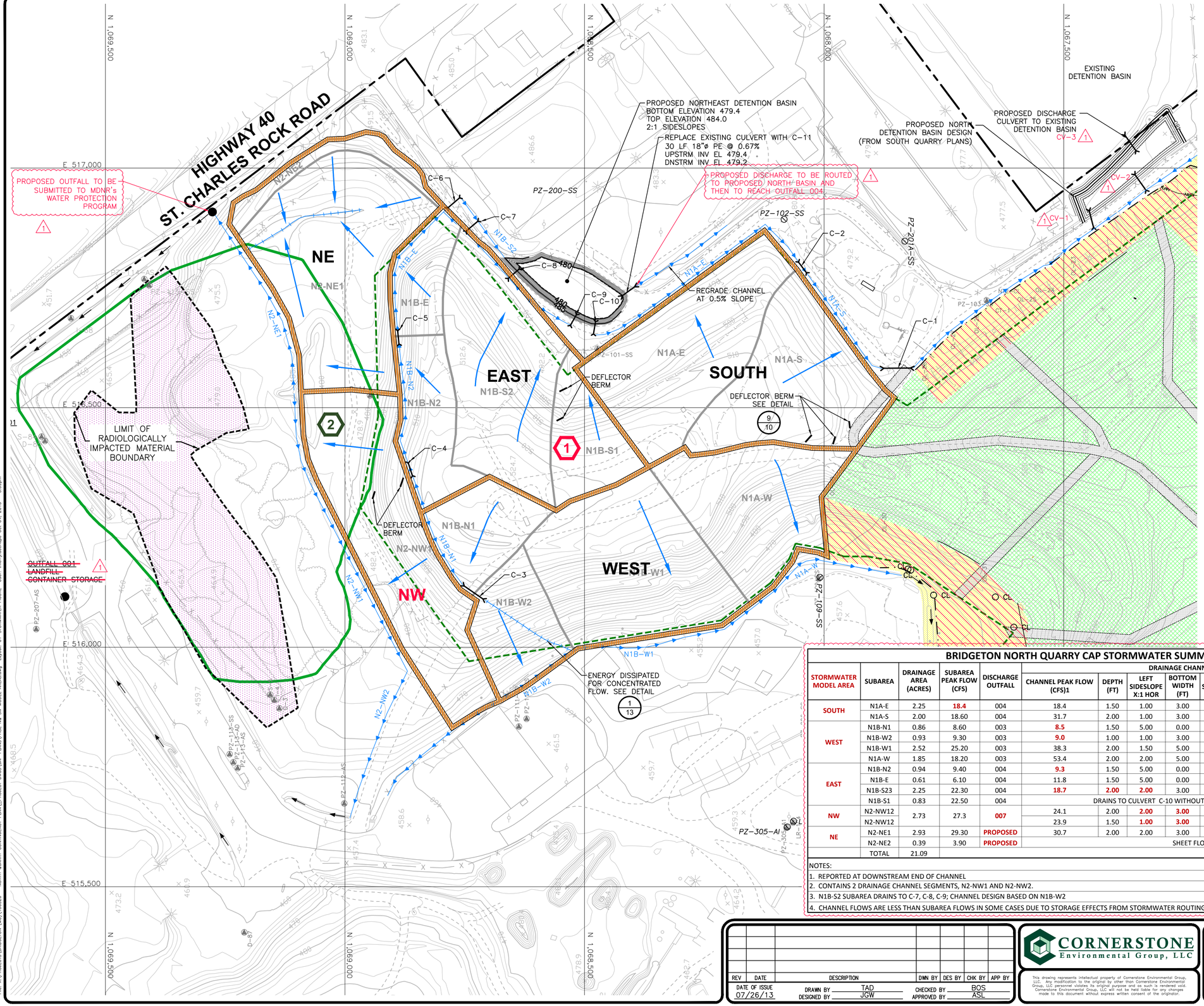

N

0 100 200

SCALE IN FEET

LEGEND

- SOLID WASTE PERMIT 118912 BOUNDARY
- DRAINAGE AREA BOUNDARY
- EXISTING 10' CONTOUR
- EXISTING 2' CONTOUR
- EXISTING HDPE GEOMEMBRANE
- EXISTING HDPE GEOMEMBRANE WITH EVOH LINER OVERCAP (1)
- SOUTH QUARRY EVOH GEOMEMBRANE (UNDER CONSTRUCTION)
- LIGHT-DUTY ACCESS ROADS (UNDER CONSTRUCTION)
- STORMWATER MODEL AREAS BOUNDARY
- N1A-E — DRAINAGE SUB-AREA DESIGNATION
- N1A-E — PROPOSED DRAINAGE CHANNEL
- EXISTING DRAINAGE CHANNEL
- PROPOSED CULVERT (SEE SHEET 13)
- SHEET FLOW DIRECTION ARROW
- OUTFALL 001 (SEE NOTE 2)
- 1 — PROPOSED CAP PHASE DESIGNATION (1)
- SOUTH — STORMWATER MODEL AREA DESIGNATION

NOTES: (1)

1. THE STORMWATER MANAGEMENT PLAN HAS BEEN DESIGNED TO MANAGE RUNOFF FROM THE EVOH GEOMEMBRANE CAP FOR A 24-HOUR, 25-YEAR FREQUENCY STORM EVENT. STORMWATER RUNOFF FROM PHASE 1 WILL BE COLLECTED IN PERIMETER CHANNELS AND DIRECTED TO EITHER THE NORTH OR SOUTH PROPOSED DETENTION BASINS DESIGNED AS PART OF THE SOUTH QUARRY CAP PLANS. STORMWATER RUNOFF FROM PHASE 2 WILL BE COLLECTED IN PERIMETER CHANNELS AND ROUTED TO AN EXISTING DRAINAGE CHANNEL.
2. SEE SHEET 1 FOR LOCATIONS OF PERMITTED OUTFALLS AND SOUTH QUARRY DETENTION BASINS. (1)
3. MANY OF THE ITEMS SHOWN AS UNDER CONSTRUCTION HAVE BEEN COMPLETED AND AS-BUILT DOCUMENTATION WILL BE SUBMITTED SEPARATELY.

BRIDGETON NORTH QUARRY CAP STORMWATER SUMMARY (1)

STORMWATER MODEL AREA	SUBAREA	DRAINAGE AREA (ACRES)	SUBAREA PEAK FLOW (CFS)	DISCHARGE OUTFALL	DRAINAGE CHANNEL DESIGN							
					CHANNEL PEAK FLOW (CFS)1	DEPTH (FT)	LEFT SIDESLOPE X:1 HOR	BOTTOM WIDTH (FT)	RIGHT SIDESLOPE X:1 HOR	CHANNEL SLOPE (%)	CHANNEL VELOCITY (FT/SEC)	CHANNEL LINING
SOUTH	N1A-E	2.25	**18.4**	004	18.4	1.50	1.00	3.00	1.00	0.20	2.78	GRASSED
	N1A-S	2.00	18.60	004	31.7	2.00	1.00	3.00	1.00	0.20	3.28	GRASSED
WEST	N1B-N1	0.86	8.60	003	**8.5**	1.50	5.00	0.00	4.00	6.70	11.0	GEOMEMBRANE
	N1B-W2	0.93	9.30	003	**9.0**	1.00	1.00	3.00	1.00	0.50	2.58	GRASSED
	N1B-W1	2.52	25.20	003	38.3	2.00	1.50	5.00	1.50	0.21	2.63	GRASSED
	N1A-W	1.85	18.20	003	53.4	2.00	2.00	5.00	2.00	0.30	3.15	GRASSED
EAST	N1B-N2	0.94	9.40	004	**9.3**	1.50	5.00	0.00	4.00	**7.80**	11.90	GEOMEMBRANE
	N1B-E	0.61	6.10	004	11.8	1.50	5.00	0.00	4.00	**2.00**	7.60	GEOMEMBRANE
	N1B-S23	2.25	22.30	004	**18.7**	**2.00**	**2.00**	3.00	**2.00**	**1.00**	**3.77**	GRASSED
	N1B-S1	0.83	22.50	004	DRAINS TO CULVERT C-10 WITHOUT CHANNEL							GRASSED
NW	N2-NW12	2.73	27.3	**007**	24.1	2.00	**2.00**	**3.00**	2.00	0.50	**3.14**	GRASSED
	N2-NW12				23.9	1.50	**1.00**	**3.00**	**1.00**	8.00	6.37	GRASSED
NE	N2-NE1	2.93	29.30	**PROPOSED**	30.7	2.00	2.00	3.00	2.00	**0.50**	**3.55**	GRASSED
	N2-NE2	0.39	3.90	**PROPOSED**	SHEET FLOWS							
	TOTAL	21.09										

NOTES:
1. REPORTED AT DOWNSTREAM END OF CHANNEL
2. CONTAINS 2 DRAINAGE CHANNEL SEGMENTS, N2-NW1 AND N2-NW2.
3. N1B-S2 SUBAREA DRAINS TO C-7, C-8, C-9; CHANNEL DESIGN BASED ON N1B-W2
4. CHANNEL FLOWS ARE LESS THAN SUBAREA FLOWS IN SOME CASES DUE TO STORAGE EFFECTS FROM STORMWATER ROUTING

(1)

STATE OF MISSOURI
ADAM S. LEVEN
NOTARY
MEMBER
E-28655
REGISTERED PROFESSIONAL ENGINEER

10/4/13

REV	DATE	DESCRIPTION	DWN BY	DES BY	CHK BY	APP BY

DATE OF ISSUE 07/26/13
DRAWN BY TAD
DESIGNED BY JGW
CHECKED BY BOS
APPROVED BY ASL

CORNERSTONE Environmental Group, LLC

This drawing represents intellectual property of Cornerstone Environmental Group, LLC. Any modification to the original by other than Cornerstone Environmental Group, LLC personnel violates its original purpose and as such is rendered void. Cornerstone Environmental Group, LLC will not be held liable for any changes made to this document without express written consent of the originator.

BRIDGETON LANDFILL, LLC.
BRIDGETON LANDFILL
BRIDGETON, MISSOURI

NORTH QUARRY - EVOH GEOMEMBRANE CAP AND CAP INTEGRITY SYSTEM
DRAINAGE SUB-AREAS AND STORM WATER MODEL AREAS

SHEET NO. 1
PROJECT NO. 130520

File: X:\PROJECTS\BRIDGETON (MO)\130520 - NORTH QUARRY CONTINGENCY PLAN_PROJECT DWGS\CAP PLANS\PHBL N2 SW MODEL AREAS.dwg Layout: 01-STORMWATER FIGURE User: thierry.dechope Oct 04, 2013 - 3:38pm

APPENDIX A

25-YEAR 24-HOUR RAINFALL AND RAINFALL INTENSITY DURATION

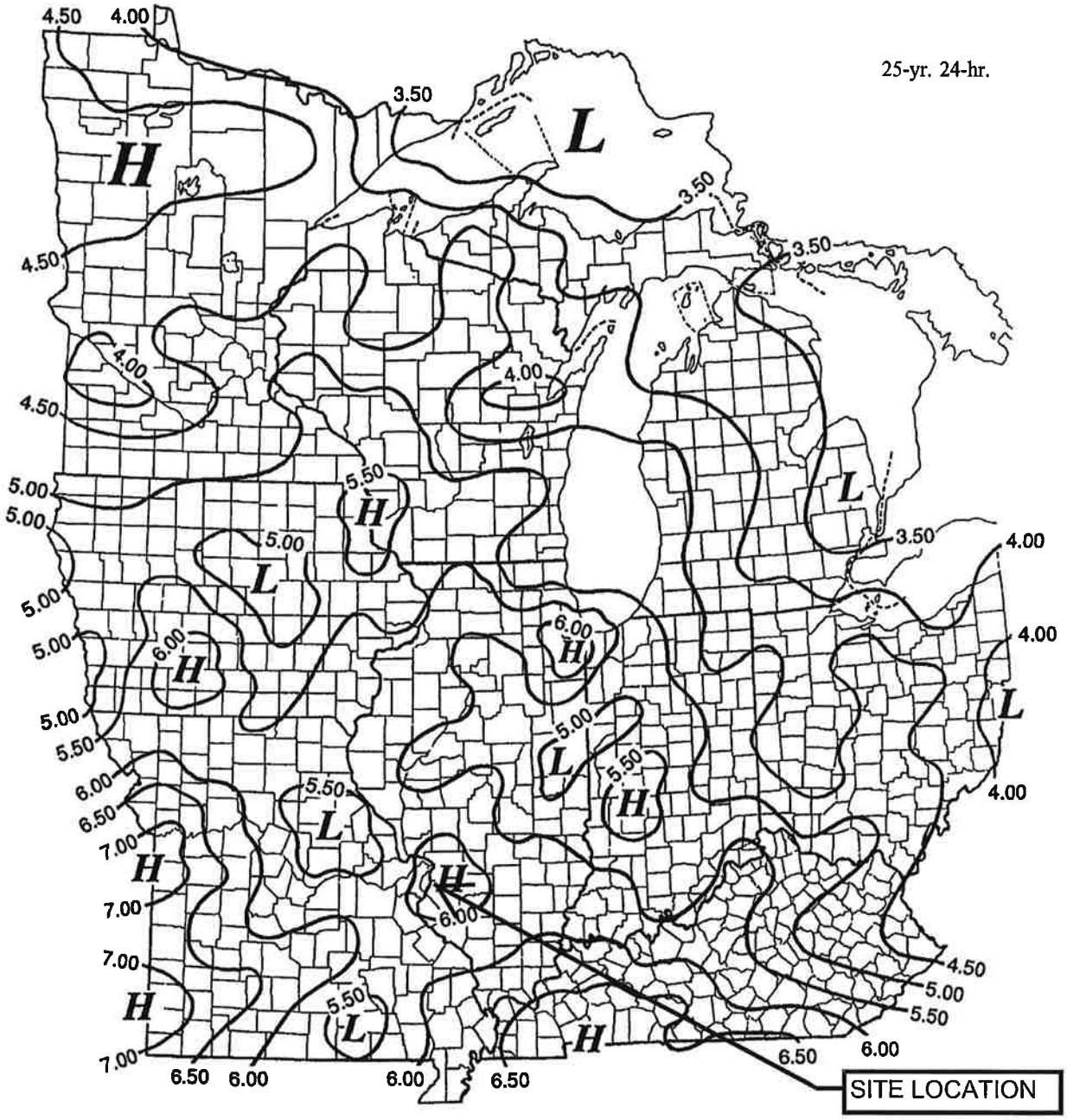

Figure 6. Continued

APPENDIX B

STORMWATER CALCULATIONS FOR NORTH QUARRY SOUTH DRAINAGE AREA

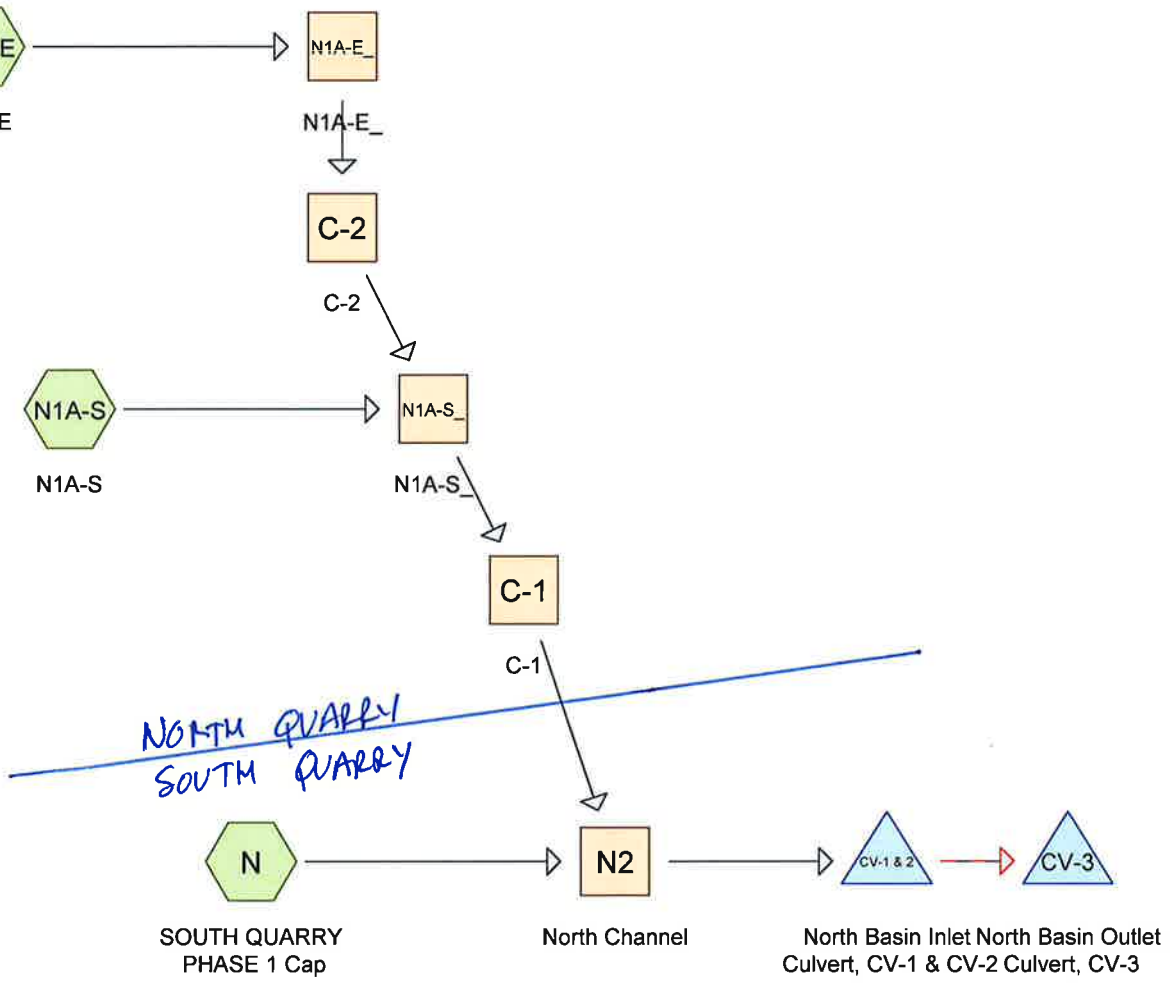

NORTH QUARRY CAP SOUTH STORMWATER MODEL

Subcat Reach Pond Link

Routing Diagram for North Cap Proposed
Prepared by Cornerstone, Printed 7/26/2013
HydroCAD® 10.00 s/n 04282 © 2011 HydroCAD Software Solutions LLC

Area Listing (selected nodes)

Area (acres)	CN	Description (subcatchment-numbers)
8.200	100	(N, N1A-E, N1A-S)
8.200	**100**	**TOTAL AREA**

Pipe Listing (selected nodes)

Line#	Node Number	In-Invert (feet)	Out-Invert (feet)	Length (feet)	Slope (ft/ft)	n	Diam/Width (inches)	Height (inches)	Inside-Fill (inches)
1	C-1	0.00	-1.44	80.0	0.0180	0.012	24.0	0.0	0.0
2	C-2	0.00	-0.18	30.0	0.0060	0.012	24.0	0.0	0.0
3	CV-1 & 2	478.50	473.50	40.0	0.1250	0.012	24.0	0.0	0.0
4	CV-3	473.50	472.00	40.0	0.0375	0.012	18.0	0.0	0.0

Time span=0.00-120.00 hrs, dt=0.01 hrs, 12001 points
Runoff by SCS TR-20 method, UH=SCS
Reach routing by Dyn-Stor-Ind method - Pond routing by Dyn-Stor-Ind method

Subcatchment N: SOUTH QUARRY Runoff Area=3.950 ac 100.00% Impervious Runoff Depth=6.00"
Flow Length=620' Tc=5.1 min CN=100 Runoff=34.89 cfs 1.975 af

Subcatchment N1A-E: N1A-E Runoff Area=2.250 ac 100.00% Impervious Runoff Depth=6.00"
Flow Length=690' Tc=7.6 min CN=100 Runoff=18.37 cfs 1.125 af

Subcatchment N1A-S: N1A-S Runoff Area=2.000 ac 100.00% Impervious Runoff Depth=6.00"
Flow Length=500' Tc=3.4 min CN=100 Runoff=18.62 cfs 1.000 af

Reach C-1: C-1 Avg. Flow Depth=1.58' Max Vel=11.92 fps Inflow=31.68 cfs 2.125 af
24.0" Round Pipe n=0.012 L=80.0' S=0.0180 '/' Capacity=32.88 cfs Outflow=31.68 cfs 2.125 af

Reach C-2: C-2 Avg. Flow Depth=1.48' Max Vel=6.83 fps Inflow=17.02 cfs 1.125 af
24.0" Round Pipe n=0.012 L=30.0' S=0.0060 '/' Capacity=18.98 cfs Outflow=17.01 cfs 1.125 af

Reach N1A-E_: N1A-E_ Avg. Flow Depth=1.39' Max Vel=2.78 fps Inflow=18.37 cfs 1.125 af
n=0.022 L=580.0' S=0.0020 '/' Capacity=19.45 cfs Outflow=17.02 cfs 1.125 af

Reach N1A-S_: N1A-S_ Avg. Flow Depth=1.95' Max Vel=3.28 fps Inflow=32.00 cfs 2.125 af
n=0.022 L=190.0' S=0.0020 '/' Capacity=33.26 cfs Outflow=31.68 cfs 2.125 af

Reach N2: North Channel Avg. Flow Depth=1.75' Max Vel=5.72 fps Inflow=66.43 cfs 4.100 af
n=0.012 L=460.0' S=0.0020 '/' Capacity=86.19 cfs Outflow=65.15 cfs 4.100 af

Pond CV-1 & 2: North Basin Inlet Culvert, Peak Elev=479.58' Storage=412 cf Inflow=65.15 cfs 4.100 af
Primary=4.87 cfs 1.957 af Secondary=60.28 cfs 2.143 af Outflow=65.15 cfs 4.100 af

Pond CV-3: North Basin Outlet Culvert, Peak Elev=478.79' Storage=1.325 af Inflow=65.15 cfs 4.100 af
Primary=14.32 cfs 4.099 af Secondary=0.00 cfs 0.000 af Outflow=14.32 cfs 4.099 af

Total Runoff Area = 8.200 ac Runoff Volume = 4.100 af Average Runoff Depth = 6.00"
0.00% Pervious = 0.000 ac 100.00% Impervious = 8.200 ac

Summary for Subcatchment N: SOUTH QUARRY PHASE 1 Cap

Runoff = 34.89 cfs @ 11.96 hrs, Volume= 1.975 af, Depth= 6.00"

Runoff by SCS TR-20 method, UH=SCS, Time Span= 0.00-120.00 hrs, dt= 0.01 hrs
Type II 24-hr 25 year adj Rainfall=6.00"

	Area (ac)	CN	Description
*	3.950	100	
	3.950		100.00% Impervious Area

Tc (min)	Length (feet)	Slope (ft/ft)	Velocity (ft/sec)	Capacity (cfs)	Description
1.3	300	0.1500	3.74		**Sheet Flow, North** n= 0.012 P2= 3.50"
3.8	320	0.0200	1.41		**Shallow Concentrated Flow, Concentrated Channel Flow** Nearly Bare & Untilled Kv= 10.0 fps
5.1	620	Total			

Summary for Subcatchment N1A-E: N1A-E

Runoff = 18.37 cfs @ 11.98 hrs, Volume= 1.125 af, Depth= 6.00"

Runoff by SCS TR-20 method, UH=SCS, Time Span= 0.00-120.00 hrs, dt= 0.01 hrs
Type II 24-hr 25 year adj Rainfall=6.00"

	Area (ac)	CN	Description
*	2.250	100	
	2.250		100.00% Impervious Area

Tc (min)	Length (feet)	Slope (ft/ft)	Velocity (ft/sec)	Capacity (cfs)	Description
0.9	110	0.0545	2.04		**Sheet Flow,** n= 0.012 P2= 3.50"
6.7	580	0.0050	1.44		**Shallow Concentrated Flow,** Paved Kv= 20.3 fps
7.6	690	Total			

Summary for Subcatchment N1A-S: N1A-S

Runoff = 18.62 cfs @ 11.94 hrs, Volume= 1.000 af, Depth= 6.00"

Runoff by SCS TR-20 method, UH=SCS, Time Span= 0.00-120.00 hrs, dt= 0.01 hrs
Type II 24-hr 25 year adj Rainfall=6.00"

	Area (ac)	CN	Description
*	2.000	100	
	2.000		100.00% Impervious Area

Tc (min)	Length (feet)	Slope (ft/ft)	Velocity (ft/sec)	Capacity (cfs)	Description
2.1	300	0.0500	2.41		**Sheet Flow,** n= 0.012 P2= 3.50"
0.3	115	0.1040	6.55		**Shallow Concentrated Flow,** Paved Kv= 20.3 fps
1.0	85	0.0050	1.44		**Shallow Concentrated Flow,** Paved Kv= 20.3 fps
3.4	500	Total			

Summary for Reach C-1: C-1

Inflow Area = 4.250 ac,100.00% Impervious, Inflow Depth = 6.00" for 25 year adj event
Inflow = 31.68 cfs @ 11.97 hrs, Volume= 2.125 af
Outflow = 31.68 cfs @ 11.97 hrs, Volume= 2.125 af, Atten= 0%, Lag= 0.1 min

Routing by Dyn-Stor-Ind method, Time Span= 0.00-120.00 hrs, dt= 0.01 hrs
Max. Velocity= 11.92 fps, Min. Travel Time= 0.1 min
Avg. Velocity = 3.56 fps, Avg. Travel Time= 0.4 min

Peak Storage= 213 cf @ 11.97 hrs
Average Depth at Peak Storage= 1.58'
Bank-Full Depth= 2.00' Flow Area= 3.1 sf, Capacity= 32.88 cfs

24.0" Round Pipe
n= 0.012
Length= 80.0' Slope= 0.0180 '/'
Inlet Invert= 0.00', Outlet Invert= -1.44'

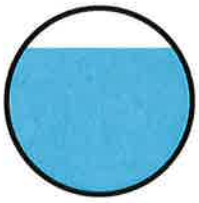

Summary for Reach C-2: C-2

Inflow Area = 2.250 ac,100.00% Impervious, Inflow Depth = 6.00" for 25 year adj event
Inflow = 17.02 cfs @ 12.02 hrs, Volume= 1.125 af
Outflow = 17.01 cfs @ 12.02 hrs, Volume= 1.125 af, Atten= 0%, Lag= 0.1 min

Routing by Dyn-Stor-Ind method, Time Span= 0.00-120.00 hrs, dt= 0.01 hrs
Max. Velocity= 6.83 fps, Min. Travel Time= 0.1 min
Avg. Velocity = 2.00 fps, Avg. Travel Time= 0.3 min

Peak Storage= 75 cf @ 12.02 hrs
Average Depth at Peak Storage= 1.48'
Bank-Full Depth= 2.00' Flow Area= 3.1 sf, Capacity= 18.98 cfs

24.0" Round Pipe
n= 0.012
Length= 30.0' Slope= 0.0060 '/'
Inlet Invert= 0.00', Outlet Invert= -0.18'

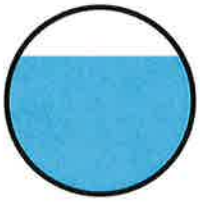

Summary for Reach N1A-E_: N1A-E_

Inflow Area = 2.250 ac,100.00% Impervious, Inflow Depth = 6.00" for 25 year adj event
Inflow = 18.37 cfs @ 11.98 hrs, Volume= 1.125 af
Outflow = 17.02 cfs @ 12.02 hrs, Volume= 1.125 af, Atten= 7%, Lag= 2.0 min

Routing by Dyn-Stor-Ind method, Time Span= 0.00-120.00 hrs, dt= 0.01 hrs
Max. Velocity= 2.78 fps, Min. Travel Time= 3.5 min
Avg. Velocity = 0.65 fps, Avg. Travel Time= 14.8 min

Peak Storage= 3,552 cf @ 12.02 hrs
Average Depth at Peak Storage= 1.39'
Bank-Full Depth= 1.50' Flow Area= 6.8 sf, Capacity= 19.45 cfs

3.00' x 1.50' deep channel, n= 0.022 Earth, clean & straight
Side Slope Z-value= 1.0 '/' Top Width= 6.00'
Length= 580.0' Slope= 0.0020 '/'
Inlet Invert= 0.00', Outlet Invert= -1.16'

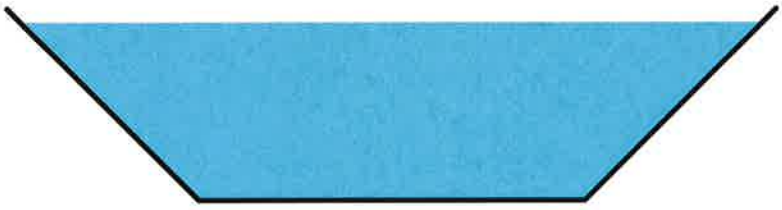

Summary for Reach N1A-S_: N1A-S_

Inflow Area = 4.250 ac,100.00% Impervious, Inflow Depth = 6.00" for 25 year adj event
Inflow = 32.00 cfs @ 11.95 hrs, Volume= 2.125 af
Outflow = 31.68 cfs @ 11.97 hrs, Volume= 2.125 af, Atten= 1%, Lag= 0.7 min

Routing by Dyn-Stor-Ind method, Time Span= 0.00-120.00 hrs, dt= 0.01 hrs
Max. Velocity= 3.28 fps, Min. Travel Time= 1.0 min
Avg. Velocity = 0.82 fps, Avg. Travel Time= 3.9 min

Peak Storage= 1,833 cf @ 11.97 hrs
Average Depth at Peak Storage= 1.95'
Bank-Full Depth= 2.00' Flow Area= 10.0 sf, Capacity= 33.26 cfs

3.00' x 2.00' deep channel, n= 0.022 Earth, clean & straight
Side Slope Z-value= 1.0 '/' Top Width= 7.00'
Length= 190.0' Slope= 0.0020 '/'
Inlet Invert= 0.00', Outlet Invert= -0.38'



Summary for Reach N2: North Channel

Inflow Area = 8.200 ac,100.00% Impervious, Inflow Depth = 6.00" for 25 year adj event
Inflow = 66.43 cfs @ 11.96 hrs, Volume= 4.100 af
Outflow = 65.15 cfs @ 11.98 hrs, Volume= 4.100 af, Atten= 2%, Lag= 0.9 min

Routing by Dyn-Stor-Ind method, Time Span= 0.00-120.00 hrs, dt= 0.01 hrs
Max. Velocity= 5.72 fps, Min. Travel Time= 1.3 min
Avg. Velocity = 1.47 fps, Avg. Travel Time= 5.2 min

Peak Storage= 5,235 cf @ 11.98 hrs
Average Depth at Peak Storage= 1.75'
Bank-Full Depth= 2.00' Flow Area= 14.0 sf, Capacity= 86.19 cfs

3.00' x 2.00' deep channel, n= 0.012
Side Slope Z-value= 2.0 '/' Top Width= 11.00'
Length= 460.0' Slope= 0.0020 '/'
Inlet Invert= 479.42', Outlet Invert= 478.50'

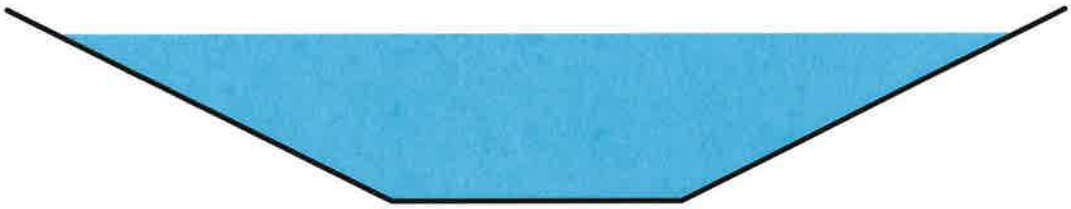

Summary for Pond CV-1 & 2: North Basin Inlet Culvert, CV-1 & CV-2

Inflow Area = 8.200 ac,100.00% Impervious, Inflow Depth = 6.00" for 25 year adj event
Inflow = 65.15 cfs @ 11.98 hrs, Volume= 4.100 af
Outflow = 65.15 cfs @ 11.98 hrs, Volume= 4.100 af, Atten= 0%, Lag= 0.1 min
Primary = 4.87 cfs @ 11.98 hrs, Volume= 1.957 af
Secondary = 60.28 cfs @ 11.98 hrs, Volume= 2.143 af

Routing by Dyn-Stor-Ind method, Time Span= 0.00-120.00 hrs, dt= 0.01 hrs
Peak Elev= 479.58' @ 11.98 hrs Surf.Area= 0 sf Storage= 412 cf

Plug-Flow detention time= 0.6 min calculated for 4.100 af (100% of inflow)

Center-of-Mass det. time= 0.4 min (727.8 - 727.3)

Volume	Invert	Avail.Storage	Storage Description
#1	478.50'	4,828 cf	**Custom Stage Data** Listed below

Elevation (feet)	Inc.Store (cubic-feet)	Cum.Store (cubic-feet)
478.50	0	0
478.70	8	8
479.10	68	76
479.70	416	492
480.50	1,568	2,060
481.00	2,768	4,828

Device	Routing	Invert	Outlet Devices
#1	Primary	478.50'	**24.0" Round Culvert** L= 40.0' Ke= 0.900 Inlet / Outlet Invert= 478.50' / 473.50' S= 0.1250 '/' Cc= 0.900 n= 0.012, Flow Area= 3.14 sf
#2	Secondary	479.00'	**50.0' long x 20.0' breadth Broad-Crested Rectangular Weir** Head (feet) 0.20 0.40 0.60 0.80 1.00 1.20 1.40 1.60 Coef. (English) 2.68 2.70 2.70 2.64 2.63 2.64 2.64 2.63

Primary OutFlow Max=4.86 cfs @ 11.98 hrs HW=479.58' TW=477.43' (Dynamic Tailwater)
↑—**1=Culvert** (Inlet Controls 4.86 cfs @ 2.80 fps)

Secondary OutFlow Max=60.19 cfs @ 11.98 hrs HW=479.58' TW=477.43' (Dynamic Tailwater)
↑—**2=Broad-Crested Rectangular Weir** (Weir Controls 60.19 cfs @ 2.06 fps)

Summary for Pond CV-3: North Basin Outlet Culvert, CV-3

Inflow Area = 8.200 ac,100.00% Impervious, Inflow Depth = 6.00" for 25 year adj event
Inflow = 65.15 cfs @ 11.98 hrs, Volume= 4.100 af
Outflow = 14.32 cfs @ 12.20 hrs, Volume= 4.099 af, Atten= 78%, Lag= 13.5 min
Primary = 14.32 cfs @ 12.20 hrs, Volume= 4.099 af
Secondary = 0.00 cfs @ 0.00 hrs, Volume= 0.000 af

Routing by Dyn-Stor-Ind method, Time Span= 0.00-120.00 hrs, dt= 0.01 hrs
Peak Elev= 478.79' @ 12.20 hrs Surf.Area= 0.324 ac Storage= 1.325 af

Plug-Flow detention time= 61.5 min calculated for 4.099 af (100% of inflow)
Center-of-Mass det. time= 61.7 min (789.5 - 727.8)

Volume	Invert	Avail.Storage	Storage Description
#1	473.50'	1.738 af	**Custom Stage Data (Prismatic)** Listed below (Recalc)

Elevation (feet)	Surf.Area (acres)	Inc.Store (acre-feet)	Cum.Store (acre-feet)
473.50	0.180	0.000	0.000
474.00	0.193	0.093	0.093
476.00	0.245	0.438	0.531
478.00	0.301	0.546	1.077
480.00	0.360	0.661	1.738

Device	Routing	Invert	Outlet Devices
#1	Primary	473.50'	**18.0" Round Culvert** L= 40.0' Ke= 0.900 Inlet / Outlet Invert= 473.50' / 472.00' S= 0.0375 '/' Cc= 0.900 n= 0.012 Corrugated PE, smooth interior, Flow Area= 1.77 sf
#2	Secondary	479.00'	**20.0' long x 5.0' breadth Broad-Crested Rectangular Weir** Head (feet) 0.20 0.40 0.60 0.80 1.00 1.20 1.40 1.60 1.80 2.00 2.50 3.00 3.50 4.00 4.50 5.00 5.50 Coef. (English) 2.34 2.50 2.70 2.68 2.68 2.66 2.65 2.65 2.65 2.65 2.67 2.66 2.68 2.70 2.74 2.79 2.88

Primary OutFlow Max=14.32 cfs @ 12.20 hrs HW=478.79' (Free Discharge)
↑—**1=Culvert** (Inlet Controls 14.32 cfs @ 8.10 fps)

Secondary OutFlow Max=0.00 cfs @ 0.00 hrs HW=473.50' (Free Discharge)
↑—**2=Broad-Crested Rectangular Weir** (Controls 0.00 cfs)

Pond CV-2: North Basin Outlet Culvert, CV-3

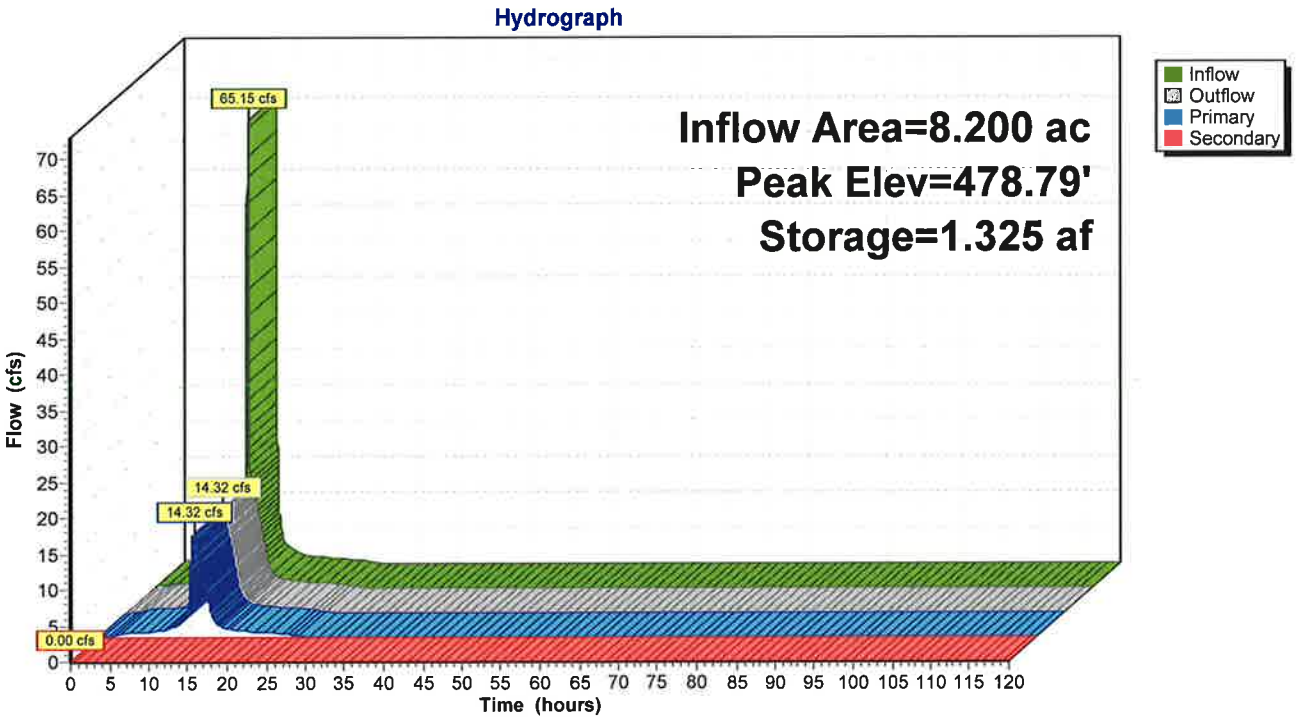

Hydrograph for Pond CV-2: North Basin Outlet Culvert, CV-3

Time (hours)	Inflow (cfs)	Storage (acre-feet)	Elevation (feet)	Outflow (cfs)	Primary (cfs)	Secondary (cfs)
0.00	0.00	0.000	473.50	0.00	0.00	**0.00**
5.00	0.77	0.078	473.92	0.71	0.71	0.00
10.00	**1.85**	**0.123**	**474.15**	**1.60**	**1.60**	0.00
15.00	**1.55**	**0.151**	**474.30**	**2.28**	**2.28**	0.00
20.00	0.67	0.081	473.94	0.76	0.76	0.00
25.00	0.02	0.047	473.76	0.27	0.27	0.00
30.00	0.00	0.014	473.58	0.02	0.02	0.00
35.00	0.00	0.008	473.54	0.01	0.01	0.00
40.00	0.00	0.005	473.53	0.00	0.00	0.00
45.00	0.00	0.004	473.52	0.00	0.00	0.00
50.00	0.00	0.003	473.52	0.00	0.00	0.00
55.00	0.00	0.003	473.52	0.00	0.00	0.00
60.00	0.00	0.002	473.51	0.00	0.00	0.00
65.00	0.00	0.002	473.51	0.00	0.00	0.00
70.00	0.00	0.002	473.51	0.00	0.00	0.00
75.00	0.00	0.002	473.51	0.00	0.00	0.00
80.00	0.00	0.002	473.51	0.00	0.00	0.00
85.00	0.00	0.001	473.51	0.00	0.00	0.00
90.00	0.00	0.001	473.51	0.00	0.00	0.00
95.00	0.00	0.001	473.51	0.00	0.00	0.00
100.00	0.00	0.001	473.51	0.00	0.00	0.00
105.00	0.00	0.001	473.51	0.00	0.00	0.00
110.00	0.00	0.001	473.51	0.00	0.00	0.00
115.00	0.00	0.001	473.51	0.00	0.00	0.00
120.00	0.00	0.001	473.51	0.00	0.00	0.00

APPENDIX C

STORMWATER CALCULATIONS FOR NORTH QUARRY EAST DRAINAGE AREA

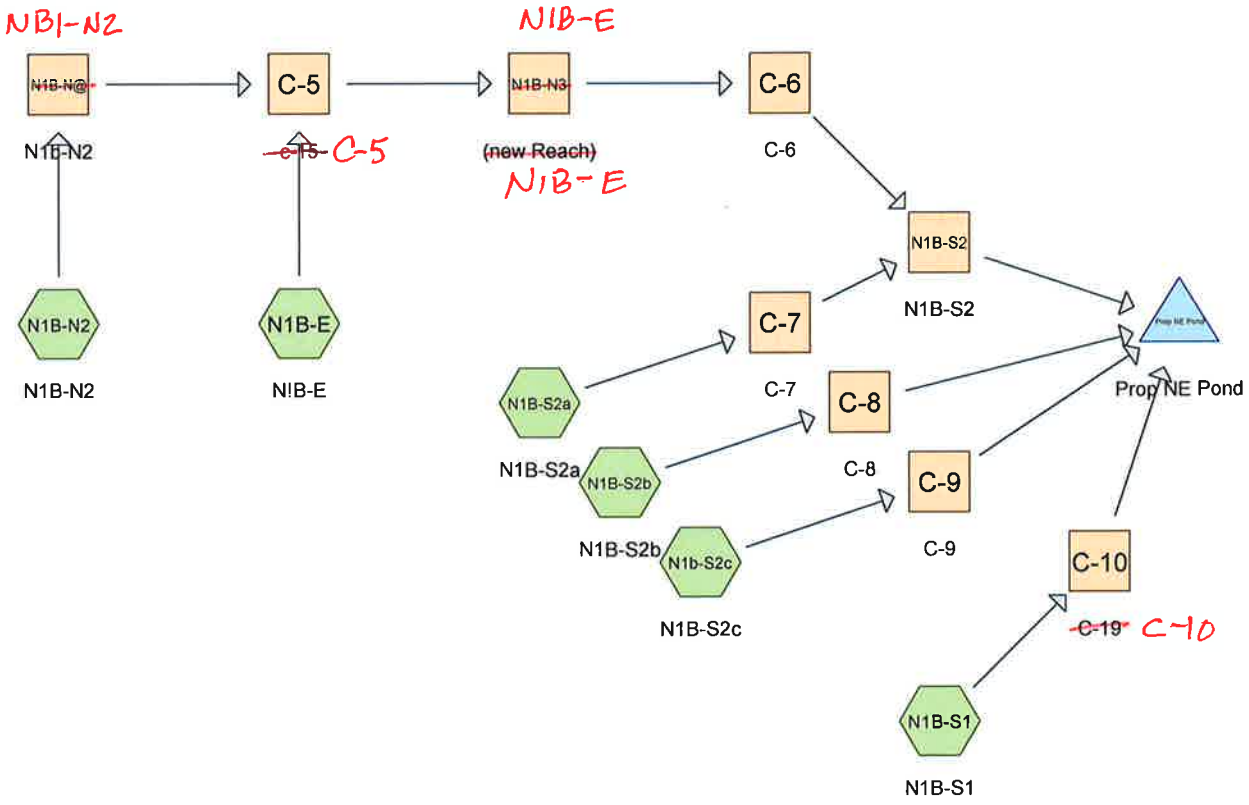

NORTH QUARRY CAP EAST STORMWATER MODEL

Subcat Reach Pond Link

Routing Diagram for North Quarry Cap Proposed
Prepared by Cornerstone, Printed 10/1/2013
HydroCAD® 10.00 s/n 04282 © 2011 HydroCAD Software Solutions LLC

Area Listing (all nodes)

Area (acres)	CN	Description (subcatchment-numbers)
6.029	100	(N1B-E, N1B-N2, N1B-S1, N1B-S2a, N1B-S2b, N1b-S2c)
6.029	**100**	**TOTAL AREA**

Soil Listing (all nodes)

Area (acres)	Soil Group	Subcatchment Numbers
0.000	HSG A	
0.000	HSG B	
0.000	HSG C	
0.000	HSG D	
6.029	Other	N1B-E, N1B-N2, N1B-S1, N1B-S2a, N1B-S2b, N1b-S2c
6.029		**TOTAL AREA**

Ground Covers (all nodes)

HSG-A (acres)	HSG-B (acres)	HSG-C (acres)	HSG-D (acres)	Other (acres)	Total (acres)	Ground Cover	Subcatchment Numbers
0.000	0.000	0.000	0.000	6.029	6.029		N1B-E, N1B-N2, N1B-S1, N1B-S2a, N1B-S2b, N1b-S2c
0.000	**0.000**	**0.000**	**0.000**	**6.029**	**6.029**	**TOTAL AREA**	

Pipe Listing (all nodes)

Line#	Node Number	In-Invert (feet)	Out-Invert (feet)	Length (feet)	Slope (ft/ft)	n	Diam/Width (inches)	Height (inches)	Inside-Fill (inches)
1	C-10	0.00	-0.30	30.0	0.0100	0.012	18.0	0.0	0.0
2	C-5	0.00	-0.30	30.0	0.0100	0.012	18.0	0.0	0.0
3	C-6	0.00	-0.30	30.0	0.0100	0.012	18.0	0.0	0.0
4	C-7	0.00	-0.30	30.0	0.0100	0.012	18.0	0.0	0.0
5	C-8	0.00	-0.30	30.0	0.0100	0.012	18.0	0.0	0.0
6	C-9	0.00	-0.30	30.0	0.0100	0.012	18.0	0.0	0.0
7	Prop NE Pond	479.40	479.20	30.0	0.0067	0.012	18.0	0.0	0.0

Time span=0.00-120.00 hrs, dt=0.01 hrs, 12001 points
Runoff by SCS TR-20 method, UH=SCS
Reach routing by Dyn-Stor-Ind method - Pond routing by Dyn-Stor-Ind method

Subcatchment N1B-E: ~~N1B-E~~ N1B-E
Runoff Area=0.610 ac 100.00% Impervious Runoff Depth=6.00"
Tc=1.0 min CN=100 Runoff=6.09 cfs 0.305 af

Subcatchment N1B-N2: N1B-N2
Runoff Area=0.940 ac 100.00% Impervious Runoff Depth=6.00"
Tc=1.0 min CN=100 Runoff=9.39 cfs 0.470 af

Subcatchment N1B-S1: N1B-S1
Runoff Area=2.250 ac 100.00% Impervious Runoff Depth=6.00"
Tc=1.0 min CN=100 Runoff=22.47 cfs 1.125 af

Subcatchment N1B-S2a: N1B-S2a
Runoff Area=0.743 ac 100.00% Impervious Runoff Depth=6.00"
Tc=1.0 min CN=100 Runoff=7.42 cfs 0.372 af

Subcatchment N1B-S2b: N1B-S2b
Runoff Area=0.743 ac 100.00% Impervious Runoff Depth=6.00"
Tc=1.0 min CN=100 Runoff=7.42 cfs 0.372 af

Subcatchment N1b-S2c: N1B-S2c
Runoff Area=0.743 ac 100.00% Impervious Runoff Depth=6.00"
Tc=1.0 min CN=100 Runoff=7.42 cfs 0.372 af

C-10
Reach C-10: ~~C-19~~
Avg. Flow Depth=1.50' Max Vel=7.33 fps Inflow=22.47 cfs 1.125 af
18.0" Round Pipe n=0.012 L=30.0' S=0.0100 '/' Capacity=11.38 cfs Outflow=11.80 cfs 1.125 af

Reach C-5: c-15
Avg. Flow Depth=1.50' Max Vel=7.33 fps Inflow=15.31 cfs 0.775 af
18.0" Round Pipe n=0.012 L=30.0' S=0.0100 '/' Capacity=11.38 cfs Outflow=12.16 cfs 0.775 af

Reach C-6: C-6
Avg. Flow Depth=1.28' Max Vel=7.34 fps Inflow=11.76 cfs 0.775 af
18.0" Round Pipe n=0.012 L=30.0' S=0.0100 '/' Capacity=11.38 cfs Outflow=11.77 cfs 0.775 af

Reach C-7: C-7
Avg. Flow Depth=0.88' Max Vel=6.86 fps Inflow=7.42 cfs 0.372 af
18.0" Round Pipe n=0.012 L=30.0' S=0.0100 '/' Capacity=11.38 cfs Outflow=7.40 cfs 0.372 af

Reach C-8: C-8
Avg. Flow Depth=0.88' Max Vel=6.86 fps Inflow=7.42 cfs 0.372 af
18.0" Round Pipe n=0.012 L=30.0' S=0.0100 '/' Capacity=11.38 cfs Outflow=7.40 cfs 0.372 af

Reach C-9: C-9
Avg. Flow Depth=0.88' Max Vel=6.86 fps Inflow=7.42 cfs 0.372 af
18.0" Round Pipe n=0.012 L=30.0' S=0.0100 '/' Capacity=11.38 cfs Outflow=7.40 cfs 0.372 af

N1B-E N1B-E
Reach ~~N1B-N3~~: (new Reach)
Avg. Flow Depth=0.59' Max Vel=7.60 fps Inflow=12.16 cfs 0.775 af
n=0.012 L=300.0' S=0.0200 '/' Capacity=144.01 cfs Outflow=11.76 cfs 0.775 af

N1B-N2
Reach ~~N1B-N@~~: N1b-N2
Avg. Flow Depth=0.42' Max Vel=11.93 fps Inflow=9.39 cfs 0.470 af
n=0.012 L=360.0' S=0.0780 '/' Capacity=284.40 cfs Outflow=9.28 cfs 0.470 af

Reach N1B-S2: N1B-S2
Avg. Flow Depth=0.99' Max Vel=3.77 fps Inflow=18.78 cfs 1.147 af
n=0.030 L=150.0' S=0.0100 '/' Capacity=77.09 cfs Outflow=18.69 cfs 1.146 af

Pond Prop NE Pond: Prop NE Pond
Peak Elev=482.42' Storage=1.144 af Inflow=44.80 cfs 3.014 af
18.0" Round Culvert n=0.012 L=30.0' S=0.0067 '/' Outflow=12.82 cfs 2.991 af

Total Runoff Area = 6.029 ac Runoff Volume = 3.015 af Average Runoff Depth = 6.00"
0.00% Pervious = 0.000 ac 100.00% Impervious = 6.029 ac

Summary for Subcatchment N1B-E: ~~N1B-E~~ N1B-E

[49] Hint: Tc<2dt may require smaller dt

Runoff = 6.09 cfs @ 11.91 hrs, Volume= 0.305 af, Depth= 6.00"

Runoff by SCS TR-20 method, UH=SCS, Time Span= 0.00-120.00 hrs, dt= 0.01 hrs
Type II 24-hr 25 year adj Rainfall=6.00"

	Area (ac)	CN	Description
*	0.610	100	
	0.610		100.00% Impervious Area

Tc (min)	Length (feet)	Slope (ft/ft)	Velocity (ft/sec)	Capacity (cfs)	Description
1.0					**Direct Entry,**

Summary for Subcatchment N1B-N2: N1B-N2

[49] Hint: Tc<2dt may require smaller dt

Runoff = 9.39 cfs @ 11.91 hrs, Volume= 0.470 af, Depth= 6.00"

Runoff by SCS TR-20 method, UH=SCS, Time Span= 0.00-120.00 hrs, dt= 0.01 hrs
Type II 24-hr 25 year adj Rainfall=6.00"

	Area (ac)	CN	Description
*	0.940	100	
	0.940		100.00% Impervious Area

Tc (min)	Length (feet)	Slope (ft/ft)	Velocity (ft/sec)	Capacity (cfs)	Description
1.0					**Direct Entry,**

Summary for Subcatchment N1B-S1: N1B-S1

[49] Hint: Tc<2dt may require smaller dt

Runoff = 22.47 cfs @ 11.91 hrs, Volume= 1.125 af, Depth= 6.00"

Runoff by SCS TR-20 method, UH=SCS, Time Span= 0.00-120.00 hrs, dt= 0.01 hrs
Type II 24-hr 25 year adj Rainfall=6.00"

	Area (ac)	CN	Description
*	2.250	100	
	2.250		100.00% Impervious Area

Tc (min)	Length (feet)	Slope (ft/ft)	Velocity (ft/sec)	Capacity (cfs)	Description
1.0					**Direct Entry,**

Summary for Subcatchment N1B-S2a: N1B-S2a

[49] Hint: Tc<2dt may require smaller dt

Runoff = 7.42 cfs @ 11.91 hrs, Volume= 0.372 af, Depth= 6.00"

Runoff by SCS TR-20 method, UH=SCS, Time Span= 0.00-120.00 hrs, dt= 0.01 hrs
Type II 24-hr 25 year adj Rainfall=6.00"

	Area (ac)	CN	Description
*	0.743	100	
	0.743		100.00% Impervious Area

Tc (min)	Length (feet)	Slope (ft/ft)	Velocity (ft/sec)	Capacity (cfs)	Description
1.0					**Direct Entry,**

Summary for Subcatchment N1B-S2b: N1B-S2b

[49] Hint: Tc<2dt may require smaller dt

Runoff = 7.42 cfs @ 11.91 hrs, Volume= 0.372 af, Depth= 6.00"

Runoff by SCS TR-20 method, UH=SCS, Time Span= 0.00-120.00 hrs, dt= 0.01 hrs
Type II 24-hr 25 year adj Rainfall=6.00"

	Area (ac)	CN	Description
*	0.743	100	
	0.743		100.00% Impervious Area

Tc (min)	Length (feet)	Slope (ft/ft)	Velocity (ft/sec)	Capacity (cfs)	Description
1.0					**Direct Entry,**

Summary for Subcatchment N1b-S2c: N1B-S2c

[49] Hint: Tc<2dt may require smaller dt

Runoff = 7.42 cfs @ 11.91 hrs, Volume= 0.372 af, Depth= 6.00"

Runoff by SCS TR-20 method, UH=SCS, Time Span= 0.00-120.00 hrs, dt= 0.01 hrs
Type II 24-hr 25 year adj Rainfall=6.00"

	Area (ac)	CN	Description
*	0.743	100	
	0.743		100.00% Impervious Area

Tc (min)	Length (feet)	Slope (ft/ft)	Velocity (ft/sec)	Capacity (cfs)	Description
1.0					**Direct Entry,**

Summary for Reach C-10: ~~C-19~~ C-10

[52] Hint: Inlet/Outlet conditions not evaluated
[65] Warning: Inlet elevation not specified
[55] Hint: Peak inflow is 197% of Manning's capacity
[76] Warning: Detained 0.091 af (Pond w/culvert advised)

Inflow Area = 2.250 ac,100.00% Impervious, Inflow Depth = 6.00" for 25 year adj event
Inflow = 22.47 cfs @ 11.91 hrs, Volume= 1.125 af
Outflow = 11.80 cfs @ 11.79 hrs, Volume= 1.125 af, Atten= 47%, Lag= 0.0 min

Routing by Dyn-Stor-Ind method, Time Span= 0.00-120.00 hrs, dt= 0.01 hrs
Max. Velocity= 7.33 fps, Min. Travel Time= 0.1 min
Avg. Velocity = 2.84 fps, Avg. Travel Time= 0.2 min

Peak Storage= 53 cf @ 11.80 hrs
Average Depth at Peak Storage= 1.50'
Bank-Full Depth= 1.50' Flow Area= 1.8 sf, Capacity= 11.38 cfs

18.0" Round Pipe
n= 0.012
Length= 30.0' Slope= 0.0100 '/'
Inlet Invert= 0.00', Outlet Invert= -0.30'

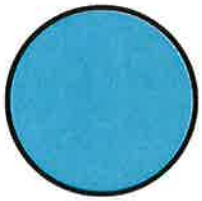

Summary for Reach C-5: ~~C-15~~ C-5

[52] Hint: Inlet/Outlet conditions not evaluated
[65] Warning: Inlet elevation not specified
[55] Hint: Peak inflow is 135% of Manning's capacity
[76] Warning: Detained 0.018 af (Pond w/culvert advised)

Inflow Area = 1.550 ac,100.00% Impervious, Inflow Depth = 6.00" for 25 year adj event
Inflow = 15.31 cfs @ 11.91 hrs, Volume= 0.775 af
Outflow = 12.16 cfs @ 11.86 hrs, Volume= 0.775 af, Atten= 21%, Lag= 0.0 min

Routing by Dyn-Stor-Ind method, Time Span= 0.00-120.00 hrs, dt= 0.01 hrs
Max. Velocity= 7.33 fps, Min. Travel Time= 0.1 min
Avg. Velocity = 2.52 fps, Avg. Travel Time= 0.2 min

Peak Storage= 53 cf @ 11.87 hrs
Average Depth at Peak Storage= 1.50'
Bank-Full Depth= 1.50' Flow Area= 1.8 sf, Capacity= 11.38 cfs

18.0" Round Pipe
n= 0.012
Length= 30.0' Slope= 0.0100 '/'
Inlet Invert= 0.00', Outlet Invert= -0.30'

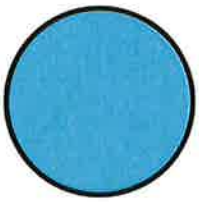

Summary for Reach C-6: C-6

[52] Hint: Inlet/Outlet conditions not evaluated
[65] Warning: Inlet elevation not specified
[55] Hint: Peak inflow is 103% of Manning's capacity
[90] Warning: Qout>Qin may require Finer Routing or smaller dt

Inflow Area = 1.550 ac,100.00% Impervious, Inflow Depth = 6.00" for 25 year adj event
Inflow = 11.76 cfs @ 11.87 hrs, Volume= 0.775 af
Outflow = 11.77 cfs @ 11.87 hrs, Volume= 0.775 af, Atten= 0%, Lag= 0.1 min

Routing by Dyn-Stor-Ind method, Time Span= 0.00-120.00 hrs, dt= 0.01 hrs
Max. Velocity= 7.34 fps, Min. Travel Time= 0.1 min
Avg. Velocity = 2.51 fps, Avg. Travel Time= 0.2 min

Peak Storage= 48 cf @ 11.87 hrs
Average Depth at Peak Storage= 1.28'
Bank-Full Depth= 1.50' Flow Area= 1.8 sf, Capacity= 11.38 cfs

18.0" Round Pipe
n= 0.012
Length= 30.0' Slope= 0.0100 '/'
Inlet Invert= 0.00', Outlet Invert= -0.30'

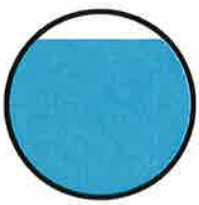

Summary for Reach C-7: C-7

[52] Hint: Inlet/Outlet conditions not evaluated
[65] Warning: Inlet elevation not specified

Inflow Area = 0.743 ac,100.00% Impervious, Inflow Depth = 6.00" for 25 year adj event
Inflow = 7.42 cfs @ 11.91 hrs, Volume= 0.372 af
Outflow = 7.40 cfs @ 11.91 hrs, Volume= 0.372 af, Atten= 0%, Lag= 0.1 min

Routing by Dyn-Stor-Ind method, Time Span= 0.00-120.00 hrs, dt= 0.01 hrs
Max. Velocity= 6.86 fps, Min. Travel Time= 0.1 min
Avg. Velocity = 2.05 fps, Avg. Travel Time= 0.2 min

Peak Storage= 32 cf @ 11.91 hrs
Average Depth at Peak Storage= 0.88'
Bank-Full Depth= 1.50' Flow Area= 1.8 sf, Capacity= 11.38 cfs

18.0" Round Pipe
n= 0.012
Length= 30.0' Slope= 0.0100 '/'
Inlet Invert= 0.00', Outlet Invert= -0.30'

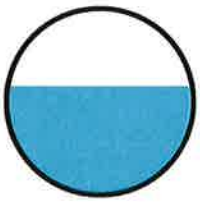

Summary for Reach C-8: C-8

[52] Hint: Inlet/Outlet conditions not evaluated
[65] Warning: Inlet elevation not specified

Inflow Area = 0.743 ac,100.00% Impervious, Inflow Depth = 6.00" for 25 year adj event
Inflow = 7.42 cfs @ 11.91 hrs, Volume= 0.372 af
Outflow = 7.40 cfs @ 11.91 hrs, Volume= 0.372 af, Atten= 0%, Lag= 0.1 min

Routing by Dyn-Stor-Ind method, Time Span= 0.00-120.00 hrs, dt= 0.01 hrs
Max. Velocity= 6.86 fps, Min. Travel Time= 0.1 min
Avg. Velocity = 2.05 fps, Avg. Travel Time= 0.2 min

Peak Storage= 32 cf @ 11.91 hrs
Average Depth at Peak Storage= 0.88'
Bank-Full Depth= 1.50' Flow Area= 1.8 sf, Capacity= 11.38 cfs

18.0" Round Pipe
n= 0.012
Length= 30.0' Slope= 0.0100 '/'
Inlet Invert= 0.00', Outlet Invert= -0.30'

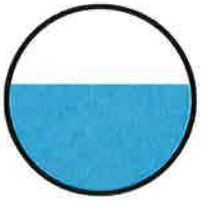

Summary for Reach C-9: C-9

[52] Hint: Inlet/Outlet conditions not evaluated
[65] Warning: Inlet elevation not specified

Inflow Area = 0.743 ac,100.00% Impervious, Inflow Depth = 6.00" for 25 year adj event
Inflow = 7.42 cfs @ 11.91 hrs, Volume= 0.372 af
Outflow = 7.40 cfs @ 11.91 hrs, Volume= 0.372 af, Atten= 0%, Lag= 0.1 min

Routing by Dyn-Stor-Ind method, Time Span= 0.00-120.00 hrs, dt= 0.01 hrs
Max. Velocity= 6.86 fps, Min. Travel Time= 0.1 min
Avg. Velocity = 2.05 fps, Avg. Travel Time= 0.2 min

Peak Storage= 32 cf @ 11.91 hrs
Average Depth at Peak Storage= 0.88'
Bank-Full Depth= 1.50' Flow Area= 1.8 sf, Capacity= 11.38 cfs

18.0" Round Pipe
n= 0.012
Length= 30.0' Slope= 0.0100 '/'
Inlet Invert= 0.00', Outlet Invert= -0.30'

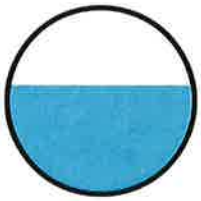

N1B-E N1B-E

Summary for Reach ~~N1B-N3:~~ (new Reach)

[65] Warning: Inlet elevation not specified

Inflow Area = 1.550 ac,100.00% Impervious, Inflow Depth = 6.00" for 25 year adj event
Inflow = 12.16 cfs @ 11.86 hrs, Volume= 0.775 af
Outflow = 11.76 cfs @ 11.87 hrs, Volume= 0.775 af, Atten= 3%, Lag= 0.5 min

Routing by Dyn-Stor-Ind method, Time Span= 0.00-120.00 hrs, dt= 0.01 hrs
Max. Velocity= 7.60 fps, Min. Travel Time= 0.7 min
Avg. Velocity = 2.79 fps, Avg. Travel Time= 1.8 min

Peak Storage= 464 cf @ 11.87 hrs
Average Depth at Peak Storage= 0.59'
Bank-Full Depth= 1.50' Flow Area= 10.1 sf, Capacity= 144.01 cfs

0.00' x 1.50' deep channel, n= 0.012
Side Slope Z-value= 5.0 4.0 '/' Top Width= 13.50'
Length= 300.0' Slope= 0.0200 '/'
Inlet Invert= 0.00', Outlet Invert= -6.00'

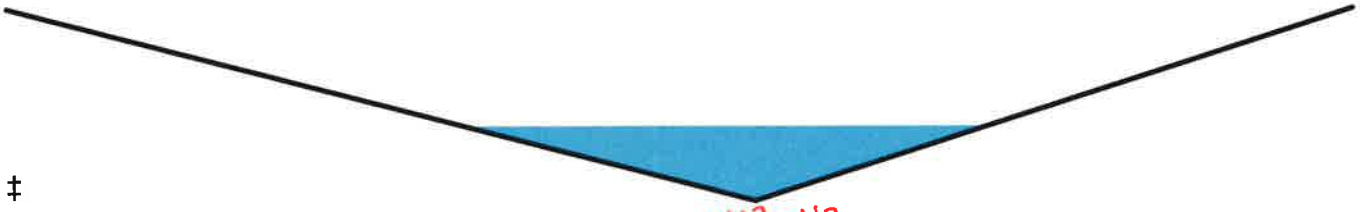

‡

N1B-N2

Summary for Reach N1B-N@: N1b-N2

[65] Warning: Inlet elevation not specified

Inflow Area = 0.940 ac,100.00% Impervious, Inflow Depth = 6.00" for 25 year adj event
Inflow = 9.39 cfs @ 11.91 hrs, Volume= 0.470 af
Outflow = 9.28 cfs @ 11.92 hrs, Volume= 0.470 af, Atten= 1%, Lag= 0.3 min

Routing by Dyn-Stor-Ind method, Time Span= 0.00-120.00 hrs, dt= 0.01 hrs
Max. Velocity= 11.93 fps, Min. Travel Time= 0.5 min
Avg. Velocity = 4.15 fps, Avg. Travel Time= 1.4 min

Peak Storage= 280 cf @ 11.92 hrs
Average Depth at Peak Storage= 0.42'
Bank-Full Depth= 1.50' Flow Area= 10.1 sf, Capacity= 284.40 cfs

0.00' x 1.50' deep channel, n= 0.012
Side Slope Z-value= 5.0 4.0 '/' Top Width= 13.50'
Length= 360.0' Slope= 0.0780 '/'
Inlet Invert= 0.00', Outlet Invert= -28.08'

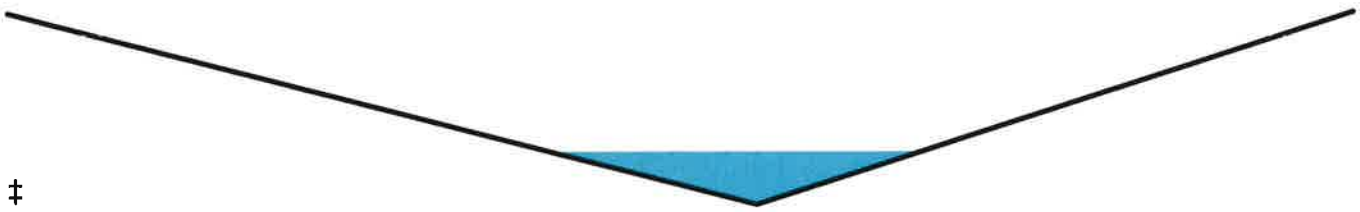

‡

Summary for Reach N1B-S2: N1B-S2

[65] Warning: Inlet elevation not specified

Inflow Area = 2.293 ac,100.00% Impervious, Inflow Depth = 6.00" for 25 year adj event
Inflow = 18.78 cfs @ 11.91 hrs, Volume= 1.147 af
Outflow = 18.69 cfs @ 11.92 hrs, Volume= 1.146 af, Atten= 0%, Lag= 0.4 min

Routing by Dyn-Stor-Ind method, Time Span= 0.00-120.00 hrs, dt= 0.01 hrs
Max. Velocity= 3.77 fps, Min. Travel Time= 0.7 min
Avg. Velocity = 1.01 fps, Avg. Travel Time= 2.5 min

Peak Storage= 743 cf @ 11.92 hrs
Average Depth at Peak Storage= 0.99'
Bank-Full Depth= 2.00' Flow Area= 14.0 sf, Capacity= 77.09 cfs

3.00' x 2.00' deep channel, n= 0.030
Side Slope Z-value= 2.0 '/' Top Width= 11.00'
Length= 150.0' Slope= 0.0100 '/'
Inlet Invert= 0.00', Outlet Invert= -1.50'



Summary for Pond Prop NE Pond: Prop NE Pond

Inflow Area = 6.029 ac,100.00% Impervious, Inflow Depth = 6.00" for 25 year adj event
Inflow = 44.80 cfs @ 11.91 hrs, Volume= 3.014 af
Outflow = 12.82 cfs @ 12.12 hrs, Volume= 2.991 af, Atten= 71%, Lag= 12.3 min
Primary = 12.82 cfs @ 12.12 hrs, Volume= 2.991 af

Routing by Dyn-Stor-Ind method, Time Span= 0.00-120.00 hrs, dt= 0.01 hrs
Peak Elev= 482.42' @ 12.12 hrs Surf.Area= 0.391 ac Storage= 1.144 af

Plug-Flow detention time= 123.7 min calculated for 2.991 af (99% of inflow)
Center-of-Mass det. time= 118.2 min (836.3 - 718.1)

Volume	Invert	Avail.Storage	Storage Description
#1	479.35'	1.732 af	**Custom Stage Data (Prismatic)** Listed below

Elevation (feet)	Surf.Area (acres)	Inc.Store (acre-feet)	Cum.Store (acre-feet)
479.35	0.315	0.000	0.000
484.00	0.430	1.732	1.732

Device	Routing	Invert	Outlet Devices
#1	Primary	479.40'	**18.0" Round Culvert** L= 30.0' Ke= 0.500 Inlet / Outlet Invert= 479.40' / 479.20' S= 0.0067 '/' Cc= 0.900 n= 0.012, Flow Area= 1.77 sf

Primary OutFlow Max=12.82 cfs @ 12.12 hrs HW=482.42' (Free Discharge)
↑—**1=Culvert** (Inlet Controls 12.82 cfs @ 7.25 fps)

Pond Prop NE Pond: Prop NE Pond

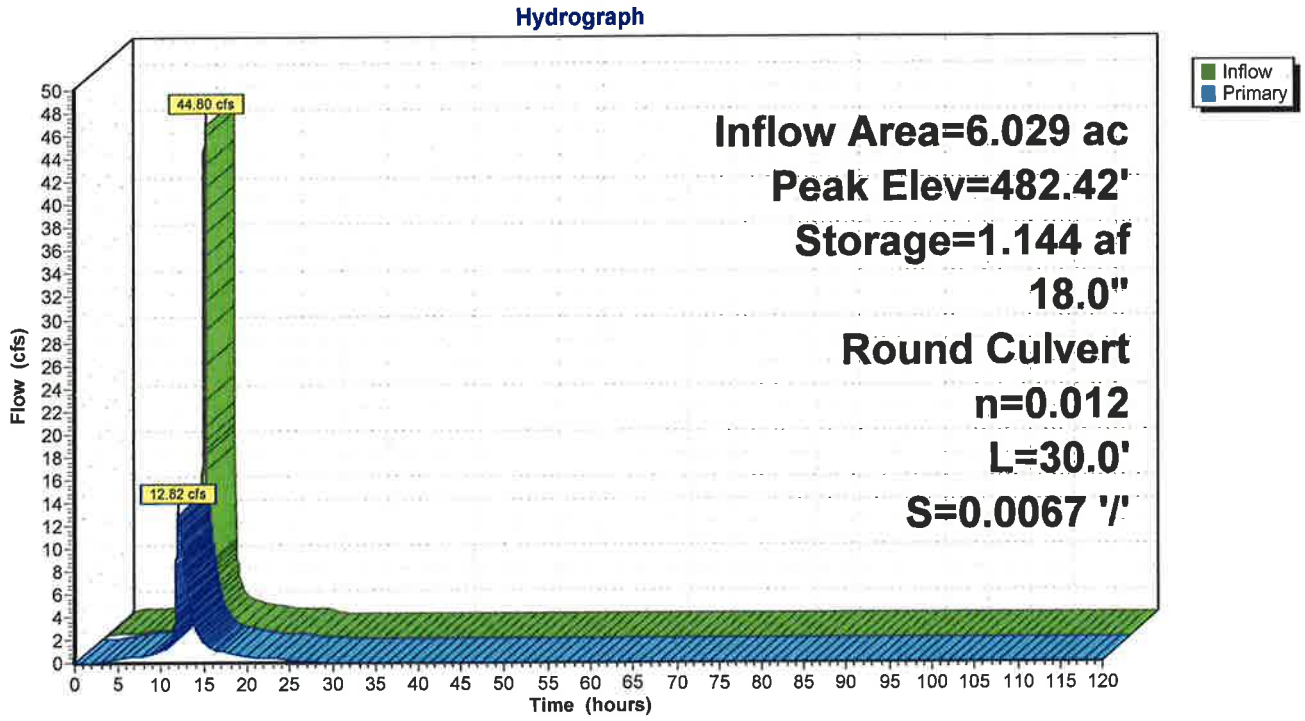

Hydrograph for Pond Prop NE Pond: Prop NE Pond

Time (hours)	Inflow (cfs)	Storage (acre-feet)	Elevation (feet)	Primary (cfs)
0.00	0.00	0.000	479.35	0.00
5.00	0.58	0.130	479.70	0.39
10.00	**1.44**	**0.211**	**479.92**	**1.07**
15.00	**1.10**	**0.284**	**480.11**	**1.90**
20.00	0.48	0.162	479.78	0.62
25.00	0.00	0.111	479.65	0.27
30.00	0.00	0.061	479.51	0.05
35.00	0.00	0.046	479.47	0.02
40.00	0.00	0.039	479.46	0.01
45.00	0.00	0.035	479.44	0.01
50.00	0.00	0.032	479.44	0.01
55.00	0.00	0.031	479.43	0.00
60.00	0.00	0.029	479.43	0.00
65.00	0.00	0.028	479.43	0.00
70.00	0.00	0.027	479.42	0.00
75.00	0.00	0.027	479.42	0.00
80.00	0.00	0.026	479.42	0.00
85.00	0.00	0.025	479.42	0.00
90.00	0.00	0.025	479.42	0.00
95.00	0.00	0.025	479.42	0.00
100.00	0.00	0.024	479.42	0.00
105.00	0.00	0.024	479.41	0.00
110.00	0.00	0.024	479.41	0.00
115.00	0.00	0.023	479.41	0.00
120.00	0.00	0.023	479.41	0.00

APPENDIX D

STORMWATER CALCULATIONS FOR NORTH QUARRY WEST DRAINAGE AREA

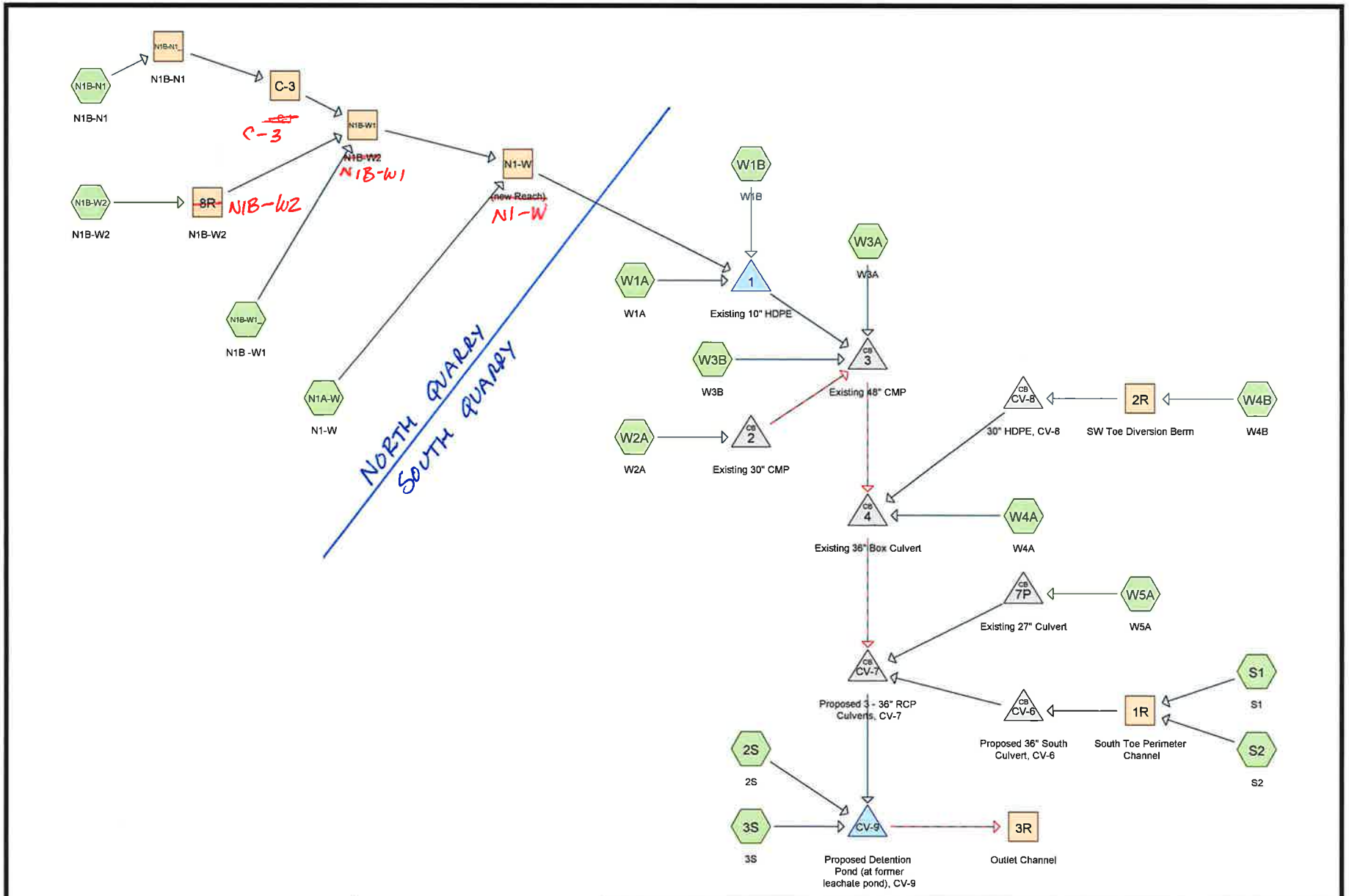

Routing Diagram for WSW Stormwater Model SW basin 3-36 inch @ weir el 453_15 w_NQCap twin 24

Prepared by Cornerstone, Printed 10/1/2013

HydroCAD® 10.00 s/n 04282 © 2011 HydroCAD Software Solutions LLC

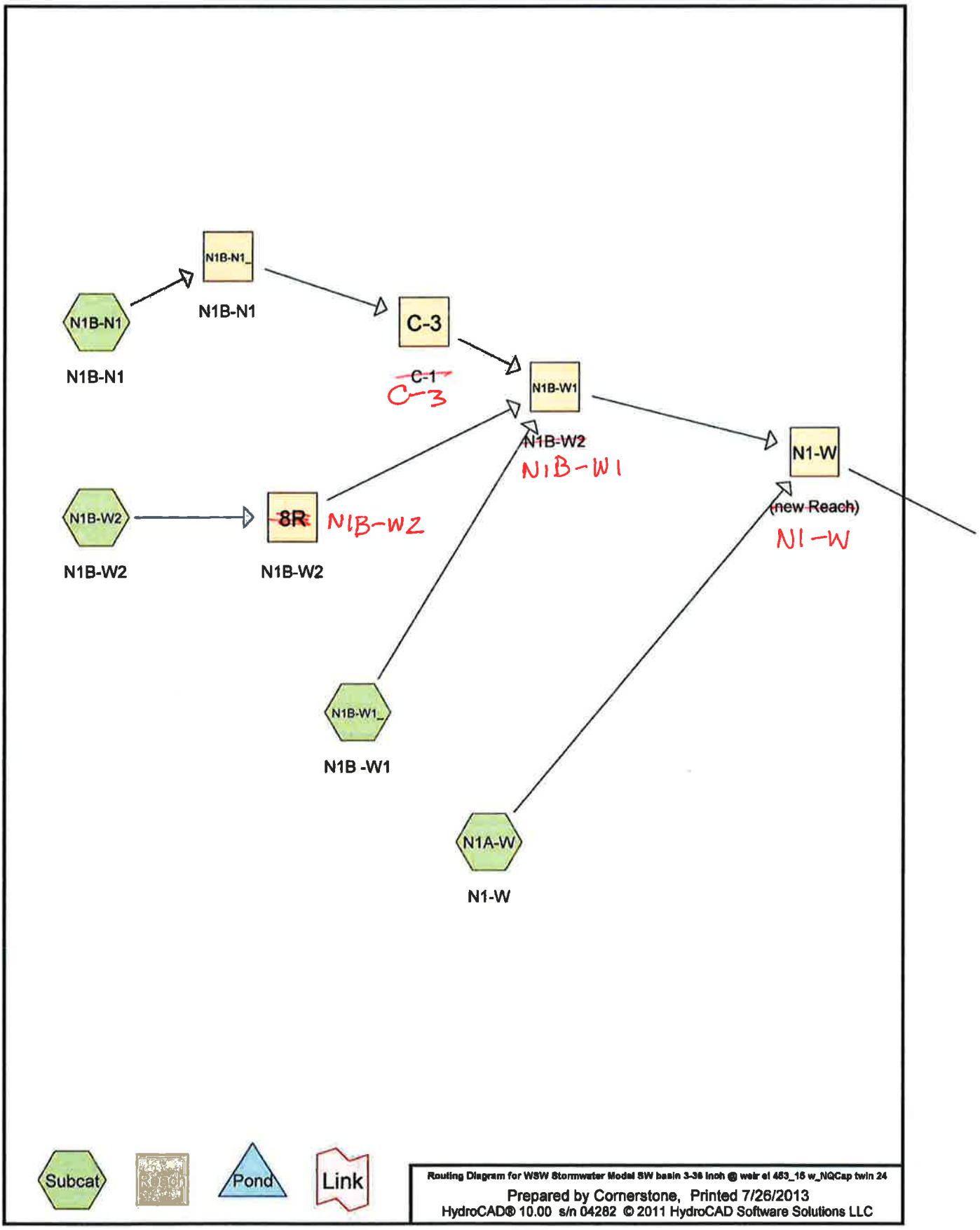
N1B-N1_
N1B-N1
N1B-N1
N1B-N1
C-3
C-1
C-3
N1B-W1
N1B-W2
N1B-W1
N1-W
(new Reach)
N1-W
N1B-W2
N1B-W2
8R
N1B-W2
N1B-W1_
N1B -W1
N1A-W
N1-W
Subcat
Reach
Pond
Link
Routing Diagram for WSW Stormwater Model SW basin 3-36 inch @ weir el 463_16 w_NQCap twin 24
Prepared by Cornerstone, Printed 7/26/2013
HydroCAD® 10.00 s/n 04282 © 2011 HydroCAD Software Solutions LLC

Area Listing (all nodes)

Area (acres)	CN	Description (subcatchment-numbers)
1.930	74	(W4A)
4.420	74	<50% Grass cover, Poor, HSG B (W3B)
1.220	84	(S2)
18.290	86	<50% Grass cover, Poor, HSG B (W1A, W2A)
1.850	87	Dirt roads, HSG C (W5A)
0.480	90	(2S)
33.040	100	(3S, N1B-N1, N1B-W1_, N1B-W2, S1, W1B, W3A, W4B)
1.850	100	North Quarry Cap (N1A-W)
63.080	**93**	**TOTAL AREA**

Soil Listing (all nodes)

Area (acres)	Soil Group	Subcatchment Numbers
0.000	HSG A	
22.710	HSG B	W1A, W2A, W3B
1.850	HSG C	W5A
0.000	HSG D	
38.520	Other	2S, 3S, N1A-W, N1B-N1, N1B-W1_, N1B-W2, S1, S2, W1B, W3A, W4A, W4B
63.080		**TOTAL AREA**

Ground Covers (all nodes)

HSG-A (acres)	HSG-B (acres)	HSG-C (acres)	HSG-D (acres)	Other (acres)	Total (acres)	Ground Cover	Subcatchment Numbers
0.000	0.000	0.000	0.000	36.670	36.670		2S, 3S, N1B-N1, N1B-W1_, N1B-W2, S1, S2, W1B, W3A, W4A, W4B
0.000	22.710	0.000	0.000	0.000	22.710	<50% Grass cover, Poor	W1A, W2A, W3B
0.000	0.000	0.000	0.000	1.850	1.850	North Quarry Cap	N1A-W
0.000	0.000	1.850	0.000	0.000	1.850	Dirt roads	W5A
0.000	**22.710**	**1.850**	**0.000**	**38.520**	**63.080**	**TOTAL AREA**	

Pipe Listing (all nodes)

Line#	Node Number	In-Invert (feet)	Out-Invert (feet)	Length (feet)	Slope (ft/ft)	n	Diam/Width (inches)	Height (inches)	Inside-Fill (inches)
1	C-3	0.00	-0.30	30.0	0.0100	0.012	18.0	0.0	0.0
2	2	454.52	454.44	27.0	0.0030	0.020	30.0	0.0	0.0
3	3	451.68	451.48	50.0	0.0040	0.020	48.0	0.0	0.0
4	4	450.42	450.17	12.0	0.0208	0.020	36.0	36.0	0.0
5	7P	450.19	450.50	127.0	-0.0024	0.025	27.0	0.0	0.0
6	CV-6	456.60	449.20	400.0	0.0185	0.012	24.0	0.0	0.0
7	CV-6	456.60	449.20	400.0	0.0185	0.012	24.0	0.0	0.0
8	CV-7	448.50	448.10	50.0	0.0080	0.011	36.0	0.0	0.0
9	CV-8	453.70	453.50	50.0	0.0040	0.012	30.0	0.0	0.0
10	CV-9	441.00	440.50	65.5	0.0076	0.012	24.0	0.0	0.0

Time span=0.00-120.00 hrs, dt=0.01 hrs, 12001 points
Runoff by SCS TR-20 method, UH=SCS
Reach routing by Dyn-Stor-Ind method - Pond routing by Dyn-Stor-Ind method

Subcatchment 2S: 2S Runoff Area=0.480 ac 0.00% Impervious Runoff Depth=4.85"
Tc=2.0 min CN=90 Runoff=4.33 cfs 0.194 af

Subcatchment 3S: 3S Runoff Area=6.790 ac 100.00% Impervious Runoff Depth=6.00"
Tc=2.0 min CN=100 Runoff=65.90 cfs 3.395 af

Subcatchment N1A-W: N1-W Runoff Area=1.850 ac 100.00% Impervious Runoff Depth=6.00"
Flow Length=300' Tc=1.5 min CN=100 Runoff=18.23 cfs 0.925 af

Subcatchment N1B-N1: N1B-N1 Runoff Area=0.860 ac 100.00% Impervious Runoff Depth=6.00"
Tc=1.0 min CN=100 Runoff=8.59 cfs 0.430 af

Subcatchment N1B-W1_: N1B -W1 Runoff Area=2.520 ac 100.00% Impervious Runoff Depth=6.00"
Tc=1.0 min CN=100 Runoff=25.16 cfs 1.260 af

Subcatchment N1B-W2: N1B-W2 Runoff Area=0.930 ac 100.00% Impervious Runoff Depth=6.00"
Tc=1.0 min CN=100 Runoff=9.29 cfs 0.465 af

Subcatchment S1: S1 Runoff Area=5.440 ac 100.00% Impervious Runoff Depth=6.00"
Flow Length=325' Slope=0.2400 '/' Tc=1.1 min CN=100 Runoff=54.11 cfs 2.720 af

Subcatchment S2: S2 Runoff Area=1.220 ac 0.00% Impervious Runoff Depth=4.20"
Flow Length=630' Tc=8.5 min CN=84 Runoff=8.06 cfs 0.427 af

Subcatchment W1A: W1A Runoff Area=8.780 ac 0.00% Impervious Runoff Depth=4.41"
Flow Length=1,200' Slope=0.0190 '/' Tc=38.5 min CN=86 Runoff=28.10 cfs 3.226 af

Subcatchment W1B: W1B Runoff Area=7.910 ac 100.00% Impervious Runoff Depth=6.00"
Flow Length=882' Tc=4.7 min CN=100 Runoff=70.74 cfs 3.955 af

Subcatchment W2A: W2A Runoff Area=9.510 ac 0.00% Impervious Runoff Depth=4.41"
Flow Length=823' Tc=21.8 min CN=86 Runoff=43.61 cfs 3.494 af

Subcatchment W3A: W3A Runoff Area=6.410 ac 100.00% Impervious Runoff Depth=6.00"
Flow Length=1,085' Tc=2.9 min CN=100 Runoff=60.60 cfs 3.205 af

Subcatchment W3B: W3B Runoff Area=4.420 ac 0.00% Impervious Runoff Depth=3.18"
Flow Length=817' Tc=24.5 min CN=74 Runoff=13.90 cfs 1.173 af

Subcatchment W4A: W4A Runoff Area=1.930 ac 0.00% Impervious Runoff Depth=3.18"
Flow Length=400' Slope=0.0900 '/' Tc=13.2 min CN=74 Runoff=8.46 cfs 0.512 af

Subcatchment W4B: W4B Runoff Area=2.180 ac 100.00% Impervious Runoff Depth=6.00"
Flow Length=658' Tc=2.8 min CN=100 Runoff=20.67 cfs 1.090 af

Subcatchment W5A: W5A Runoff Area=1.850 ac 0.00% Impervious Runoff Depth=4.52"
Tc=18.8 min CN=87 Runoff=9.37 cfs 0.696 af

Reach 1R: South Toe Perimeter Avg. Flow Depth=1.28' Max Vel=14.22 fps Inflow=59.75 cfs 3.147 af
n=0.013 L=730.0' S=0.0321 '/' Capacity=191.19 cfs Outflow=58.55 cfs 3.147 af

Reach 2R: SW Toe Diversion Berm Avg. Flow Depth=1.60' Max Vel=3.15 fps Inflow=20.67 cfs 1.090 af
n=0.012 L=260.0' S=0.0010 '/' Capacity=36.58 cfs Outflow=20.06 cfs 1.090 af

Reach 3R: Outlet Channel Avg. Flow Depth=0.88' Max Vel=2.69 fps Inflow=24.09 cfs 25.926 af
n=0.030 L=65.5' S=0.0061 '/' Capacity=76.66 cfs Outflow=24.09 cfs 25.926 af

N1B-W2
Reach 8R: N1B-W2 Avg. Flow Depth=0.90' Max Vel=2.58 fps Inflow=9.29 cfs 0.465 af
n=0.030 L=180.0' S=0.0050 '/' Capacity=10.90 cfs Outflow=9.00 cfs 0.465 af

C-3
Reach C-3: ~~C-1~~ Avg. Flow Depth=0.97' Max Vel=7.06 fps Inflow=8.52 cfs 0.430 af
18.0" Round Pipe n=0.012 L=30.0' S=0.0100 '/' Capacity=11.38 cfs Outflow=8.54 cfs 0.430 af

N1-W
Reach N1-W: (~~new Reach~~) Avg. Flow Depth=1.92' Max Vel=3.15 fps Inflow=55.88 cfs 3.080 af
n=0.030 L=350.0' S=0.0030 '/' Capacity=57.90 cfs Outflow=53.40 cfs 3.080 af

Reach N1B-N1_: N1B-N1 Avg. Flow Depth=0.41' Max Vel=11.03 fps Inflow=8.59 cfs 0.430 af
n=0.012 L=180.0' S=0.0670 '/' Capacity=263.58 cfs Outflow=8.52 cfs 0.430 af

N1B-W1
Reach N1B-W1: ~~N1B-W2~~ Avg. Flow Depth=1.87' Max Vel=2.63 fps Inflow=42.51 cfs 2.155 af
n=0.030 L=480.0' S=0.0021 '/' Capacity=43.53 cfs Outflow=38.31 cfs 2.155 af

Pond 1: Existing 10" HDPE Inflow=131.93 cfs 10.261 af
Primary=131.93 cfs 10.261 af

Pond 2: Existing 30" CMP Peak Elev=460.73' Inflow=43.61 cfs 3.494 af
Primary=30.38 cfs 2.772 af Secondary=31.93 cfs 0.722 af Outflow=43.61 cfs 3.494 af

Pond 3: Existing 48" CMP Peak Elev=460.73' Inflow=217.32 cfs 18.134 af
Primary=81.63 cfs 13.480 af Secondary=197.63 cfs 4.654 af Outflow=217.32 cfs 18.134 af

Pond 4: Existing 36" Box Culvert Peak Elev=460.62' Inflow=242.90 cfs 19.736 af
Primary=119.11 cfs 18.199 af Secondary=132.11 cfs 1.537 af Outflow=242.90 cfs 19.736 af

Pond 7P: Existing 27" Culvert Peak Elev=454.28' Inflow=9.37 cfs 0.696 af
Primary=9.37 cfs 0.696 af Secondary=0.00 cfs 0.000 af Outflow=9.37 cfs 0.696 af

Pond CV-6: Proposed 36" South Culvert, CV-6 Peak Elev=461.71' Inflow=58.55 cfs 3.147 af
Primary=58.55 cfs 3.147 af Secondary=0.00 cfs 0.000 af Outflow=58.55 cfs 3.147 af

Pond CV-7: Proposed 3 - 36" RCP Culverts, CV-7 Peak Elev=454.09' Inflow=301.78 cfs 23.579 af
Primary=206.39 cfs 22.724 af Secondary=95.39 cfs 0.855 af Outflow=301.78 cfs 23.579 af

Pond CV-8: 30" HDPE, CV-8 Peak Elev=461.77' Inflow=20.06 cfs 1.090 af
30.0" Round Culvert n=0.012 L=50.0' S=0.0040 '/' Outflow=20.06 cfs 1.090 af

Pond CV-9: Proposed Detention Pond Peak Elev=444.54' Storage=15.687 af Inflow=275.65 cfs 26.313 af
Primary=24.09 cfs 25.926 af Secondary=0.00 cfs 0.000 af Outflow=24.09 cfs 25.926 af

Total Runoff Area = 63.080 ac Runoff Volume = 27.168 af Average Runoff Depth = 5.17"
44.69% Pervious = 28.190 ac 55.31% Impervious = 34.890 ac

Summary for Subcatchment 2S: 2S

Runoff = 4.33 cfs @ 11.92 hrs, Volume= 0.194 af, Depth= 4.85"

Runoff by SCS TR-20 method, UH=SCS, Time Span= 0.00-120.00 hrs, dt= 0.01 hrs
Type II 24-hr 25-year adjusted Rainfall=6.00"

	Area (ac)	CN	Description
*	0.480	90	
	0.480		100.00% Pervious Area

Tc (min)	Length (feet)	Slope (ft/ft)	Velocity (ft/sec)	Capacity (cfs)	Description
2.0					**Direct Entry,**

Summary for Subcatchment 3S: 3S

Runoff = 65.90 cfs @ 11.92 hrs, Volume= 3.395 af, Depth= 6.00"

Runoff by SCS TR-20 method, UH=SCS, Time Span= 0.00-120.00 hrs, dt= 0.01 hrs
Type II 24-hr 25-year adjusted Rainfall=6.00"

	Area (ac)	CN	Description
*	6.790	100	
	6.790		100.00% Impervious Area

Tc (min)	Length (feet)	Slope (ft/ft)	Velocity (ft/sec)	Capacity (cfs)	Description
2.0					**Direct Entry,**

Summary for Subcatchment N1A-W: N1-W

Runoff = 18.23 cfs @ 11.92 hrs, Volume= 0.925 af, Depth= 6.00"

Runoff by SCS TR-20 method, UH=SCS, Time Span= 0.00-120.00 hrs, dt= 0.01 hrs
Type II 24-hr 25-year adjusted Rainfall=6.00"

	Area (ac)	CN	Description
*	1.850	100	North Quarry Cap
	1.850		100.00% Impervious Area

Tc (min)	Length (feet)	Slope (ft/ft)	Velocity (ft/sec)	Capacity (cfs)	Description
0.9	130	0.0600	2.35		**Sheet Flow,** Smooth surfaces n= 0.011 P2= 3.50"
0.6	170	0.2700	4.53		**Sheet Flow,** Smooth surfaces n= 0.011 P2= 3.50"
1.5	300	Total			

Summary for Subcatchment N1B-N1: N1B-N1

[49] Hint: Tc<2dt may require smaller dt

Runoff = 8.59 cfs @ 11.91 hrs, Volume= 0.430 af, Depth= 6.00"

Runoff by SCS TR-20 method, UH=SCS, Time Span= 0.00-120.00 hrs, dt= 0.01 hrs
Type II 24-hr 25-year adjusted Rainfall=6.00"

	Area (ac)	CN	Description
*	0.860	100	
	0.860		100.00% Impervious Area

Tc (min)	Length (feet)	Slope (ft/ft)	Velocity (ft/sec)	Capacity (cfs)	Description
1.0					**Direct Entry,**

Summary for Subcatchment N1B-W1_: N1B -W1

[49] Hint: Tc<2dt may require smaller dt

Runoff = 25.16 cfs @ 11.91 hrs, Volume= 1.260 af, Depth= 6.00"

Runoff by SCS TR-20 method, UH=SCS, Time Span= 0.00-120.00 hrs, dt= 0.01 hrs
Type II 24-hr 25-year adjusted Rainfall=6.00"

	Area (ac)	CN	Description
*	2.520	100	
	2.520		100.00% Impervious Area

Tc (min)	Length (feet)	Slope (ft/ft)	Velocity (ft/sec)	Capacity (cfs)	Description
1.0					**Direct Entry,**

Summary for Subcatchment N1B-W2: N1B-W2

[49] Hint: Tc<2dt may require smaller dt

Runoff = 9.29 cfs @ 11.91 hrs, Volume= 0.465 af, Depth= 6.00"

Runoff by SCS TR-20 method, UH=SCS, Time Span= 0.00-120.00 hrs, dt= 0.01 hrs
Type II 24-hr 25-year adjusted Rainfall=6.00"

	Area (ac)	CN	Description
*	0.930	100	
	0.930		100.00% Impervious Area

Tc (min)	Length (feet)	Slope (ft/ft)	Velocity (ft/sec)	Capacity (cfs)	Description
1.0					**Direct Entry,**

Summary for Subcatchment S1: S1

[49] Hint: Tc<2dt may require smaller dt

Runoff = 54.11 cfs @ 11.91 hrs, Volume= 2.720 af, Depth= 6.00"

Runoff by SCS TR-20 method, UH=SCS, Time Span= 0.00-120.00 hrs, dt= 0.01 hrs
Type II 24-hr 25-year adjusted Rainfall=6.00"

	Area (ac)	CN	Description
*	5.440	100	
	5.440		100.00% Impervious Area

Tc (min)	Length (feet)	Slope (ft/ft)	Velocity (ft/sec)	Capacity (cfs)	Description
1.1	300	0.2400	4.52		**Sheet Flow,** n= 0.012 P2= 3.50"
0.0	25	0.2400	9.94		**Shallow Concentrated Flow,** Paved Kv= 20.3 fps
1.1	325	Total			

Summary for Subcatchment S2: S2

Runoff = 8.06 cfs @ 12.00 hrs, Volume= 0.427 af, Depth= 4.20"

Runoff by SCS TR-20 method, UH=SCS, Time Span= 0.00-120.00 hrs, dt= 0.01 hrs
Type II 24-hr 25-year adjusted Rainfall=6.00"

	Area (ac)	CN	Description
*	1.220	84	
	1.220		100.00% Pervious Area

Tc (min)	Length (feet)	Slope (ft/ft)	Velocity (ft/sec)	Capacity (cfs)	Description
1.4	30	0.2000	0.35		**Sheet Flow, sheet flow** Grass: Short n= 0.150 P2= 3.50"
7.1	600	0.0200	1.41		**Shallow Concentrated Flow, shallow concentrated** Nearly Bare & Untilled Kv= 10.0 fps
8.5	630	Total			

Summary for Subcatchment W1A: W1A

Runoff = 28.10 cfs @ 12.33 hrs, Volume= 3.226 af, Depth= 4.41"

Runoff by SCS TR-20 method, UH=SCS, Time Span= 0.00-120.00 hrs, dt= 0.01 hrs
Type II 24-hr 25-year adjusted Rainfall=6.00"

	Area (ac)	CN	Description
*	8.780	86	<50% Grass cover, Poor, HSG B
	8.780		100.00% Pervious Area

Tc (min)	Length (feet)	Slope (ft/ft)	Velocity (ft/sec)	Capacity (cfs)	Description
23.0	300	0.0190	0.22		**Sheet Flow, Sheet Flow** Grass: Short n= 0.150 P2= 3.50"
15.5	900	0.0190	0.96		**Shallow Concentrated Flow,** Short Grass Pasture Kv= 7.0 fps
38.5	1,200	Total			

Summary for Subcatchment W1B: W1B

Runoff = 70.74 cfs @ 11.95 hrs, Volume= 3.955 af, Depth= 6.00"

Runoff by SCS TR-20 method, UH=SCS, Time Span= 0.00-120.00 hrs, dt= 0.01 hrs
Type II 24-hr 25-year adjusted Rainfall=6.00"

	Area (ac)	CN	Description
*	7.910	100	
	7.910		100.00% Impervious Area

Tc (min)	Length (feet)	Slope (ft/ft)	Velocity (ft/sec)	Capacity (cfs)	Description
3.0	283	0.0180	1.58		**Sheet Flow,** n= 0.012 P2= 3.50"
0.2	17	0.0440	1.29		**Sheet Flow,** n= 0.012 P2= 3.50"
0.1	28	0.0440	4.26		**Shallow Concentrated Flow,** Paved Kv= 20.3 fps
0.4	122	0.0570	4.85		**Shallow Concentrated Flow,** Paved Kv= 20.3 fps
0.4	249	0.2450	10.05		**Shallow Concentrated Flow,** Paved Kv= 20.3 fps
0.6	183	0.0550	4.76		**Shallow Concentrated Flow,** Paved Kv= 20.3 fps
4.7	882	Total			

Summary for Subcatchment W2A: W2A

Runoff = 43.61 cfs @ 12.14 hrs, Volume= 3.494 af, Depth= 4.41"

Runoff by SCS TR-20 method, UH=SCS, Time Span= 0.00-120.00 hrs, dt= 0.01 hrs
Type II 24-hr 25-year adjusted Rainfall=6.00"

Area (ac)	CN	Description
* 9.510	86	<50% Grass cover, Poor, HSG B
9.510		100.00% Pervious Area

Tc (min)	Length (feet)	Slope (ft/ft)	Velocity (ft/sec)	Capacity (cfs)	Description
9.2	156	0.0510	0.28		**Sheet Flow,** Grass: Short n= 0.150 P2= 3.50"
8.6	144	0.0520	0.28		**Sheet Flow,** Grass: Short n= 0.150 P2= 3.50"
0.9	88	0.0520	1.60		**Shallow Concentrated Flow,** Short Grass Pasture Kv= 7.0 fps
1.2	249	0.2450	3.46		**Shallow Concentrated Flow,** Short Grass Pasture Kv= 7.0 fps
1.9	186	0.0540	1.63		**Shallow Concentrated Flow,** Short Grass Pasture Kv= 7.0 fps
21.8	823	Total			

Summary for Subcatchment W3A: W3A

Runoff = 60.60 cfs @ 11.93 hrs, Volume= 3.205 af, Depth= 6.00"

Runoff by SCS TR-20 method, UH=SCS, Time Span= 0.00-120.00 hrs, dt= 0.01 hrs
Type II 24-hr 25-year adjusted Rainfall=6.00"

Area (ac)	CN	Description
* 6.410	100	
6.410		100.00% Impervious Area

Tc (min)	Length (feet)	Slope (ft/ft)	Velocity (ft/sec)	Capacity (cfs)	Description
1.1	200	0.1000	3.15		**Sheet Flow,** Smooth surfaces n= 0.011 P2= 3.50"
1.5	585	0.1000	6.42		**Shallow Concentrated Flow,** Paved Kv= 20.3 fps
0.3	300	0.0060	16.91	2,789.97	**Channel Flow,** Area= 165.0 sf Perim= 28.4' r= 5.81' n= 0.022 Earth, clean & straight
2.9	1,085	Total			

Summary for Subcatchment W3B: W3B

Runoff = 13.90 cfs @ 12.17 hrs, Volume= 1.173 af, Depth= 3.18"

Runoff by SCS TR-20 method, UH=SCS, Time Span= 0.00-120.00 hrs, dt= 0.01 hrs
Type II 24-hr 25-year adjusted Rainfall=6.00"

	Area (ac)	CN	Description
*	4.420	74	<50% Grass cover, Poor, HSG B
	4.420		100.00% Pervious Area

Tc (min)	Length (feet)	Slope (ft/ft)	Velocity (ft/sec)	Capacity (cfs)	Description
19.7	300	0.0280	0.25		**Sheet Flow,** Grass: Short n= 0.150 P2= 3.50"
3.0	209	0.0280	1.17		**Shallow Concentrated Flow,** Short Grass Pasture Kv= 7.0 fps
1.6	206	0.0970	2.18		**Shallow Concentrated Flow,** Short Grass Pasture Kv= 7.0 fps
0.2	102	0.0030	8.41	1,009.44	**Channel Flow,** Area= 120.0 sf Perim= 35.0' r= 3.43' n= 0.022 Earth, clean & straight
24.5	817	Total			

Summary for Subcatchment W4A: W4A

Runoff = 8.46 cfs @ 12.05 hrs, Volume= 0.512 af, Depth= 3.18"

Runoff by SCS TR-20 method, UH=SCS, Time Span= 0.00-120.00 hrs, dt= 0.01 hrs
Type II 24-hr 25-year adjusted Rainfall=6.00"

	Area (ac)	CN	Description
*	1.930	74	
	1.930		100.00% Pervious Area

Tc (min)	Length (feet)	Slope (ft/ft)	Velocity (ft/sec)	Capacity (cfs)	Description
12.4	300	0.0900	0.40		**Sheet Flow,** Grass: Short n= 0.150 P2= 3.50"
0.8	100	0.0900	2.10		**Shallow Concentrated Flow,** Short Grass Pasture Kv= 7.0 fps
13.2	400	Total			

Summary for Subcatchment W4B: W4B

Runoff = 20.67 cfs @ 11.93 hrs, Volume= 1.090 af, Depth= 6.00"

Runoff by SCS TR-20 method, UH=SCS, Time Span= 0.00-120.00 hrs, dt= 0.01 hrs
Type II 24-hr 25-year adjusted Rainfall=6.00"

Area (ac)	CN	Description
* 2.180	100	
2.180		100.00% Impervious Area

Tc (min)	Length (feet)	Slope (ft/ft)	Velocity (ft/sec)	Capacity (cfs)	Description
2.1	288	0.0450	2.29		**Sheet Flow,** n= 0.012 P2= 3.50"
0.1	12	0.2220	2.30		**Sheet Flow,** n= 0.012 P2= 3.50"
0.6	358	0.2220	9.56		**Shallow Concentrated Flow,** Paved Kv= 20.3 fps
2.8	658	Total			

Summary for Subcatchment W5A: W5A

Runoff = 9.37 cfs @ 12.10 hrs, Volume= 0.696 af, Depth= 4.52"

Runoff by SCS TR-20 method, UH=SCS, Time Span= 0.00-120.00 hrs, dt= 0.01 hrs
Type II 24-hr 25-year adjusted Rainfall=6.00"

Area (ac)	CN	Description
1.850	87	Dirt roads, HSG C
1.850		100.00% Pervious Area

Tc (min)	Length (feet)	Slope (ft/ft)	Velocity (ft/sec)	Capacity (cfs)	Description
18.8					**Direct Entry,**

Summary for Reach 1R: South Toe Perimeter Channel

Inflow Area = 6.660 ac, 81.68% Impervious, Inflow Depth = 5.67" for 25-year adjusted event
Inflow = 59.75 cfs @ 11.91 hrs, Volume= 3.147 af
Outflow = 58.55 cfs @ 11.92 hrs, Volume= 3.147 af, Atten= 2%, Lag= 0.5 min

Routing by Dyn-Stor-Ind method, Time Span= 0.00-120.00 hrs, dt= 0.01 hrs
Max. Velocity= 14.22 fps, Min. Travel Time= 0.9 min
Avg. Velocity = 4.86 fps, Avg. Travel Time= 2.5 min

Peak Storage= 3,005 cf @ 11.92 hrs
Average Depth at Peak Storage= 1.28'
Bank-Full Depth= 2.00' Flow Area= 10.0 sf, Capacity= 191.19 cfs

0.00' x 2.00' deep channel, n= 0.013 Corrugated PE, smooth interior
Side Slope Z-value= 1.0 4.0 '/' Top Width= 10.00'
Length= 730.0' Slope= 0.0321 '/'
Inlet Invert= 480.00', Outlet Invert= 456.60'

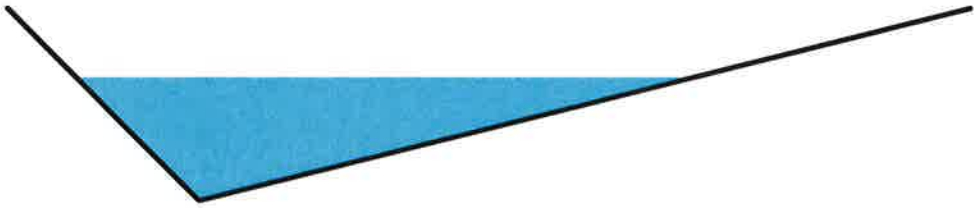

Summary for Reach 2R: SW Toe Diversion Berm

[65] Warning: Inlet elevation not specified

Inflow Area = 2.180 ac,100.00% Impervious, Inflow Depth = 6.00" for 25-year adjusted event
Inflow = 20.67 cfs @ 11.93 hrs, Volume= 1.090 af
Outflow = 20.06 cfs @ 11.94 hrs, Volume= 1.090 af, Atten= 3%, Lag= 0.8 min

Routing by Dyn-Stor-Ind method, Time Span= 0.00-120.00 hrs, dt= 0.01 hrs
Max. Velocity= 3.15 fps, Min. Travel Time= 1.4 min
Avg. Velocity = 1.05 fps, Avg. Travel Time= 4.1 min

Peak Storage= 1,656 cf @ 11.94 hrs
Average Depth at Peak Storage= 1.60'
Bank-Full Depth= 2.00' Flow Area= 10.0 sf, Capacity= 36.58 cfs

0.00' x 2.00' deep channel, n= 0.012
Side Slope Z-value= 1.0 4.0 '/' Top Width= 10.00'
Length= 260.0' Slope= 0.0010 '/'
Inlet Invert= 0.00', Outlet Invert= -0.26'



Summary for Reach 3R: Outlet Channel

Inflow Area = 63.080 ac, 55.31% Impervious, Inflow Depth > 4.93" for 25-year adjusted event
Inflow = 24.09 cfs @ 13.23 hrs, Volume= 25.926 af
Outflow = 24.09 cfs @ 13.23 hrs, Volume= 25.926 af, Atten= 0%, Lag= 0.3 min

Routing by Dyn-Stor-Ind method, Time Span= 0.00-120.00 hrs, dt= 0.01 hrs
Max. Velocity= 2.69 fps, Min. Travel Time= 0.4 min
Avg. Velocity = 0.93 fps, Avg. Travel Time= 1.2 min

Peak Storage= 586 cf @ 13.23 hrs
Average Depth at Peak Storage= 0.88'
Bank-Full Depth= 1.50' Flow Area= 20.0 sf, Capacity= 76.66 cfs

20.00' x 1.50' deep Parabolic Channel, n= 0.030 Grassed
Length= 65.5' Slope= 0.0061 '/'
Inlet Invert= 440.50', Outlet Invert= 440.10'

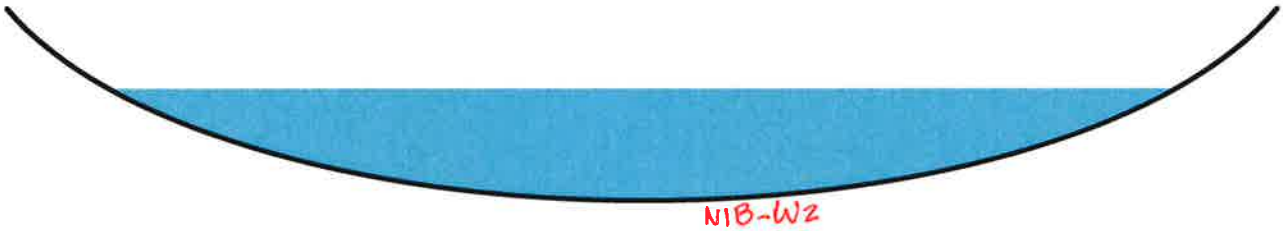

‡

N1B-W2

Summary for Reach ~~8R~~: N1B-W2

[65] Warning: Inlet elevation not specified

Inflow Area = 0.930 ac,100.00% Impervious, Inflow Depth = 6.00" for 25-year adjusted event
Inflow = 9.29 cfs @ 11.91 hrs, Volume= 0.465 af
Outflow = 9.00 cfs @ 11.92 hrs, Volume= 0.465 af, Atten= 3%, Lag= 0.6 min

Routing by Dyn-Stor-Ind method, Time Span= 0.00-120.00 hrs, dt= 0.01 hrs
Max. Velocity= 2.58 fps, Min. Travel Time= 1.2 min
Avg. Velocity = 0.58 fps, Avg. Travel Time= 5.2 min

Peak Storage= 629 cf @ 11.92 hrs
Average Depth at Peak Storage= 0.90'
Bank-Full Depth= 1.00' Flow Area= 4.0 sf, Capacity= 10.90 cfs

3.00' x 1.00' deep channel, n= 0.030
Side Slope Z-value= 1.0 '/' Top Width= 5.00'
Length= 180.0' Slope= 0.0050 '/'
Inlet Invert= 0.00', Outlet Invert= -0.90'



Summary for Reach C-3: ~~C-1~~

[52] Hint: Inlet/Outlet conditions not evaluated
[65] Warning: Inlet elevation not specified
[90] Warning: Qout>Qin may require Finer Routing or smaller dt

Inflow Area = 0.860 ac,100.00% Impervious, Inflow Depth = 6.00" for 25-year adjusted event
Inflow = 8.52 cfs @ 11.91 hrs, Volume= 0.430 af
Outflow = 8.54 cfs @ 11.92 hrs, Volume= 0.430 af, Atten= 0%, Lag= 0.1 min

Routing by Dyn-Stor-Ind method, Time Span= 0.00-120.00 hrs, dt= 0.01 hrs
Max. Velocity= 7.06 fps, Min. Travel Time= 0.1 min
Avg. Velocity = 2.13 fps, Avg. Travel Time= 0.2 min

Peak Storage= 36 cf @ 11.92 hrs
Average Depth at Peak Storage= 0.97'
Bank-Full Depth= 1.50' Flow Area= 1.8 sf, Capacity= 11.38 cfs

18.0" Round Pipe
n= 0.012
Length= 30.0' Slope= 0.0100 '/'
Inlet Invert= 0.00', Outlet Invert= -0.30'

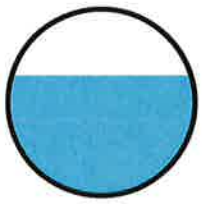

Summary for Reach N1-W: (~~new Reach~~)

[65] Warning: Inlet elevation not specified

Inflow Area = 6.160 ac,100.00% Impervious, Inflow Depth = 6.00" for 25-year adjusted event
Inflow = 55.88 cfs @ 11.92 hrs, Volume= 3.080 af
Outflow = 53.40 cfs @ 11.94 hrs, Volume= 3.080 af, Atten= 4%, Lag= 1.1 min

Routing by Dyn-Stor-Ind method, Time Span= 0.00-120.00 hrs, dt= 0.01 hrs
Max. Velocity= 3.15 fps, Min. Travel Time= 1.9 min
Avg. Velocity = 0.72 fps, Avg. Travel Time= 8.1 min

Peak Storage= 5,939 cf @ 11.94 hrs
Average Depth at Peak Storage= 1.92'
Bank-Full Depth= 2.00' Flow Area= 18.0 sf, Capacity= 57.90 cfs

5.00' x 2.00' deep channel, n= 0.030
Side Slope Z-value= 2.0 '/' Top Width= 13.00'
Length= 350.0' Slope= 0.0030 '/'
Inlet Invert= 0.00', Outlet Invert= -1.05'



Summary for Reach N1B-N1_: N1B-N1

[65] Warning: Inlet elevation not specified

Inflow Area = 0.860 ac,100.00% Impervious, Inflow Depth = 6.00" for 25-year adjusted event
Inflow = 8.59 cfs @ 11.91 hrs, Volume= 0.430 af
Outflow = 8.52 cfs @ 11.91 hrs, Volume= 0.430 af, Atten= 1%, Lag= 0.2 min

Routing by Dyn-Stor-Ind method, Time Span= 0.00-120.00 hrs, dt= 0.01 hrs
Max. Velocity= 11.03 fps, Min. Travel Time= 0.3 min
Avg. Velocity = 3.85 fps, Avg. Travel Time= 0.8 min

Peak Storage= 139 cf @ 11.91 hrs
Average Depth at Peak Storage= 0.41'
Bank-Full Depth= 1.50' Flow Area= 10.1 sf, Capacity= 263.58 cfs

0.00' x 1.50' deep channel, n= 0.012
Side Slope Z-value= 4.0 5.0 '/' Top Width= 13.50'
Length= 180.0' Slope= 0.0670 '/'
Inlet Invert= 0.00', Outlet Invert= -12.06'

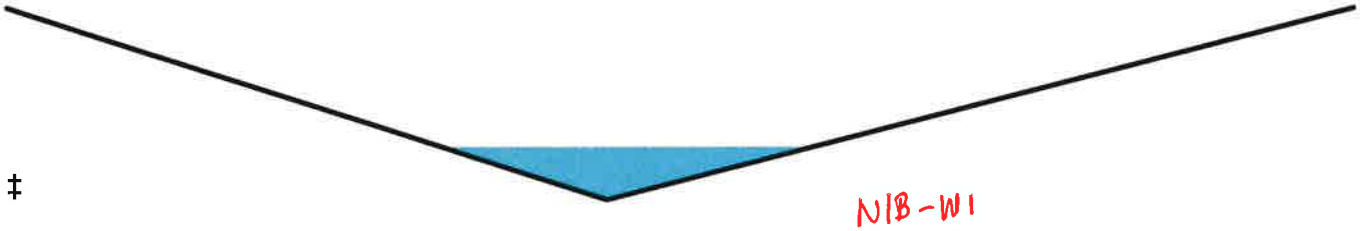

‡

N1B-W1

Summary for Reach N1B-W1: ~~N1B-W2~~

[65] Warning: Inlet elevation not specified

Inflow Area = 4.310 ac,100.00% Impervious, Inflow Depth = 6.00" for 25-year adjusted event
Inflow = 42.51 cfs @ 11.91 hrs, Volume= 2.155 af
Outflow = 38.31 cfs @ 11.93 hrs, Volume= 2.155 af, Atten= 10%, Lag= 1.3 min

Routing by Dyn-Stor-Ind method, Time Span= 0.00-120.00 hrs, dt= 0.01 hrs
Max. Velocity= 2.63 fps, Min. Travel Time= 3.0 min
Avg. Velocity = 0.58 fps, Avg. Travel Time= 13.8 min

Peak Storage= 7,002 cf @ 11.93 hrs
Average Depth at Peak Storage= 1.87'
Bank-Full Depth= 2.00' Flow Area= 16.0 sf, Capacity= 43.53 cfs

5.00' x 2.00' deep channel, n= 0.030
Side Slope Z-value= 1.5 '/' Top Width= 11.00'
Length= 480.0' Slope= 0.0021 '/'
Inlet Invert= 0.00', Outlet Invert= -1.01'



Summary for Pond 1: Existing 10" HDPE

[40] Hint: Not Described (Outflow=Inflow)

Inflow Area = 22.850 ac, 61.58% Impervious, Inflow Depth = 5.39" for 25-year adjusted event
Inflow = 131.93 cfs @ 11.95 hrs, Volume= 10.261 af
Primary = 131.93 cfs @ 11.95 hrs, Volume= 10.261 af, Atten= 0%, Lag= 0.0 min

Routing by Dyn-Stor-Ind method, Time Span= 0.00-120.00 hrs, dt= 0.01 hrs

Summary for Pond 2: Existing 30" CMP

[57] Hint: Peaked at 460.73' (Flood elevation advised)

Inflow Area = 9.510 ac, 0.00% Impervious, Inflow Depth = 4.41" for 25-year adjusted event
Inflow = 43.61 cfs @ 12.14 hrs, Volume= 3.494 af
Outflow = 43.61 cfs @ 12.14 hrs, Volume= 3.494 af, Atten= 0%, Lag= 0.0 min
Primary = 30.38 cfs @ 12.28 hrs, Volume= 2.772 af
Secondary = 31.93 cfs @ 12.09 hrs, Volume= 0.722 af

Routing by Dyn-Stor-Ind method, Time Span= 0.00-120.00 hrs, dt= 0.01 hrs
Peak Elev= 460.73' @ 11.97 hrs

Device	Routing	Invert	Outlet Devices
#1	Primary	454.52'	**30.0" Round Culvert** L= 27.0' Ke= 0.500 Inlet / Outlet Invert= 454.52' / 454.44' S= 0.0030 '/' Cc= 0.900 n= 0.020 Corrugated PE, corrugated interior, Flow Area= 4.91 sf
#2	Secondary	460.00'	**100.0' long x 10.0' breadth Broad-Crested Rectangular Weir** Head (feet) 0.20 0.40 0.60 0.80 1.00 1.20 1.40 1.60 Coef. (English) 2.49 2.56 2.70 2.69 2.68 2.69 2.67 2.64

Primary OutFlow Max=30.80 cfs @ 12.28 hrs HW=460.02' TW=458.32' (Dynamic Tailwater)
↑—**1=Culvert** (Inlet Controls 30.80 cfs @ 6.27 fps)

Secondary OutFlow Max=34.47 cfs @ 12.09 hrs HW=460.28' TW=460.08' (Dynamic Tailwater)
↑—**2=Broad-Crested Rectangular Weir** (Weir Controls 34.47 cfs @ 1.24 fps)

Summary for Pond 3: Existing 48" CMP

[57] Hint: Peaked at 460.73' (Flood elevation advised)
[80] Warning: Exceeded Pond 2 by 0.67' @ 11.82 hrs (19.31 cfs 0.142 af)
[80] Warning: Exceeded Pond 2 by 0.67' @ 11.82 hrs (3.50 cfs 0.416 af)

Inflow Area =	43.190 ac,	47.42% Impervious,	Inflow Depth =	5.04"	for 25-year adjusted event
Inflow =	217.32 cfs @	11.95 hrs,	Volume=	18.134 af	
Outflow =	217.32 cfs @	11.95 hrs,	Volume=	18.134 af,	Atten= 0%, Lag= 0.0 min
Primary =	81.63 cfs @	12.33 hrs,	Volume=	13.480 af	
Secondary =	197.63 cfs @	11.95 hrs,	Volume=	4.654 af	

Routing by Dyn-Stor-Ind method, Time Span= 0.00-120.00 hrs, dt= 0.01 hrs
Peak Elev= 460.73' @ 11.95 hrs

Device	Routing	Invert	Outlet Devices
#1	Primary	451.68'	**48.0" Round CMP_Round 48"** L= 50.0' Ke= 0.500 Inlet / Outlet Invert= 451.68' / 451.48' S= 0.0040 '/' Cc= 0.900 n= 0.020 Corrugated PE, corrugated interior, Flow Area= 12.57 sf
#2	Secondary	458.00'	**50.0' long x 10.0' breadth Broad-Crested Rectangular Weir** Head (feet) 0.20 0.40 0.60 0.80 1.00 1.20 1.40 1.60 Coef. (English) 2.49 2.56 2.70 2.69 2.68 2.69 2.67 2.64

Primary OutFlow Max=85.56 cfs @ 12.33 hrs HW=457.97' TW=455.97' (Dynamic Tailwater)
↑—**1=CMP_Round 48"** (Inlet Controls 85.56 cfs @ 6.81 fps)

Secondary OutFlow Max=191.56 cfs @ 11.95 hrs HW=460.72' TW=460.62' (Dynamic Tailwater)
↑—**2=Broad-Crested Rectangular Weir** (Weir Controls 191.56 cfs @ 1.41 fps)

Summary for Pond 4: Existing 36" Box Culvert

[57] Hint: Peaked at 460.62' (Flood elevation advised)
[80] Warning: Exceeded Pond 3 by 0.80' @ 11.81 hrs (54.13 cfs 0.100 af)
[80] Warning: Exceeded Pond 3 by 0.80' @ 11.81 hrs (296.21 cfs 0.561 af)
[80] Warning: Exceeded Pond CV-8 by 0.65' @ 11.81 hrs (15.06 cfs 0.075 af)

Inflow Area =	47.300 ac,	47.91% Impervious,	Inflow Depth =	5.01"	for 25-year adjusted event
Inflow =	242.90 cfs @	11.95 hrs,	Volume=	19.736 af	
Outflow =	242.90 cfs @	11.95 hrs,	Volume=	19.736 af,	Atten= 0%, Lag= 0.0 min
Primary =	119.11 cfs @	12.08 hrs,	Volume=	18.199 af	
Secondary =	132.11 cfs @	11.95 hrs,	Volume=	1.537 af	

Routing by Dyn-Stor-Ind method, Time Span= 0.00-120.00 hrs, dt= 0.01 hrs

Peak Elev= 460.62' @ 11.95 hrs

Device	Routing	Invert	Outlet Devices
#1	Primary	450.42'	**36.0" W x 36.0" H Box Culvert** L= 12.0' Ke= 0.500 Inlet / Outlet Invert= 450.42' / 450.17' S= 0.0208 '/' Cc= 0.900 n= 0.020 Corrugated PE, corrugated interior, Flow Area= 9.00 sf
#2	Secondary	460.00'	**100.0' long x 100.0' breadth Broad-Crested Rectangular Weir** Head (feet) 0.20 0.40 0.60 0.80 1.00 1.20 1.40 1.60 Coef. (English) 2.68 2.70 2.70 2.64 2.63 2.64 2.64 2.63

Primary OutFlow Max=119.59 cfs @ 12.08 hrs HW=460.03' TW=452.14' (Dynamic Tailwater)
↑—**1=Culvert** (Inlet Controls 119.59 cfs @ 13.29 fps)

Secondary OutFlow Max=131.71 cfs @ 11.95 hrs HW=460.62' TW=454.08' (Dynamic Tailwater)
↑—**2=Broad-Crested Rectangular Weir** (Weir Controls 131.71 cfs @ 2.12 fps)

Summary for Pond 7P: Existing 27" Culvert

[57] Hint: Peaked at 454.28' (Flood elevation advised)

Inflow Area =	1.850 ac,	0.00% Impervious,	Inflow Depth =	4.52"	for 25-year adjusted event
Inflow =	9.37 cfs @	12.10 hrs,	Volume=	0.696 af	
Outflow =	9.37 cfs @	12.10 hrs,	Volume=	0.696 af,	Atten= 0%, Lag= 0.0 min
Primary =	9.37 cfs @	12.10 hrs,	Volume=	0.696 af	
Secondary =	0.00 cfs @	0.00 hrs,	Volume=	0.000 af	

Routing by Dyn-Stor-Ind method, Time Span= 0.00-120.00 hrs, dt= 0.01 hrs
Peak Elev= 454.28' @ 11.96 hrs

Device	Routing	Invert	Outlet Devices
#1	Primary	450.50'	**27.0" Round Culvert** L= 127.0' Ke= 0.500 Inlet / Outlet Invert= 450.19' / 450.50' S= -0.0024 '/' Cc= 0.900 n= 0.025 Corrugated metal, Flow Area= 3.98 sf
#2	Secondary	454.50'	**100.0' long x 30.0' breadth Broad-Crested Rectangular Weir** Head (feet) 0.20 0.40 0.60 0.80 1.00 1.20 1.40 1.60 Coef. (English) 2.68 2.70 2.70 2.64 2.63 2.64 2.64 2.63

Primary OutFlow Max=9.48 cfs @ 12.10 hrs HW=452.65' TW=452.00' (Dynamic Tailwater)
↑—**1=Culvert** (Barrel Controls 9.48 cfs @ 2.72 fps)

Secondary OutFlow Max=0.00 cfs @ 0.00 hrs HW=450.50' (Free Discharge)
↑—**2=Broad-Crested Rectangular Weir** (Controls 0.00 cfs)

Summary for Pond CV-6: Proposed 36" South Culvert, CV-6

[57] Hint: Peaked at 461.71' (Flood elevation advised)
[62] Hint: Exceeded Reach 1R OUTLET depth by 3.81' @ 11.92 hrs

Inflow Area = 6.660 ac, 81.68% Impervious, Inflow Depth = 5.67" for 25-year adjusted event
Inflow = 58.55 cfs @ 11.92 hrs, Volume= 3.147 af
Outflow = 58.55 cfs @ 11.92 hrs, Volume= 3.147 af, Atten= 0%, Lag= 0.0 min
Primary = 58.55 cfs @ 11.92 hrs, Volume= 3.147 af
Secondary = 0.00 cfs @ 0.00 hrs, Volume= 0.000 af

Routing by Dyn-Stor-Ind method, Time Span= 0.00-120.00 hrs, dt= 0.01 hrs
Peak Elev= 461.71' @ 11.92 hrs

Device	Routing	Invert	Outlet Devices
#1	Primary	456.60'	**24.0" Round Culvert** L= 400.0' Ke= 0.500 Inlet / Outlet Invert= 456.60' / 449.20' S= 0.0185 '/' Cc= 0.900 n= 0.012, Flow Area= 3.14 sf
#2	Secondary	464.00'	**20.0' long x 5.0' breadth Broad-Crested Rectangular Weir** Head (feet) 0.20 0.40 0.60 0.80 1.00 1.20 1.40 1.60 1.80 2.00 2.50 3.00 3.50 4.00 4.50 5.00 5.50 Coef. (English) 2.34 2.50 2.70 2.68 2.68 2.66 2.65 2.65 2.65 2.65 2.67 2.66 2.68 2.70 2.74 2.79 2.88
#3	Primary	456.60'	**24.0" Round Culvert** L= 400.0' Ke= 0.500 Inlet / Outlet Invert= 456.60' / 449.20' S= 0.0185 '/' Cc= 0.900 n= 0.012, Flow Area= 3.14 sf

Primary OutFlow Max=58.16 cfs @ 11.92 hrs HW=461.68' TW=454.03' (Dynamic Tailwater)
↑—**1=Culvert** (Outlet Controls 29.08 cfs @ 9.26 fps)
└—**3=Culvert** (Outlet Controls 29.08 cfs @ 9.26 fps)

Secondary OutFlow Max=0.00 cfs @ 0.00 hrs HW=456.60' (Free Discharge)
↑—**2=Broad-Crested Rectangular Weir** (Controls 0.00 cfs)

Summary for Pond CV-7: Proposed 3 - 36" RCP Culverts, CV-7

[57] Hint: Peaked at 454.09' (Flood elevation advised)
[80] Warning: Exceeded Pond 7P by 0.29' @ 11.81 hrs (6.25 cfs 0.035 af)

Inflow Area = 55.810 ac, 50.35% Impervious, Inflow Depth = 5.07" for 25-year adjusted event
Inflow = 301.78 cfs @ 11.94 hrs, Volume= 23.579 af
Outflow = 301.78 cfs @ 11.94 hrs, Volume= 23.579 af, Atten= 0%, Lag= 0.0 min
Primary = 206.39 cfs @ 11.94 hrs, Volume= 22.724 af
Secondary = 95.39 cfs @ 11.94 hrs, Volume= 0.855 af

Routing by Dyn-Stor-Ind method, Time Span= 0.00-120.00 hrs, dt= 0.01 hrs
Peak Elev= 454.09' @ 11.94 hrs

Device	Routing	Invert	Outlet Devices
#1	Primary	448.50'	**36.0" Round 3 - 36" RCP Culverts X 3.00** L= 50.0' Ke= 0.500 Inlet / Outlet Invert= 448.50' / 448.10' S= 0.0080 '/' Cc= 0.900 n= 0.011, Flow Area= 7.07 sf
#2	Secondary	453.15'	**40.0' long x 15.0' breadth Broad-Crested Rectangular Weir** Head (feet) 0.20 0.40 0.60 0.80 1.00 1.20 1.40 1.60 Coef. (English) 2.68 2.70 2.70 2.64 2.63 2.64 2.64 2.63

Primary OutFlow Max=206.38 cfs @ 11.94 hrs HW=454.09' TW=443.18' (Dynamic Tailwater)
↑—**1=3 - 36" RCP Culverts** (Inlet Controls 206.38 cfs @ 9.73 fps)

Secondary OutFlow Max=95.31 cfs @ 11.94 hrs HW=454.09' (Free Discharge)
↑—**2=Broad-Crested Rectangular Weir** (Weir Controls 95.31 cfs @ 2.55 fps)

Summary for Pond CV-8: 30" HDPE, CV-8

[57] Hint: Peaked at 461.77' (Flood elevation advised)

Inflow Area =	2.180 ac,100.00% Impervious,	Inflow Depth =	6.00"	for 25-year adjusted event	
Inflow =	20.06 cfs @	11.94 hrs, Volume=	1.090 af		
Outflow =	20.06 cfs @	11.94 hrs, Volume=	1.090 af,	Atten= 0%,	Lag= 0.0 min
Primary =	20.06 cfs @	11.94 hrs, Volume=	1.090 af		

Routing by Dyn-Stor-Ind method, Time Span= 0.00-120.00 hrs, dt= 0.01 hrs
Peak Elev= 461.77' @ 11.95 hrs

Device	Routing	Invert	Outlet Devices
#1	Primary	453.70'	**30.0" Round Culvert** L= 50.0' Ke= 0.900 Inlet / Outlet Invert= 453.70' / 453.50' S= 0.0040 '/' Cc= 0.900 n= 0.012, Flow Area= 4.91 sf

Primary OutFlow Max=19.90 cfs @ 11.94 hrs HW=461.76' TW=460.62' (Dynamic Tailwater)
↑—**1=Culvert** (Inlet Controls 19.90 cfs @ 4.05 fps)

Summary for Pond CV-9: Proposed Detention Pond (at former leachate pond), CV-9

Inflow Area =	63.080 ac, 55.31% Impervious,	Inflow Depth =	5.01"	for 25-year adjusted event	
Inflow =	275.65 cfs @	11.93 hrs, Volume=	26.313 af		
Outflow =	24.09 cfs @	13.23 hrs, Volume=	25.926 af,	Atten= 91%,	Lag= 78.2 min
Primary =	24.09 cfs @	13.23 hrs, Volume=	25.926 af		
Secondary =	0.00 cfs @	0.00 hrs, Volume=	0.000 af		

Routing by Dyn-Stor-Ind method, Time Span= 0.00-120.00 hrs, dt= 0.01 hrs
Peak Elev= 444.54' @ 13.23 hrs Surf.Area= 4.655 ac Storage= 15.687 af

Plug-Flow detention time= 554.6 min calculated for 25.924 af (99% of inflow)
Center-of-Mass det. time= 545.1 min (1,301.8 - 756.6)

Volume	Invert	Avail.Storage	Storage Description
#1	441.00'	43.047 af	**350.00'W x 525.00'L x 9.00'H Prismatoid Z=3.0**

Device	Routing	Invert	Outlet Devices
#1	Primary	441.00'	**24.0" Round Culvert** L= 65.5' Ke= 0.500 Inlet / Outlet Invert= 441.00' / 440.50' S= 0.0076 '/' Cc= 0.900 n= 0.012, Flow Area= 3.14 sf
#2	Secondary	449.00'	**20.0' long x 16.0' breadth Broad-Crested Rectangular Weir** Head (feet) 0.20 0.40 0.60 0.80 1.00 1.20 1.40 1.60

Coef. (English) 2.68 2.70 2.70 2.64 2.63 2.64 2.64 2.63

Primary OutFlow Max=24.09 cfs @ 13.23 hrs HW=444.54' TW=441.38' (Dynamic Tailwater)
↑—**1=Culvert** (Inlet Controls 24.09 cfs @ 7.67 fps)

Secondary OutFlow Max=0.00 cfs @ 0.00 hrs HW=441.00' TW=440.50' (Dynamic Tailwater)
↑—**2=Broad-Crested Rectangular Weir** (Controls 0.00 cfs)

Pond CV-9: Proposed Detention Pond (at former leachate pond), CV-9

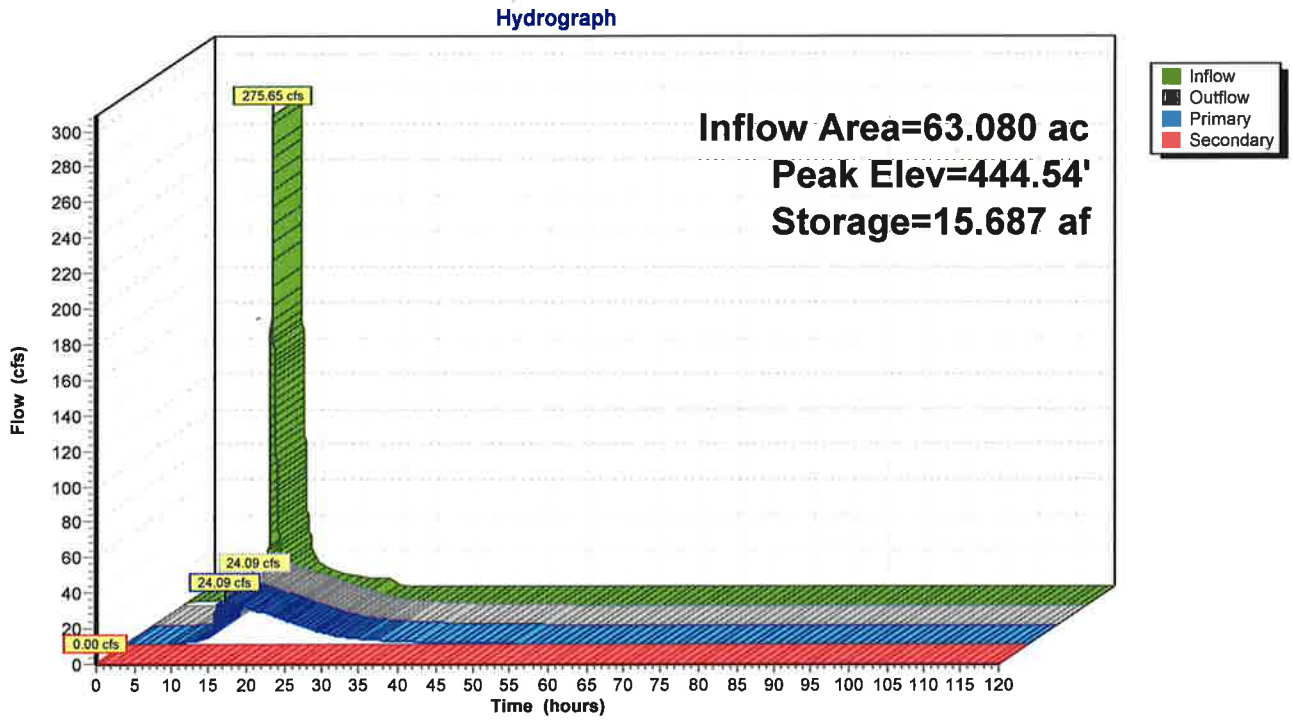

Hydrograph for Pond CV-9: Proposed Detention Pond (at former leachate pond), CV-9

Time (hours)	Inflow (cfs)	Storage (acre-feet)	Elevation (feet)	Outflow (cfs)	Primary (cfs)	Secondary (cfs)
0.00	0.00	0.000	441.00	0.00	0.00	**0.00**
5.00	3.40	1.030	441.24	0.34	0.34	0.00
10.00	**10.69**	**2.965**	**441.70**	**2.55**	**2.55**	0.00
15.00	**11.52**	**14.518**	**444.29**	**22.73**	**22.73**	0.00
20.00	4.98	9.628	443.21	16.08	16.08	0.00
25.00	0.08	6.138	442.43	8.64	8.64	0.00
30.00	0.00	3.734	441.87	3.82	3.82	0.00
35.00	0.00	2.588	441.61	1.99	1.99	0.00
40.00	0.00	1.952	441.46	1.18	1.18	0.00
45.00	0.00	1.558	441.37	0.77	0.77	0.00
50.00	0.00	1.292	441.31	0.53	0.53	0.00
55.00	0.00	1.103	441.26	0.39	0.39	0.00
60.00	0.00	0.962	441.23	0.30	0.30	0.00
65.00	0.00	0.854	441.20	0.23	0.23	0.00
70.00	0.00	0.767	441.18	0.19	0.19	0.00
75.00	0.00	0.697	441.16	0.15	0.15	0.00
80.00	0.00	0.639	441.15	0.13	0.13	0.00
85.00	0.00	0.590	441.14	0.11	0.11	0.00
90.00	0.00	0.548	441.13	0.09	0.09	0.00
95.00	0.00	0.512	441.12	0.08	0.08	0.00
100.00	0.00	0.481	441.11	0.07	0.07	0.00
105.00	0.00	0.453	441.11	0.06	0.06	0.00
110.00	0.00	0.428	441.10	0.06	0.06	0.00
115.00	0.00	0.407	441.10	0.05	0.05	0.00
120.00	0.00	0.387	441.09	0.05	0.05	0.00

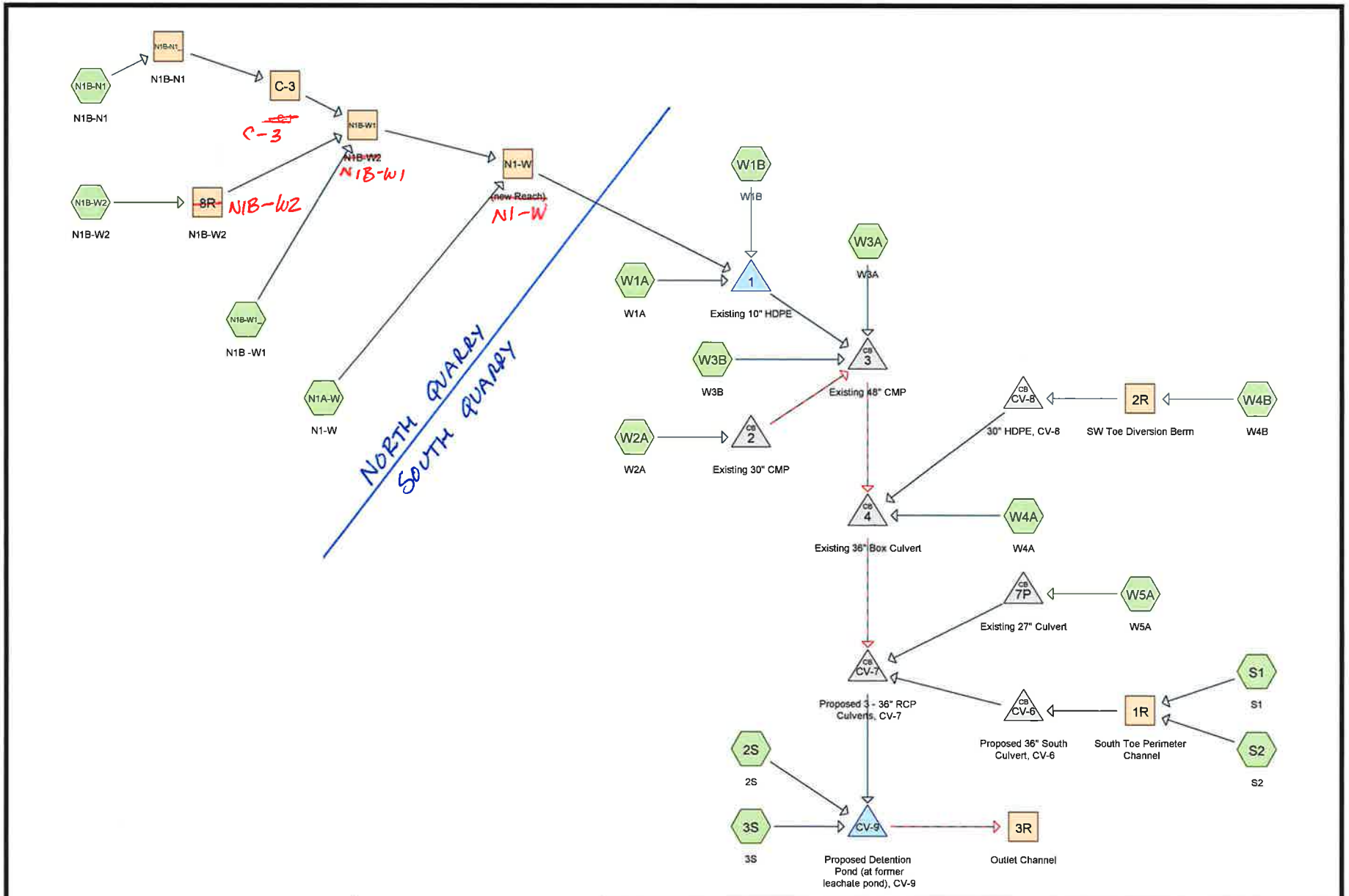

Routing Diagram for WSW Stormwater Model SW basin 3-36 inch @ weir el 453_15 w_NQCap twin 24

Prepared by Cornerstone, Printed 10/1/2013

HydroCAD® 10.00 s/n 04282 © 2011 HydroCAD Software Solutions LLC

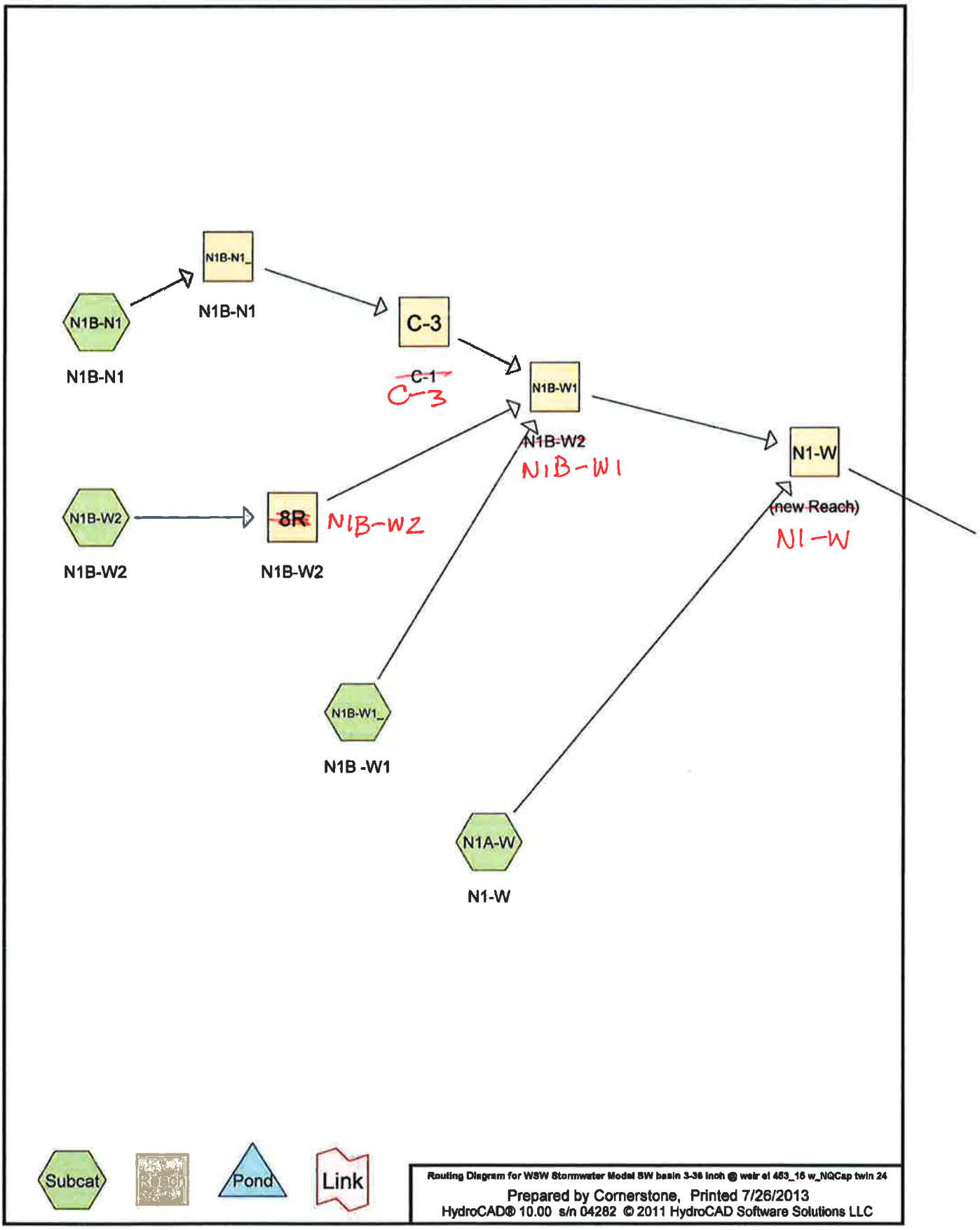
N1B-N1_
N1B-N1
N1B-N1
N1B-N1
C-3
C-1
C-3
N1B-W1
N1B-W2
N1B-W1
N1-W
(new Reach)
N1-W
N1B-W2
N1B-W2
8R
N1B-W2
N1B-W1_
N1B -W1
N1A-W
N1-W
Subcat
Reach
Pond
Link
Routing Diagram for WSW Stormwater Model SW basin 3-36 inch @ weir el 463_16 w_NQCap twin 24
Prepared by Cornerstone, Printed 7/26/2013
HydroCAD® 10.00 s/n 04282 © 2011 HydroCAD Software Solutions LLC

Area Listing (all nodes)

Area (acres)	CN	Description (subcatchment-numbers)
1.930	74	(W4A)
4.420	74	<50% Grass cover, Poor, HSG B (W3B)
1.220	84	(S2)
18.290	86	<50% Grass cover, Poor, HSG B (W1A, W2A)
1.850	87	Dirt roads, HSG C (W5A)
0.480	90	(2S)
33.040	100	(3S, N1B-N1, N1B-W1_, N1B-W2, S1, W1B, W3A, W4B)
1.850	100	North Quarry Cap (N1A-W)
63.080	**93**	**TOTAL AREA**

Soil Listing (all nodes)

Area (acres)	Soil Group	Subcatchment Numbers
0.000	HSG A	
22.710	HSG B	W1A, W2A, W3B
1.850	HSG C	W5A
0.000	HSG D	
38.520	Other	2S, 3S, N1A-W, N1B-N1, N1B-W1_, N1B-W2, S1, S2, W1B, W3A, W4A, W4B
63.080		**TOTAL AREA**

Ground Covers (all nodes)

HSG-A (acres)	HSG-B (acres)	HSG-C (acres)	HSG-D (acres)	Other (acres)	Total (acres)	Ground Cover	Subcatchment Numbers
0.000	0.000	0.000	0.000	36.670	36.670		2S, 3S, N1B-N1, N1B-W1_, N1B-W2, S1, S2, W1B, W3A, W4A, W4B
0.000	22.710	0.000	0.000	0.000	22.710	<50% Grass cover, Poor	W1A, W2A, W3B
0.000	0.000	0.000	0.000	1.850	1.850	North Quarry Cap	N1A-W
0.000	0.000	1.850	0.000	0.000	1.850	Dirt roads	W5A
0.000	**22.710**	**1.850**	**0.000**	**38.520**	**63.080**	**TOTAL AREA**	

Pipe Listing (all nodes)

Line#	Node Number	In-Invert (feet)	Out-Invert (feet)	Length (feet)	Slope (ft/ft)	n	Diam/Width (inches)	Height (inches)	Inside-Fill (inches)
1	C-3	0.00	-0.30	30.0	0.0100	0.012	18.0	0.0	0.0
2	2	454.52	454.44	27.0	0.0030	0.020	30.0	0.0	0.0
3	3	451.68	451.48	50.0	0.0040	0.020	48.0	0.0	0.0
4	4	450.42	450.17	12.0	0.0208	0.020	36.0	36.0	0.0
5	7P	450.19	450.50	127.0	-0.0024	0.025	27.0	0.0	0.0
6	CV-6	456.60	449.20	400.0	0.0185	0.012	24.0	0.0	0.0
7	CV-6	456.60	449.20	400.0	0.0185	0.012	24.0	0.0	0.0
8	CV-7	448.50	448.10	50.0	0.0080	0.011	36.0	0.0	0.0
9	CV-8	453.70	453.50	50.0	0.0040	0.012	30.0	0.0	0.0
10	CV-9	441.00	440.50	65.5	0.0076	0.012	24.0	0.0	0.0

Time span=0.00-120.00 hrs, dt=0.01 hrs, 12001 points
Runoff by SCS TR-20 method, UH=SCS
Reach routing by Dyn-Stor-Ind method - Pond routing by Dyn-Stor-Ind method

Subcatchment 2S: 2S Runoff Area=0.480 ac 0.00% Impervious Runoff Depth=4.85"
Tc=2.0 min CN=90 Runoff=4.33 cfs 0.194 af

Subcatchment 3S: 3S Runoff Area=6.790 ac 100.00% Impervious Runoff Depth=6.00"
Tc=2.0 min CN=100 Runoff=65.90 cfs 3.395 af

Subcatchment N1A-W: N1-W Runoff Area=1.850 ac 100.00% Impervious Runoff Depth=6.00"
Flow Length=300' Tc=1.5 min CN=100 Runoff=18.23 cfs 0.925 af

Subcatchment N1B-N1: N1B-N1 Runoff Area=0.860 ac 100.00% Impervious Runoff Depth=6.00"
Tc=1.0 min CN=100 Runoff=8.59 cfs 0.430 af

Subcatchment N1B-W1_: N1B -W1 Runoff Area=2.520 ac 100.00% Impervious Runoff Depth=6.00"
Tc=1.0 min CN=100 Runoff=25.16 cfs 1.260 af

Subcatchment N1B-W2: N1B-W2 Runoff Area=0.930 ac 100.00% Impervious Runoff Depth=6.00"
Tc=1.0 min CN=100 Runoff=9.29 cfs 0.465 af

Subcatchment S1: S1 Runoff Area=5.440 ac 100.00% Impervious Runoff Depth=6.00"
Flow Length=325' Slope=0.2400 '/' Tc=1.1 min CN=100 Runoff=54.11 cfs 2.720 af

Subcatchment S2: S2 Runoff Area=1.220 ac 0.00% Impervious Runoff Depth=4.20"
Flow Length=630' Tc=8.5 min CN=84 Runoff=8.06 cfs 0.427 af

Subcatchment W1A: W1A Runoff Area=8.780 ac 0.00% Impervious Runoff Depth=4.41"
Flow Length=1,200' Slope=0.0190 '/' Tc=38.5 min CN=86 Runoff=28.10 cfs 3.226 af

Subcatchment W1B: W1B Runoff Area=7.910 ac 100.00% Impervious Runoff Depth=6.00"
Flow Length=882' Tc=4.7 min CN=100 Runoff=70.74 cfs 3.955 af

Subcatchment W2A: W2A Runoff Area=9.510 ac 0.00% Impervious Runoff Depth=4.41"
Flow Length=823' Tc=21.8 min CN=86 Runoff=43.61 cfs 3.494 af

Subcatchment W3A: W3A Runoff Area=6.410 ac 100.00% Impervious Runoff Depth=6.00"
Flow Length=1,085' Tc=2.9 min CN=100 Runoff=60.60 cfs 3.205 af

Subcatchment W3B: W3B Runoff Area=4.420 ac 0.00% Impervious Runoff Depth=3.18"
Flow Length=817' Tc=24.5 min CN=74 Runoff=13.90 cfs 1.173 af

Subcatchment W4A: W4A Runoff Area=1.930 ac 0.00% Impervious Runoff Depth=3.18"
Flow Length=400' Slope=0.0900 '/' Tc=13.2 min CN=74 Runoff=8.46 cfs 0.512 af

Subcatchment W4B: W4B Runoff Area=2.180 ac 100.00% Impervious Runoff Depth=6.00"
Flow Length=658' Tc=2.8 min CN=100 Runoff=20.67 cfs 1.090 af

Subcatchment W5A: W5A Runoff Area=1.850 ac 0.00% Impervious Runoff Depth=4.52"
Tc=18.8 min CN=87 Runoff=9.37 cfs 0.696 af

Reach 1R: South Toe Perimeter Avg. Flow Depth=1.28' Max Vel=14.22 fps Inflow=59.75 cfs 3.147 af
n=0.013 L=730.0' S=0.0321 '/' Capacity=191.19 cfs Outflow=58.55 cfs 3.147 af

Reach 2R: SW Toe Diversion Berm Avg. Flow Depth=1.60' Max Vel=3.15 fps Inflow=20.67 cfs 1.090 af
n=0.012 L=260.0' S=0.0010 '/' Capacity=36.58 cfs Outflow=20.06 cfs 1.090 af

Reach 3R: Outlet Channel Avg. Flow Depth=0.88' Max Vel=2.69 fps Inflow=24.09 cfs 25.926 af
n=0.030 L=65.5' S=0.0061 '/' Capacity=76.66 cfs Outflow=24.09 cfs 25.926 af

N1B-W2
Reach 8R: N1B-W2 Avg. Flow Depth=0.90' Max Vel=2.58 fps Inflow=9.29 cfs 0.465 af
n=0.030 L=180.0' S=0.0050 '/' Capacity=10.90 cfs Outflow=9.00 cfs 0.465 af

C-3
Reach C-3: ~~C-1~~ Avg. Flow Depth=0.97' Max Vel=7.06 fps Inflow=8.52 cfs 0.430 af
18.0" Round Pipe n=0.012 L=30.0' S=0.0100 '/' Capacity=11.38 cfs Outflow=8.54 cfs 0.430 af

N1-W
Reach N1-W: (~~new Reach~~) Avg. Flow Depth=1.92' Max Vel=3.15 fps Inflow=55.88 cfs 3.080 af
n=0.030 L=350.0' S=0.0030 '/' Capacity=57.90 cfs Outflow=53.40 cfs 3.080 af

Reach N1B-N1_: N1B-N1 Avg. Flow Depth=0.41' Max Vel=11.03 fps Inflow=8.59 cfs 0.430 af
n=0.012 L=180.0' S=0.0670 '/' Capacity=263.58 cfs Outflow=8.52 cfs 0.430 af

N1B-W1
Reach N1B-W1: ~~N1B-W2~~ Avg. Flow Depth=1.87' Max Vel=2.63 fps Inflow=42.51 cfs 2.155 af
n=0.030 L=480.0' S=0.0021 '/' Capacity=43.53 cfs Outflow=38.31 cfs 2.155 af

Pond 1: Existing 10" HDPE Inflow=131.93 cfs 10.261 af
Primary=131.93 cfs 10.261 af

Pond 2: Existing 30" CMP Peak Elev=460.73' Inflow=43.61 cfs 3.494 af
Primary=30.38 cfs 2.772 af Secondary=31.93 cfs 0.722 af Outflow=43.61 cfs 3.494 af

Pond 3: Existing 48" CMP Peak Elev=460.73' Inflow=217.32 cfs 18.134 af
Primary=81.63 cfs 13.480 af Secondary=197.63 cfs 4.654 af Outflow=217.32 cfs 18.134 af

Pond 4: Existing 36" Box Culvert Peak Elev=460.62' Inflow=242.90 cfs 19.736 af
Primary=119.11 cfs 18.199 af Secondary=132.11 cfs 1.537 af Outflow=242.90 cfs 19.736 af

Pond 7P: Existing 27" Culvert Peak Elev=454.28' Inflow=9.37 cfs 0.696 af
Primary=9.37 cfs 0.696 af Secondary=0.00 cfs 0.000 af Outflow=9.37 cfs 0.696 af

Pond CV-6: Proposed 36" South Culvert, CV-6 Peak Elev=461.71' Inflow=58.55 cfs 3.147 af
Primary=58.55 cfs 3.147 af Secondary=0.00 cfs 0.000 af Outflow=58.55 cfs 3.147 af

Pond CV-7: Proposed 3 - 36" RCP Culverts, CV-7 Peak Elev=454.09' Inflow=301.78 cfs 23.579 af
Primary=206.39 cfs 22.724 af Secondary=95.39 cfs 0.855 af Outflow=301.78 cfs 23.579 af

Pond CV-8: 30" HDPE, CV-8 Peak Elev=461.77' Inflow=20.06 cfs 1.090 af
30.0" Round Culvert n=0.012 L=50.0' S=0.0040 '/' Outflow=20.06 cfs 1.090 af

Pond CV-9: Proposed Detention Pond Peak Elev=444.54' Storage=15.687 af Inflow=275.65 cfs 26.313 af
Primary=24.09 cfs 25.926 af Secondary=0.00 cfs 0.000 af Outflow=24.09 cfs 25.926 af

Total Runoff Area = 63.080 ac Runoff Volume = 27.168 af Average Runoff Depth = 5.17"
44.69% Pervious = 28.190 ac 55.31% Impervious = 34.890 ac

Summary for Subcatchment 2S: 2S

Runoff = 4.33 cfs @ 11.92 hrs, Volume= 0.194 af, Depth= 4.85"

Runoff by SCS TR-20 method, UH=SCS, Time Span= 0.00-120.00 hrs, dt= 0.01 hrs
Type II 24-hr 25-year adjusted Rainfall=6.00"

	Area (ac)	CN	Description
*	0.480	90	
	0.480		100.00% Pervious Area

Tc (min)	Length (feet)	Slope (ft/ft)	Velocity (ft/sec)	Capacity (cfs)	Description
2.0					**Direct Entry,**

Summary for Subcatchment 3S: 3S

Runoff = 65.90 cfs @ 11.92 hrs, Volume= 3.395 af, Depth= 6.00"

Runoff by SCS TR-20 method, UH=SCS, Time Span= 0.00-120.00 hrs, dt= 0.01 hrs
Type II 24-hr 25-year adjusted Rainfall=6.00"

	Area (ac)	CN	Description
*	6.790	100	
	6.790		100.00% Impervious Area

Tc (min)	Length (feet)	Slope (ft/ft)	Velocity (ft/sec)	Capacity (cfs)	Description
2.0					**Direct Entry,**

Summary for Subcatchment N1A-W: N1-W

Runoff = 18.23 cfs @ 11.92 hrs, Volume= 0.925 af, Depth= 6.00"

Runoff by SCS TR-20 method, UH=SCS, Time Span= 0.00-120.00 hrs, dt= 0.01 hrs
Type II 24-hr 25-year adjusted Rainfall=6.00"

	Area (ac)	CN	Description
*	1.850	100	North Quarry Cap
	1.850		100.00% Impervious Area

Tc (min)	Length (feet)	Slope (ft/ft)	Velocity (ft/sec)	Capacity (cfs)	Description
0.9	130	0.0600	2.35		**Sheet Flow,** Smooth surfaces n= 0.011 P2= 3.50"
0.6	170	0.2700	4.53		**Sheet Flow,** Smooth surfaces n= 0.011 P2= 3.50"
1.5	300	Total			

Summary for Subcatchment N1B-N1: N1B-N1

[49] Hint: Tc<2dt may require smaller dt

Runoff = 8.59 cfs @ 11.91 hrs, Volume= 0.430 af, Depth= 6.00"

Runoff by SCS TR-20 method, UH=SCS, Time Span= 0.00-120.00 hrs, dt= 0.01 hrs
Type II 24-hr 25-year adjusted Rainfall=6.00"

	Area (ac)	CN	Description
*	0.860	100	
	0.860		100.00% Impervious Area

Tc (min)	Length (feet)	Slope (ft/ft)	Velocity (ft/sec)	Capacity (cfs)	Description
1.0					**Direct Entry,**

Summary for Subcatchment N1B-W1_: N1B -W1

[49] Hint: Tc<2dt may require smaller dt

Runoff = 25.16 cfs @ 11.91 hrs, Volume= 1.260 af, Depth= 6.00"

Runoff by SCS TR-20 method, UH=SCS, Time Span= 0.00-120.00 hrs, dt= 0.01 hrs
Type II 24-hr 25-year adjusted Rainfall=6.00"

	Area (ac)	CN	Description
*	2.520	100	
	2.520		100.00% Impervious Area

Tc (min)	Length (feet)	Slope (ft/ft)	Velocity (ft/sec)	Capacity (cfs)	Description
1.0					**Direct Entry,**

Summary for Subcatchment N1B-W2: N1B-W2

[49] Hint: Tc<2dt may require smaller dt

Runoff = 9.29 cfs @ 11.91 hrs, Volume= 0.465 af, Depth= 6.00"

Runoff by SCS TR-20 method, UH=SCS, Time Span= 0.00-120.00 hrs, dt= 0.01 hrs
Type II 24-hr 25-year adjusted Rainfall=6.00"

	Area (ac)	CN	Description
*	0.930	100	
	0.930		100.00% Impervious Area

Tc (min)	Length (feet)	Slope (ft/ft)	Velocity (ft/sec)	Capacity (cfs)	Description
1.0					**Direct Entry,**

Summary for Subcatchment S1: S1

[49] Hint: Tc<2dt may require smaller dt

Runoff = 54.11 cfs @ 11.91 hrs, Volume= 2.720 af, Depth= 6.00"

Runoff by SCS TR-20 method, UH=SCS, Time Span= 0.00-120.00 hrs, dt= 0.01 hrs
Type II 24-hr 25-year adjusted Rainfall=6.00"

	Area (ac)	CN	Description
*	5.440	100	
	5.440		100.00% Impervious Area

Tc (min)	Length (feet)	Slope (ft/ft)	Velocity (ft/sec)	Capacity (cfs)	Description
1.1	300	0.2400	4.52		**Sheet Flow,** n= 0.012 P2= 3.50"
0.0	25	0.2400	9.94		**Shallow Concentrated Flow,** Paved Kv= 20.3 fps
1.1	325	Total			

Summary for Subcatchment S2: S2

Runoff = 8.06 cfs @ 12.00 hrs, Volume= 0.427 af, Depth= 4.20"

Runoff by SCS TR-20 method, UH=SCS, Time Span= 0.00-120.00 hrs, dt= 0.01 hrs
Type II 24-hr 25-year adjusted Rainfall=6.00"

	Area (ac)	CN	Description
*	1.220	84	
	1.220		100.00% Pervious Area

Tc (min)	Length (feet)	Slope (ft/ft)	Velocity (ft/sec)	Capacity (cfs)	Description
1.4	30	0.2000	0.35		**Sheet Flow, sheet flow** Grass: Short n= 0.150 P2= 3.50"
7.1	600	0.0200	1.41		**Shallow Concentrated Flow, shallow concentrated** Nearly Bare & Untilled Kv= 10.0 fps
8.5	630	Total			

Summary for Subcatchment W1A: W1A

Runoff = 28.10 cfs @ 12.33 hrs, Volume= 3.226 af, Depth= 4.41"

Runoff by SCS TR-20 method, UH=SCS, Time Span= 0.00-120.00 hrs, dt= 0.01 hrs
Type II 24-hr 25-year adjusted Rainfall=6.00"

	Area (ac)	CN	Description
*	8.780	86	<50% Grass cover, Poor, HSG B
	8.780		100.00% Pervious Area

Tc (min)	Length (feet)	Slope (ft/ft)	Velocity (ft/sec)	Capacity (cfs)	Description
23.0	300	0.0190	0.22		**Sheet Flow, Sheet Flow** Grass: Short n= 0.150 P2= 3.50"
15.5	900	0.0190	0.96		**Shallow Concentrated Flow,** Short Grass Pasture Kv= 7.0 fps
38.5	1,200	Total			

Summary for Subcatchment W1B: W1B

Runoff = 70.74 cfs @ 11.95 hrs, Volume= 3.955 af, Depth= 6.00"

Runoff by SCS TR-20 method, UH=SCS, Time Span= 0.00-120.00 hrs, dt= 0.01 hrs
Type II 24-hr 25-year adjusted Rainfall=6.00"

	Area (ac)	CN	Description
*	7.910	100	
	7.910		100.00% Impervious Area

Tc (min)	Length (feet)	Slope (ft/ft)	Velocity (ft/sec)	Capacity (cfs)	Description
3.0	283	0.0180	1.58		**Sheet Flow,** n= 0.012 P2= 3.50"
0.2	17	0.0440	1.29		**Sheet Flow,** n= 0.012 P2= 3.50"
0.1	28	0.0440	4.26		**Shallow Concentrated Flow,** Paved Kv= 20.3 fps
0.4	122	0.0570	4.85		**Shallow Concentrated Flow,** Paved Kv= 20.3 fps
0.4	249	0.2450	10.05		**Shallow Concentrated Flow,** Paved Kv= 20.3 fps
0.6	183	0.0550	4.76		**Shallow Concentrated Flow,** Paved Kv= 20.3 fps
4.7	882	Total			

Summary for Subcatchment W2A: W2A

Runoff = 43.61 cfs @ 12.14 hrs, Volume= 3.494 af, Depth= 4.41"

Runoff by SCS TR-20 method, UH=SCS, Time Span= 0.00-120.00 hrs, dt= 0.01 hrs
Type II 24-hr 25-year adjusted Rainfall=6.00"

Area (ac)	CN	Description
* 9.510	86	<50% Grass cover, Poor, HSG B
9.510		100.00% Pervious Area

Tc (min)	Length (feet)	Slope (ft/ft)	Velocity (ft/sec)	Capacity (cfs)	Description
9.2	156	0.0510	0.28		**Sheet Flow,** Grass: Short n= 0.150 P2= 3.50"
8.6	144	0.0520	0.28		**Sheet Flow,** Grass: Short n= 0.150 P2= 3.50"
0.9	88	0.0520	1.60		**Shallow Concentrated Flow,** Short Grass Pasture Kv= 7.0 fps
1.2	249	0.2450	3.46		**Shallow Concentrated Flow,** Short Grass Pasture Kv= 7.0 fps
1.9	186	0.0540	1.63		**Shallow Concentrated Flow,** Short Grass Pasture Kv= 7.0 fps
21.8	823	Total			

Summary for Subcatchment W3A: W3A

Runoff = 60.60 cfs @ 11.93 hrs, Volume= 3.205 af, Depth= 6.00"

Runoff by SCS TR-20 method, UH=SCS, Time Span= 0.00-120.00 hrs, dt= 0.01 hrs
Type II 24-hr 25-year adjusted Rainfall=6.00"

Area (ac)	CN	Description
* 6.410	100	
6.410		100.00% Impervious Area

Tc (min)	Length (feet)	Slope (ft/ft)	Velocity (ft/sec)	Capacity (cfs)	Description
1.1	200	0.1000	3.15		**Sheet Flow,** Smooth surfaces n= 0.011 P2= 3.50"
1.5	585	0.1000	6.42		**Shallow Concentrated Flow,** Paved Kv= 20.3 fps
0.3	300	0.0060	16.91	2,789.97	**Channel Flow,** Area= 165.0 sf Perim= 28.4' r= 5.81' n= 0.022 Earth, clean & straight
2.9	1,085	Total			

Summary for Subcatchment W3B: W3B

Runoff = 13.90 cfs @ 12.17 hrs, Volume= 1.173 af, Depth= 3.18"

Runoff by SCS TR-20 method, UH=SCS, Time Span= 0.00-120.00 hrs, dt= 0.01 hrs
Type II 24-hr 25-year adjusted Rainfall=6.00"

	Area (ac)	CN	Description
*	4.420	74	<50% Grass cover, Poor, HSG B
	4.420		100.00% Pervious Area

Tc (min)	Length (feet)	Slope (ft/ft)	Velocity (ft/sec)	Capacity (cfs)	Description
19.7	300	0.0280	0.25		**Sheet Flow,** Grass: Short n= 0.150 P2= 3.50"
3.0	209	0.0280	1.17		**Shallow Concentrated Flow,** Short Grass Pasture Kv= 7.0 fps
1.6	206	0.0970	2.18		**Shallow Concentrated Flow,** Short Grass Pasture Kv= 7.0 fps
0.2	102	0.0030	8.41	1,009.44	**Channel Flow,** Area= 120.0 sf Perim= 35.0' r= 3.43' n= 0.022 Earth, clean & straight
24.5	817	Total			

Summary for Subcatchment W4A: W4A

Runoff = 8.46 cfs @ 12.05 hrs, Volume= 0.512 af, Depth= 3.18"

Runoff by SCS TR-20 method, UH=SCS, Time Span= 0.00-120.00 hrs, dt= 0.01 hrs
Type II 24-hr 25-year adjusted Rainfall=6.00"

	Area (ac)	CN	Description
*	1.930	74	
	1.930		100.00% Pervious Area

Tc (min)	Length (feet)	Slope (ft/ft)	Velocity (ft/sec)	Capacity (cfs)	Description
12.4	300	0.0900	0.40		**Sheet Flow,** Grass: Short n= 0.150 P2= 3.50"
0.8	100	0.0900	2.10		**Shallow Concentrated Flow,** Short Grass Pasture Kv= 7.0 fps
13.2	400	Total			

Summary for Subcatchment W4B: W4B

Runoff = 20.67 cfs @ 11.93 hrs, Volume= 1.090 af, Depth= 6.00"

Runoff by SCS TR-20 method, UH=SCS, Time Span= 0.00-120.00 hrs, dt= 0.01 hrs
Type II 24-hr 25-year adjusted Rainfall=6.00"

Area (ac)	CN	Description
* 2.180	100	
2.180		100.00% Impervious Area

Tc (min)	Length (feet)	Slope (ft/ft)	Velocity (ft/sec)	Capacity (cfs)	Description
2.1	288	0.0450	2.29		**Sheet Flow,** n= 0.012 P2= 3.50"
0.1	12	0.2220	2.30		**Sheet Flow,** n= 0.012 P2= 3.50"
0.6	358	0.2220	9.56		**Shallow Concentrated Flow,** Paved Kv= 20.3 fps
2.8	658	Total			

Summary for Subcatchment W5A: W5A

Runoff = 9.37 cfs @ 12.10 hrs, Volume= 0.696 af, Depth= 4.52"

Runoff by SCS TR-20 method, UH=SCS, Time Span= 0.00-120.00 hrs, dt= 0.01 hrs
Type II 24-hr 25-year adjusted Rainfall=6.00"

Area (ac)	CN	Description
1.850	87	Dirt roads, HSG C
1.850		100.00% Pervious Area

Tc (min)	Length (feet)	Slope (ft/ft)	Velocity (ft/sec)	Capacity (cfs)	Description
18.8					**Direct Entry,**

Summary for Reach 1R: South Toe Perimeter Channel

Inflow Area = 6.660 ac, 81.68% Impervious, Inflow Depth = 5.67" for 25-year adjusted event
Inflow = 59.75 cfs @ 11.91 hrs, Volume= 3.147 af
Outflow = 58.55 cfs @ 11.92 hrs, Volume= 3.147 af, Atten= 2%, Lag= 0.5 min

Routing by Dyn-Stor-Ind method, Time Span= 0.00-120.00 hrs, dt= 0.01 hrs
Max. Velocity= 14.22 fps, Min. Travel Time= 0.9 min
Avg. Velocity = 4.86 fps, Avg. Travel Time= 2.5 min

Peak Storage= 3,005 cf @ 11.92 hrs
Average Depth at Peak Storage= 1.28'
Bank-Full Depth= 2.00' Flow Area= 10.0 sf, Capacity= 191.19 cfs

0.00' x 2.00' deep channel, n= 0.013 Corrugated PE, smooth interior
Side Slope Z-value= 1.0 4.0 '/' Top Width= 10.00'
Length= 730.0' Slope= 0.0321 '/'
Inlet Invert= 480.00', Outlet Invert= 456.60'

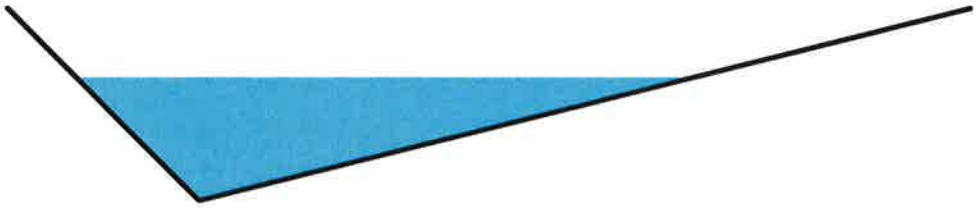

Summary for Reach 2R: SW Toe Diversion Berm

[65] Warning: Inlet elevation not specified

Inflow Area = 2.180 ac,100.00% Impervious, Inflow Depth = 6.00" for 25-year adjusted event
Inflow = 20.67 cfs @ 11.93 hrs, Volume= 1.090 af
Outflow = 20.06 cfs @ 11.94 hrs, Volume= 1.090 af, Atten= 3%, Lag= 0.8 min

Routing by Dyn-Stor-Ind method, Time Span= 0.00-120.00 hrs, dt= 0.01 hrs
Max. Velocity= 3.15 fps, Min. Travel Time= 1.4 min
Avg. Velocity = 1.05 fps, Avg. Travel Time= 4.1 min

Peak Storage= 1,656 cf @ 11.94 hrs
Average Depth at Peak Storage= 1.60'
Bank-Full Depth= 2.00' Flow Area= 10.0 sf, Capacity= 36.58 cfs

0.00' x 2.00' deep channel, n= 0.012
Side Slope Z-value= 1.0 4.0 '/' Top Width= 10.00'
Length= 260.0' Slope= 0.0010 '/'
Inlet Invert= 0.00', Outlet Invert= -0.26'



Summary for Reach 3R: Outlet Channel

Inflow Area = 63.080 ac, 55.31% Impervious, Inflow Depth > 4.93" for 25-year adjusted event
Inflow = 24.09 cfs @ 13.23 hrs, Volume= 25.926 af
Outflow = 24.09 cfs @ 13.23 hrs, Volume= 25.926 af, Atten= 0%, Lag= 0.3 min

Routing by Dyn-Stor-Ind method, Time Span= 0.00-120.00 hrs, dt= 0.01 hrs
Max. Velocity= 2.69 fps, Min. Travel Time= 0.4 min
Avg. Velocity = 0.93 fps, Avg. Travel Time= 1.2 min

Peak Storage= 586 cf @ 13.23 hrs
Average Depth at Peak Storage= 0.88'
Bank-Full Depth= 1.50' Flow Area= 20.0 sf, Capacity= 76.66 cfs

20.00' x 1.50' deep Parabolic Channel, n= 0.030 Grassed
Length= 65.5' Slope= 0.0061 '/'
Inlet Invert= 440.50', Outlet Invert= 440.10'

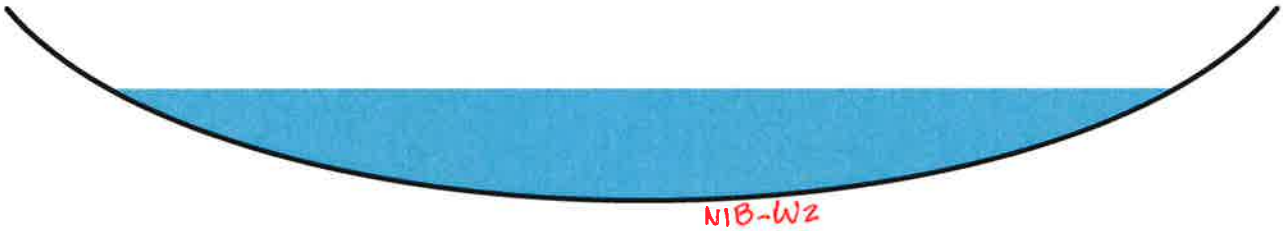

‡

N1B-W2

Summary for Reach ~~8R~~: N1B-W2

[65] Warning: Inlet elevation not specified

Inflow Area = 0.930 ac,100.00% Impervious, Inflow Depth = 6.00" for 25-year adjusted event
Inflow = 9.29 cfs @ 11.91 hrs, Volume= 0.465 af
Outflow = 9.00 cfs @ 11.92 hrs, Volume= 0.465 af, Atten= 3%, Lag= 0.6 min

Routing by Dyn-Stor-Ind method, Time Span= 0.00-120.00 hrs, dt= 0.01 hrs
Max. Velocity= 2.58 fps, Min. Travel Time= 1.2 min
Avg. Velocity = 0.58 fps, Avg. Travel Time= 5.2 min

Peak Storage= 629 cf @ 11.92 hrs
Average Depth at Peak Storage= 0.90'
Bank-Full Depth= 1.00' Flow Area= 4.0 sf, Capacity= 10.90 cfs

3.00' x 1.00' deep channel, n= 0.030
Side Slope Z-value= 1.0 '/' Top Width= 5.00'
Length= 180.0' Slope= 0.0050 '/'
Inlet Invert= 0.00', Outlet Invert= -0.90'



Summary for Reach C-3: ~~C-1~~

[52] Hint: Inlet/Outlet conditions not evaluated
[65] Warning: Inlet elevation not specified
[90] Warning: Qout>Qin may require Finer Routing or smaller dt

Inflow Area = 0.860 ac,100.00% Impervious, Inflow Depth = 6.00" for 25-year adjusted event
Inflow = 8.52 cfs @ 11.91 hrs, Volume= 0.430 af
Outflow = 8.54 cfs @ 11.92 hrs, Volume= 0.430 af, Atten= 0%, Lag= 0.1 min

Routing by Dyn-Stor-Ind method, Time Span= 0.00-120.00 hrs, dt= 0.01 hrs
Max. Velocity= 7.06 fps, Min. Travel Time= 0.1 min
Avg. Velocity = 2.13 fps, Avg. Travel Time= 0.2 min

Peak Storage= 36 cf @ 11.92 hrs
Average Depth at Peak Storage= 0.97'
Bank-Full Depth= 1.50' Flow Area= 1.8 sf, Capacity= 11.38 cfs

18.0" Round Pipe
n= 0.012
Length= 30.0' Slope= 0.0100 '/'
Inlet Invert= 0.00', Outlet Invert= -0.30'

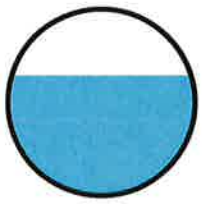

Summary for Reach N1-W: (~~new Reach~~)

[65] Warning: Inlet elevation not specified

Inflow Area = 6.160 ac,100.00% Impervious, Inflow Depth = 6.00" for 25-year adjusted event
Inflow = 55.88 cfs @ 11.92 hrs, Volume= 3.080 af
Outflow = 53.40 cfs @ 11.94 hrs, Volume= 3.080 af, Atten= 4%, Lag= 1.1 min

Routing by Dyn-Stor-Ind method, Time Span= 0.00-120.00 hrs, dt= 0.01 hrs
Max. Velocity= 3.15 fps, Min. Travel Time= 1.9 min
Avg. Velocity = 0.72 fps, Avg. Travel Time= 8.1 min

Peak Storage= 5,939 cf @ 11.94 hrs
Average Depth at Peak Storage= 1.92'
Bank-Full Depth= 2.00' Flow Area= 18.0 sf, Capacity= 57.90 cfs

5.00' x 2.00' deep channel, n= 0.030
Side Slope Z-value= 2.0 '/' Top Width= 13.00'
Length= 350.0' Slope= 0.0030 '/'
Inlet Invert= 0.00', Outlet Invert= -1.05'



Summary for Reach N1B-N1_: N1B-N1

[65] Warning: Inlet elevation not specified

Inflow Area = 0.860 ac,100.00% Impervious, Inflow Depth = 6.00" for 25-year adjusted event
Inflow = 8.59 cfs @ 11.91 hrs, Volume= 0.430 af
Outflow = 8.52 cfs @ 11.91 hrs, Volume= 0.430 af, Atten= 1%, Lag= 0.2 min

Routing by Dyn-Stor-Ind method, Time Span= 0.00-120.00 hrs, dt= 0.01 hrs
Max. Velocity= 11.03 fps, Min. Travel Time= 0.3 min
Avg. Velocity = 3.85 fps, Avg. Travel Time= 0.8 min

Peak Storage= 139 cf @ 11.91 hrs
Average Depth at Peak Storage= 0.41'
Bank-Full Depth= 1.50' Flow Area= 10.1 sf, Capacity= 263.58 cfs

0.00' x 1.50' deep channel, n= 0.012
Side Slope Z-value= 4.0 5.0 '/' Top Width= 13.50'
Length= 180.0' Slope= 0.0670 '/'
Inlet Invert= 0.00', Outlet Invert= -12.06'

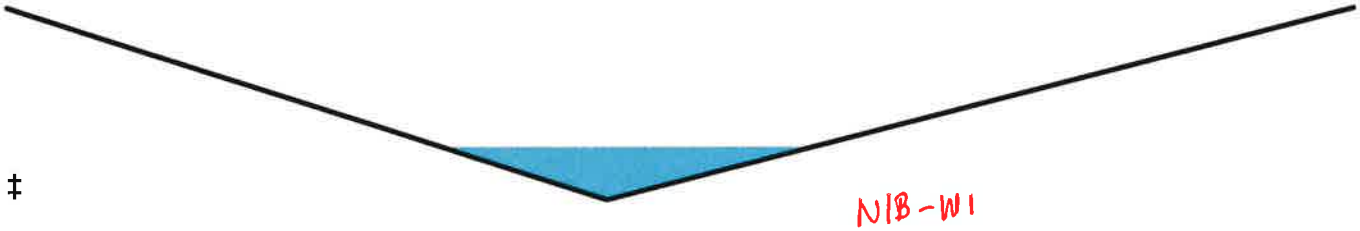

‡

N1B-W1

Summary for Reach N1B-W1: ~~N1B-W2~~

[65] Warning: Inlet elevation not specified

Inflow Area = 4.310 ac,100.00% Impervious, Inflow Depth = 6.00" for 25-year adjusted event
Inflow = 42.51 cfs @ 11.91 hrs, Volume= 2.155 af
Outflow = 38.31 cfs @ 11.93 hrs, Volume= 2.155 af, Atten= 10%, Lag= 1.3 min

Routing by Dyn-Stor-Ind method, Time Span= 0.00-120.00 hrs, dt= 0.01 hrs
Max. Velocity= 2.63 fps, Min. Travel Time= 3.0 min
Avg. Velocity = 0.58 fps, Avg. Travel Time= 13.8 min

Peak Storage= 7,002 cf @ 11.93 hrs
Average Depth at Peak Storage= 1.87'
Bank-Full Depth= 2.00' Flow Area= 16.0 sf, Capacity= 43.53 cfs

5.00' x 2.00' deep channel, n= 0.030
Side Slope Z-value= 1.5 '/' Top Width= 11.00'
Length= 480.0' Slope= 0.0021 '/'
Inlet Invert= 0.00', Outlet Invert= -1.01'



Summary for Pond 1: Existing 10" HDPE

[40] Hint: Not Described (Outflow=Inflow)

Inflow Area = 22.850 ac, 61.58% Impervious, Inflow Depth = 5.39" for 25-year adjusted event
Inflow = 131.93 cfs @ 11.95 hrs, Volume= 10.261 af
Primary = 131.93 cfs @ 11.95 hrs, Volume= 10.261 af, Atten= 0%, Lag= 0.0 min

Routing by Dyn-Stor-Ind method, Time Span= 0.00-120.00 hrs, dt= 0.01 hrs

Summary for Pond 2: Existing 30" CMP

[57] Hint: Peaked at 460.73' (Flood elevation advised)

Inflow Area = 9.510 ac, 0.00% Impervious, Inflow Depth = 4.41" for 25-year adjusted event
Inflow = 43.61 cfs @ 12.14 hrs, Volume= 3.494 af
Outflow = 43.61 cfs @ 12.14 hrs, Volume= 3.494 af, Atten= 0%, Lag= 0.0 min
Primary = 30.38 cfs @ 12.28 hrs, Volume= 2.772 af
Secondary = 31.93 cfs @ 12.09 hrs, Volume= 0.722 af

Routing by Dyn-Stor-Ind method, Time Span= 0.00-120.00 hrs, dt= 0.01 hrs
Peak Elev= 460.73' @ 11.97 hrs

Device	Routing	Invert	Outlet Devices
#1	Primary	454.52'	**30.0" Round Culvert** L= 27.0' Ke= 0.500 Inlet / Outlet Invert= 454.52' / 454.44' S= 0.0030 '/' Cc= 0.900 n= 0.020 Corrugated PE, corrugated interior, Flow Area= 4.91 sf
#2	Secondary	460.00'	**100.0' long x 10.0' breadth Broad-Crested Rectangular Weir** Head (feet) 0.20 0.40 0.60 0.80 1.00 1.20 1.40 1.60 Coef. (English) 2.49 2.56 2.70 2.69 2.68 2.69 2.67 2.64

Primary OutFlow Max=30.80 cfs @ 12.28 hrs HW=460.02' TW=458.32' (Dynamic Tailwater)
↑—**1=Culvert** (Inlet Controls 30.80 cfs @ 6.27 fps)

Secondary OutFlow Max=34.47 cfs @ 12.09 hrs HW=460.28' TW=460.08' (Dynamic Tailwater)
↑—**2=Broad-Crested Rectangular Weir** (Weir Controls 34.47 cfs @ 1.24 fps)

Summary for Pond 3: Existing 48" CMP

[57] Hint: Peaked at 460.73' (Flood elevation advised)
[80] Warning: Exceeded Pond 2 by 0.67' @ 11.82 hrs (19.31 cfs 0.142 af)
[80] Warning: Exceeded Pond 2 by 0.67' @ 11.82 hrs (3.50 cfs 0.416 af)

Inflow Area =	43.190 ac,	47.42% Impervious,	Inflow Depth =	5.04"	for 25-year adjusted event
Inflow =	217.32 cfs @	11.95 hrs,	Volume=	18.134 af	
Outflow =	217.32 cfs @	11.95 hrs,	Volume=	18.134 af,	Atten= 0%, Lag= 0.0 min
Primary =	81.63 cfs @	12.33 hrs,	Volume=	13.480 af	
Secondary =	197.63 cfs @	11.95 hrs,	Volume=	4.654 af	

Routing by Dyn-Stor-Ind method, Time Span= 0.00-120.00 hrs, dt= 0.01 hrs
Peak Elev= 460.73' @ 11.95 hrs

Device	Routing	Invert	Outlet Devices
#1	Primary	451.68'	**48.0" Round CMP_Round 48"** L= 50.0' Ke= 0.500 Inlet / Outlet Invert= 451.68' / 451.48' S= 0.0040 '/' Cc= 0.900 n= 0.020 Corrugated PE, corrugated interior, Flow Area= 12.57 sf
#2	Secondary	458.00'	**50.0' long x 10.0' breadth Broad-Crested Rectangular Weir** Head (feet) 0.20 0.40 0.60 0.80 1.00 1.20 1.40 1.60 Coef. (English) 2.49 2.56 2.70 2.69 2.68 2.69 2.67 2.64

Primary OutFlow Max=85.56 cfs @ 12.33 hrs HW=457.97' TW=455.97' (Dynamic Tailwater)
↑—**1=CMP_Round 48"** (Inlet Controls 85.56 cfs @ 6.81 fps)

Secondary OutFlow Max=191.56 cfs @ 11.95 hrs HW=460.72' TW=460.62' (Dynamic Tailwater)
↑—**2=Broad-Crested Rectangular Weir** (Weir Controls 191.56 cfs @ 1.41 fps)

Summary for Pond 4: Existing 36" Box Culvert

[57] Hint: Peaked at 460.62' (Flood elevation advised)
[80] Warning: Exceeded Pond 3 by 0.80' @ 11.81 hrs (54.13 cfs 0.100 af)
[80] Warning: Exceeded Pond 3 by 0.80' @ 11.81 hrs (296.21 cfs 0.561 af)
[80] Warning: Exceeded Pond CV-8 by 0.65' @ 11.81 hrs (15.06 cfs 0.075 af)

Inflow Area =	47.300 ac,	47.91% Impervious,	Inflow Depth =	5.01"	for 25-year adjusted event
Inflow =	242.90 cfs @	11.95 hrs,	Volume=	19.736 af	
Outflow =	242.90 cfs @	11.95 hrs,	Volume=	19.736 af,	Atten= 0%, Lag= 0.0 min
Primary =	119.11 cfs @	12.08 hrs,	Volume=	18.199 af	
Secondary =	132.11 cfs @	11.95 hrs,	Volume=	1.537 af	

Routing by Dyn-Stor-Ind method, Time Span= 0.00-120.00 hrs, dt= 0.01 hrs

Peak Elev= 460.62' @ 11.95 hrs

Device	Routing	Invert	Outlet Devices
#1	Primary	450.42'	**36.0" W x 36.0" H Box Culvert** L= 12.0' Ke= 0.500 Inlet / Outlet Invert= 450.42' / 450.17' S= 0.0208 '/' Cc= 0.900 n= 0.020 Corrugated PE, corrugated interior, Flow Area= 9.00 sf
#2	Secondary	460.00'	**100.0' long x 100.0' breadth Broad-Crested Rectangular Weir** Head (feet) 0.20 0.40 0.60 0.80 1.00 1.20 1.40 1.60 Coef. (English) 2.68 2.70 2.70 2.64 2.63 2.64 2.64 2.63

Primary OutFlow Max=119.59 cfs @ 12.08 hrs HW=460.03' TW=452.14' (Dynamic Tailwater)
↑—**1=Culvert** (Inlet Controls 119.59 cfs @ 13.29 fps)

Secondary OutFlow Max=131.71 cfs @ 11.95 hrs HW=460.62' TW=454.08' (Dynamic Tailwater)
↑—**2=Broad-Crested Rectangular Weir** (Weir Controls 131.71 cfs @ 2.12 fps)

Summary for Pond 7P: Existing 27" Culvert

[57] Hint: Peaked at 454.28' (Flood elevation advised)

Inflow Area =	1.850 ac,	0.00% Impervious,	Inflow Depth =	4.52"	for 25-year adjusted event
Inflow =	9.37 cfs @	12.10 hrs,	Volume=	0.696 af	
Outflow =	9.37 cfs @	12.10 hrs,	Volume=	0.696 af,	Atten= 0%, Lag= 0.0 min
Primary =	9.37 cfs @	12.10 hrs,	Volume=	0.696 af	
Secondary =	0.00 cfs @	0.00 hrs,	Volume=	0.000 af	

Routing by Dyn-Stor-Ind method, Time Span= 0.00-120.00 hrs, dt= 0.01 hrs
Peak Elev= 454.28' @ 11.96 hrs

Device	Routing	Invert	Outlet Devices
#1	Primary	450.50'	**27.0" Round Culvert** L= 127.0' Ke= 0.500 Inlet / Outlet Invert= 450.19' / 450.50' S= -0.0024 '/' Cc= 0.900 n= 0.025 Corrugated metal, Flow Area= 3.98 sf
#2	Secondary	454.50'	**100.0' long x 30.0' breadth Broad-Crested Rectangular Weir** Head (feet) 0.20 0.40 0.60 0.80 1.00 1.20 1.40 1.60 Coef. (English) 2.68 2.70 2.70 2.64 2.63 2.64 2.64 2.63

Primary OutFlow Max=9.48 cfs @ 12.10 hrs HW=452.65' TW=452.00' (Dynamic Tailwater)
↑—**1=Culvert** (Barrel Controls 9.48 cfs @ 2.72 fps)

Secondary OutFlow Max=0.00 cfs @ 0.00 hrs HW=450.50' (Free Discharge)
↑—**2=Broad-Crested Rectangular Weir** (Controls 0.00 cfs)

Summary for Pond CV-6: Proposed 36" South Culvert, CV-6

[57] Hint: Peaked at 461.71' (Flood elevation advised)
[62] Hint: Exceeded Reach 1R OUTLET depth by 3.81' @ 11.92 hrs

Inflow Area = 6.660 ac, 81.68% Impervious, Inflow Depth = 5.67" for 25-year adjusted event
Inflow = 58.55 cfs @ 11.92 hrs, Volume= 3.147 af
Outflow = 58.55 cfs @ 11.92 hrs, Volume= 3.147 af, Atten= 0%, Lag= 0.0 min
Primary = 58.55 cfs @ 11.92 hrs, Volume= 3.147 af
Secondary = 0.00 cfs @ 0.00 hrs, Volume= 0.000 af

Routing by Dyn-Stor-Ind method, Time Span= 0.00-120.00 hrs, dt= 0.01 hrs
Peak Elev= 461.71' @ 11.92 hrs

Device	Routing	Invert	Outlet Devices
#1	Primary	456.60'	**24.0" Round Culvert** L= 400.0' Ke= 0.500 Inlet / Outlet Invert= 456.60' / 449.20' S= 0.0185 '/' Cc= 0.900 n= 0.012, Flow Area= 3.14 sf
#2	Secondary	464.00'	**20.0' long x 5.0' breadth Broad-Crested Rectangular Weir** Head (feet) 0.20 0.40 0.60 0.80 1.00 1.20 1.40 1.60 1.80 2.00 2.50 3.00 3.50 4.00 4.50 5.00 5.50 Coef. (English) 2.34 2.50 2.70 2.68 2.68 2.66 2.65 2.65 2.65 2.65 2.67 2.66 2.68 2.70 2.74 2.79 2.88
#3	Primary	456.60'	**24.0" Round Culvert** L= 400.0' Ke= 0.500 Inlet / Outlet Invert= 456.60' / 449.20' S= 0.0185 '/' Cc= 0.900 n= 0.012, Flow Area= 3.14 sf

Primary OutFlow Max=58.16 cfs @ 11.92 hrs HW=461.68' TW=454.03' (Dynamic Tailwater)
↑—**1=Culvert** (Outlet Controls 29.08 cfs @ 9.26 fps)
└—**3=Culvert** (Outlet Controls 29.08 cfs @ 9.26 fps)

Secondary OutFlow Max=0.00 cfs @ 0.00 hrs HW=456.60' (Free Discharge)
↑—**2=Broad-Crested Rectangular Weir** (Controls 0.00 cfs)

Summary for Pond CV-7: Proposed 3 - 36" RCP Culverts, CV-7

[57] Hint: Peaked at 454.09' (Flood elevation advised)
[80] Warning: Exceeded Pond 7P by 0.29' @ 11.81 hrs (6.25 cfs 0.035 af)

Inflow Area = 55.810 ac, 50.35% Impervious, Inflow Depth = 5.07" for 25-year adjusted event
Inflow = 301.78 cfs @ 11.94 hrs, Volume= 23.579 af
Outflow = 301.78 cfs @ 11.94 hrs, Volume= 23.579 af, Atten= 0%, Lag= 0.0 min
Primary = 206.39 cfs @ 11.94 hrs, Volume= 22.724 af
Secondary = 95.39 cfs @ 11.94 hrs, Volume= 0.855 af

Routing by Dyn-Stor-Ind method, Time Span= 0.00-120.00 hrs, dt= 0.01 hrs
Peak Elev= 454.09' @ 11.94 hrs

Device	Routing	Invert	Outlet Devices
#1	Primary	448.50'	**36.0" Round 3 - 36" RCP Culverts X 3.00** L= 50.0' Ke= 0.500 Inlet / Outlet Invert= 448.50' / 448.10' S= 0.0080 '/' Cc= 0.900 n= 0.011, Flow Area= 7.07 sf
#2	Secondary	453.15'	**40.0' long x 15.0' breadth Broad-Crested Rectangular Weir** Head (feet) 0.20 0.40 0.60 0.80 1.00 1.20 1.40 1.60 Coef. (English) 2.68 2.70 2.70 2.64 2.63 2.64 2.64 2.63

Primary OutFlow Max=206.38 cfs @ 11.94 hrs HW=454.09' TW=443.18' (Dynamic Tailwater)
↑—**1=3 - 36" RCP Culverts** (Inlet Controls 206.38 cfs @ 9.73 fps)

Secondary OutFlow Max=95.31 cfs @ 11.94 hrs HW=454.09' (Free Discharge)
↑—**2=Broad-Crested Rectangular Weir** (Weir Controls 95.31 cfs @ 2.55 fps)

Summary for Pond CV-8: 30" HDPE, CV-8

[57] Hint: Peaked at 461.77' (Flood elevation advised)

Inflow Area =	2.180 ac,100.00% Impervious,	Inflow Depth =	6.00"	for 25-year adjusted event	
Inflow =	20.06 cfs @	11.94 hrs, Volume=	1.090 af		
Outflow =	20.06 cfs @	11.94 hrs, Volume=	1.090 af,	Atten= 0%,	Lag= 0.0 min
Primary =	20.06 cfs @	11.94 hrs, Volume=	1.090 af		

Routing by Dyn-Stor-Ind method, Time Span= 0.00-120.00 hrs, dt= 0.01 hrs
Peak Elev= 461.77' @ 11.95 hrs

Device	Routing	Invert	Outlet Devices
#1	Primary	453.70'	**30.0" Round Culvert** L= 50.0' Ke= 0.900 Inlet / Outlet Invert= 453.70' / 453.50' S= 0.0040 '/' Cc= 0.900 n= 0.012, Flow Area= 4.91 sf

Primary OutFlow Max=19.90 cfs @ 11.94 hrs HW=461.76' TW=460.62' (Dynamic Tailwater)
↑—**1=Culvert** (Inlet Controls 19.90 cfs @ 4.05 fps)

Summary for Pond CV-9: Proposed Detention Pond (at former leachate pond), CV-9

Inflow Area =	63.080 ac, 55.31% Impervious,	Inflow Depth =	5.01"	for 25-year adjusted event	
Inflow =	275.65 cfs @	11.93 hrs, Volume=	26.313 af		
Outflow =	24.09 cfs @	13.23 hrs, Volume=	25.926 af,	Atten= 91%,	Lag= 78.2 min
Primary =	24.09 cfs @	13.23 hrs, Volume=	25.926 af		
Secondary =	0.00 cfs @	0.00 hrs, Volume=	0.000 af		

Routing by Dyn-Stor-Ind method, Time Span= 0.00-120.00 hrs, dt= 0.01 hrs
Peak Elev= 444.54' @ 13.23 hrs Surf.Area= 4.655 ac Storage= 15.687 af

Plug-Flow detention time= 554.6 min calculated for 25.924 af (99% of inflow)
Center-of-Mass det. time= 545.1 min (1,301.8 - 756.6)

Volume	Invert	Avail.Storage	Storage Description
#1	441.00'	43.047 af	**350.00'W x 525.00'L x 9.00'H Prismatoid Z=3.0**

Device	Routing	Invert	Outlet Devices
#1	Primary	441.00'	**24.0" Round Culvert** L= 65.5' Ke= 0.500 Inlet / Outlet Invert= 441.00' / 440.50' S= 0.0076 '/' Cc= 0.900 n= 0.012, Flow Area= 3.14 sf
#2	Secondary	449.00'	**20.0' long x 16.0' breadth Broad-Crested Rectangular Weir** Head (feet) 0.20 0.40 0.60 0.80 1.00 1.20 1.40 1.60

Coef. (English) 2.68 2.70 2.70 2.64 2.63 2.64 2.64 2.63

Primary OutFlow Max=24.09 cfs @ 13.23 hrs HW=444.54' TW=441.38' (Dynamic Tailwater)
↑—**1=Culvert** (Inlet Controls 24.09 cfs @ 7.67 fps)

Secondary OutFlow Max=0.00 cfs @ 0.00 hrs HW=441.00' TW=440.50' (Dynamic Tailwater)
↑—**2=Broad-Crested Rectangular Weir** (Controls 0.00 cfs)

APPENDIX E

STORMWATER CALCULATIONS FOR NORTH QUARRY NORTHWEST DRAINAGE AREA

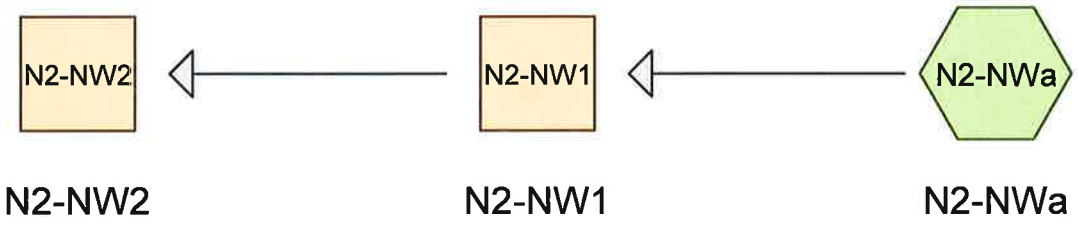

NORTH QUARRY CAP NORTHWEST STORMWATER MODEL

Subcat Reach Pond Link

Routing Diagram for North Cap Proposed
Prepared by Cornerstone, Printed 7/26/2013
HydroCAD® 10.00 s/n 04282 © 2011 HydroCAD Software Solutions LLC

Area Listing (selected nodes)

Area (acres)	CN	Description (subcatchment-numbers)
2.730	100	(N2-NWa)
2.730	**100**	**TOTAL AREA**

Time span=0.00-120.00 hrs, dt=0.01 hrs, 12001 points
Runoff by SCS TR-20 method, UH=SCS
Reach routing by Dyn-Stor-Ind method - Pond routing by Dyn-Stor-Ind method

Subcatchment N2-NWa: N2-NWa Runoff Area=2.730 ac 100.00% Impervious Runoff Depth=6.00"
Tc=1.0 min CN=100 Runoff=27.26 cfs 1.365 af

Reach N2-NW1: N2-NW1 Avg. Flow Depth=1.35' Max Vel=3.14 fps Inflow=27.26 cfs 1.365 af
n=0.030 L=620.0' S=0.0050 '/' Capacity=54.51 cfs Outflow=24.14 cfs 1.365 af

Reach N2-NW2: N2-NW2 Avg. Flow Depth=0.95' Max Vel=6.37 fps Inflow=24.14 cfs 1.365 af
n=0.050 L=335.0' S=0.0800 '/' Capacity=54.14 cfs Outflow=23.86 cfs 1.365 af

Total Runoff Area = 2.730 ac Runoff Volume = 1.365 af Average Runoff Depth = 6.00"
0.00% Pervious = 0.000 ac 100.00% Impervious = 2.730 ac

Summary for Subcatchment N2-NWa: N2-NWa

Runoff = 27.26 cfs @ 11.91 hrs, Volume= 1.365 af, Depth= 6.00"

Runoff by SCS TR-20 method, UH=SCS, Time Span= 0.00-120.00 hrs, dt= 0.01 hrs
Type II 24-hr 25 year adj Rainfall=6.00"

	Area (ac)	CN	Description
*	2.730	100	
	2.730		100.00% Impervious Area

Tc (min)	Length (feet)	Slope (ft/ft)	Velocity (ft/sec)	Capacity (cfs)	Description
1.0					**Direct Entry,**

Summary for Reach N2-NW1: N2-NW1

Inflow Area = 2.730 ac,100.00% Impervious, Inflow Depth = 6.00" for 25 year adj event
Inflow = 27.26 cfs @ 11.91 hrs, Volume= 1.365 af
Outflow = 24.14 cfs @ 11.93 hrs, Volume= 1.365 af, Atten= 11%, Lag= 1.3 min

Routing by Dyn-Stor-Ind method, Time Span= 0.00-120.00 hrs, dt= 0.01 hrs
Max. Velocity= 3.14 fps, Min. Travel Time= 3.3 min
Avg. Velocity = 0.78 fps, Avg. Travel Time= 13.3 min

Peak Storage= 4,761 cf @ 11.93 hrs
Average Depth at Peak Storage= 1.35'
Bank-Full Depth= 2.00' Flow Area= 14.0 sf, Capacity= 54.51 cfs

3.00' x 2.00' deep channel, n= 0.030
Side Slope Z-value= 2.0 '/' Top Width= 11.00'
Length= 620.0' Slope= 0.0050 '/'
Inlet Invert= 0.00', Outlet Invert= -3.10'



Summary for Reach N2-NW2: N2-NW2

Inflow Area = 2.730 ac,100.00% Impervious, Inflow Depth = 6.00" for 25 year adj event
Inflow = 24.14 cfs @ 11.93 hrs, Volume= 1.365 af
Outflow = 23.86 cfs @ 11.94 hrs, Volume= 1.365 af, Atten= 1%, Lag= 0.6 min

Routing by Dyn-Stor-Ind method, Time Span= 0.00-120.00 hrs, dt= 0.01 hrs
Max. Velocity= 6.37 fps, Min. Travel Time= 0.9 min
Avg. Velocity = 1.41 fps, Avg. Travel Time= 4.0 min

Peak Storage= 1,255 cf @ 11.94 hrs
Average Depth at Peak Storage= 0.95'
Bank-Full Depth= 1.50' Flow Area= 6.8 sf, Capacity= 54.14 cfs

3.00' x 1.50' deep channel, n= 0.050
Side Slope Z-value= 1.0 '/' Top Width= 6.00'
Length= 335.0' Slope= 0.0800 '/'
Inlet Invert= 0.00', Outlet Invert= -26.80'

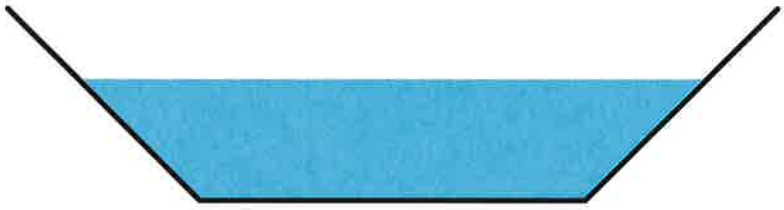

APPENDIX F

STORMWATER CALCULATIONS FOR NORTH QUARRY NORTHEAST DRAINAGE AREA

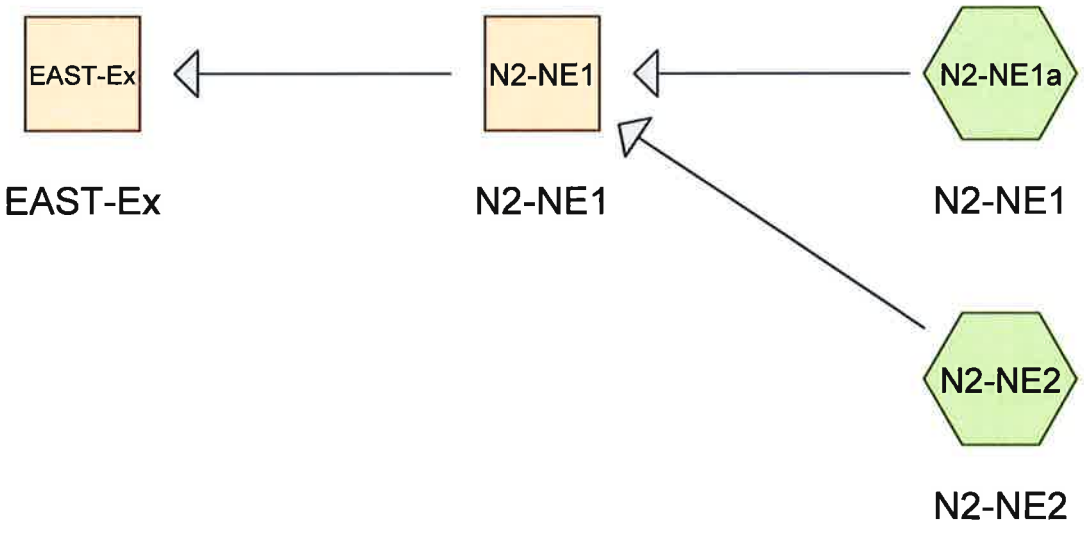

NORTH QUARRY CAP NORTHEAST STORMWATER MODEL

Subcat Reach Pond Link

Routing Diagram for North Quarry Cap Proposed
Prepared by Cornerstone, Printed 7/26/2013
HydroCAD® 10.00 s/n 04282 © 2011 HydroCAD Software Solutions LLC

Area Listing (selected nodes)

Area (acres)	CN	Description (subcatchment-numbers)
3.320	100	(N2-NE1a, N2-NE2)
3.320	**100**	**TOTAL AREA**

Time span=0.00-120.00 hrs, dt=0.01 hrs, 12001 points
Runoff by SCS TR-20 method, UH=SCS
Reach routing by Dyn-Stor-Ind method - Pond routing by Dyn-Stor-Ind method

Subcatchment N2-NE1a: N2-NE1 Runoff Area=2.930 ac 100.00% Impervious Runoff Depth=6.00"
Tc=1.0 min CN=100 Runoff=29.25 cfs 1.465 af

Subcatchment N2-NE2: N2-NE2 Runoff Area=0.390 ac 100.00% Impervious Runoff Depth=6.00"
Tc=1.0 min CN=100 Runoff=3.89 cfs 0.195 af

Reach EAST-Ex: EAST-Ex Avg. Flow Depth=0.83' Max Vel=5.90 fps Inflow=30.72 cfs 1.660 af
n=0.030 L=100.0' S=0.0330 '/' Capacity=1,125.72 cfs Outflow=30.67 cfs 1.660 af

Reach N2-NE1: N2-NE1 Avg. Flow Depth=1.52' Max Vel=3.35 fps Inflow=33.15 cfs 1.660 af
n=0.030 L=450.0' S=0.0050 '/' Capacity=54.51 cfs Outflow=30.72 cfs 1.660 af

Total Runoff Area = 3.320 ac Runoff Volume = 1.660 af Average Runoff Depth = 6.00"
0.00% Pervious = 0.000 ac 100.00% Impervious = 3.320 ac

Summary for Subcatchment N2-NE1a: N2-NE1

Runoff = 29.25 cfs @ 11.91 hrs, Volume= 1.465 af, Depth= 6.00"

Runoff by SCS TR-20 method, UH=SCS, Time Span= 0.00-120.00 hrs, dt= 0.01 hrs
Type II 24-hr 25 year adj Rainfall=6.00"

	Area (ac)	CN	Description
*	2.930	100	
	2.930		100.00% Impervious Area

Tc (min)	Length (feet)	Slope (ft/ft)	Velocity (ft/sec)	Capacity (cfs)	Description
1.0					**Direct Entry,**

Summary for Subcatchment N2-NE2: N2-NE2

Runoff = 3.89 cfs @ 11.91 hrs, Volume= 0.195 af, Depth= 6.00"

Runoff by SCS TR-20 method, UH=SCS, Time Span= 0.00-120.00 hrs, dt= 0.01 hrs
Type II 24-hr 25 year adj Rainfall=6.00"

	Area (ac)	CN	Description
*	0.390	100	
	0.390		100.00% Impervious Area

Tc (min)	Length (feet)	Slope (ft/ft)	Velocity (ft/sec)	Capacity (cfs)	Description
1.0					**Direct Entry,**

Summary for Reach EAST-Ex: EAST-Ex

Inflow Area = 3.320 ac,100.00% Impervious, Inflow Depth = 6.00" for 25 year adj event
Inflow = 30.72 cfs @ 11.93 hrs, Volume= 1.660 af
Outflow = 30.67 cfs @ 11.93 hrs, Volume= 1.660 af, Atten= 0%, Lag= 0.2 min

Routing by Dyn-Stor-Ind method, Time Span= 0.00-120.00 hrs, dt= 0.01 hrs
Max. Velocity= 5.90 fps, Min. Travel Time= 0.3 min
Avg. Velocity = 1.61 fps, Avg. Travel Time= 1.0 min

Peak Storage= 520 cf @ 11.93 hrs
Average Depth at Peak Storage= 0.83'
Bank-Full Depth= 4.00' Flow Area= 76.0 sf, Capacity= 1,125.72 cfs

3.00' x 4.00' deep channel, n= 0.030
Side Slope Z-value= 4.0 '/' Top Width= 35.00'
Length= 100.0' Slope= 0.0330 '/'
Inlet Invert= 0.00', Outlet Invert= -3.30'

APPENDIX E

TEMPORARY CAP AND CAP INTEGRITY SYSTEM CONSTRUCTION QUALITY ASSURANCE PLAN

WEAVER
BOOS
CONSULTANTS

Project No.: 0120-131-17-02
May 7, 2013

Mr. Craig Almanza
Area Environmental Manager
Republic Services, Inc.
12978 St. Charles Rock Road
Bridgeton, MO 63044

Re: Response to Comments
Temporary Cap & Cap Integrity System CQA Plan
Bridgeton Landfill

Dear Mr. Almanza:

The following are responses to MDNR and the St. Louis County Health Department comments regarding the Temporary Cap and Cap Integrity System CQA Plan for the Bridgeton Landfill. The MDNR and the St. Louis County Health Department comments were received via email on May 1, 2013.

Comment 1: Section 3.1.1 Manufacturing, please verify if there will be specific manufacturing testing and requirements for the EVOH material/resin itself in addition to the product as a whole.

As part of the manufacturing process, the EVOH material source resin is tested to verify and document conformance with the material specifications. The CQA Manager shall be provided with this testing data to verify conformance with the CQA Plan. Section 3.1.1 of the CQA Plan has been revised accordingly.

Comment 2: Section 3.1.5 Surface Preparation, due to the proposed design of the cap, standard surface preparation and approval as specified may not be plausible. If necessary, please include more site specific preparation plans for your CQA Monitor.

The subgrade for the temporary cap area shall be "tracked-in" and "back-dragged" with a bulldozer to provide a smooth surface. Prior to installation of FML, a cushion geotextile will be installed on the subgrade surface. Section 3.1.5 of the CQA plan has been revised accordingly.

WEAVER
BOOS
CONSULTANTS

Project No.: 0120-131-17-02
May 7, 2013

Mr. Craig Almanza
Area Environmental Manager
Republic Services, Inc.
12978 St. Charles Rock Road
Bridgeton, MO 63044

Re: Response to Comments
Temporary Cap & Cap Integrity System CQA Plan
Bridgeton Landfill

Dear Mr. Almanza:

The following are responses to MDNR and the St. Louis County Health Department comments regarding the Temporary Cap and Cap Integrity System CQA Plan for the Bridgeton Landfill. The MDNR and the St. Louis County Health Department comments were received via email on May 1, 2013.

Comment 1: Section 3.1.1 Manufacturing, please verify if there will be specific manufacturing testing and requirements for the EVOH material/resin itself in addition to the product as a whole.

As part of the manufacturing process, the EVOH material source resin is tested to verify and document conformance with the material specifications. The CQA Manager shall be provided with this testing data to verify conformance with the CQA Plan. Section 3.1.1 of the CQA Plan has been revised accordingly.

Comment 2: Section 3.1.5 Surface Preparation, due to the proposed design of the cap, standard surface preparation and approval as specified may not be plausible. If necessary, please include more site specific preparation plans for your CQA Monitor.

The subgrade for the temporary cap area shall be "tracked-in" and "back-dragged" with a bulldozer to provide a smooth surface. Prior to installation of FML, a cushion geotextile will be installed on the subgrade surface. Section 3.1.5 of the CQA plan has been revised accordingly.

Comment 3: Section 3.1.8.3 Overlapping, please specify the minimum panel overlap for the flexible membrane liner (FML).

The FML panels shall have a minimum overlap of 4 to 6 inches for fusion welding. For extrusion welding, the FML shall overlap a minimum of 6 inches on each side. Section 3.1.8.3 of the CQA plan has been revised accordingly.

Comment 4: Section 3.1.8.7 Test Seams, states "Test seams will be made at the beginning of each seaming period and a minimum of once every five hours of continuous welding for each seaming apparatus used that day." Please specify if the test seams will be each seaming apparatus/operator combination.

Section 3.1.8.7 of the CQA plan has been revised to specify that tests seams are required for each seaming apparatus/operator combination.

Comment 5: Section 3.4.6 Perimeter Collection Sumps/Rock Chimneys, please remove rock chimneys from the section title.

Rock Chimneys have been removed from section title. Section 3.4.6 of the CQA Plan has been revised accordingly.

Comment 6: The literature provided in Appendix A states the testing requirements and specifications for the selected FML material is a 50 mil textured LLDPE. Previous submittals and correspondences have indicated that the outer layers of the FML will consist of 60 mil textured HDPE. Please explicitly state what the FML cap material will be made of and submit the accompanying testing information accordingly. This information must be consistent with each submittal.

During the preliminary material selection discussions for the geomembrane to be utilized on this project, an EVOH geomembrane with a "nominal" thickness of 60 mil was discussed. The final product chosen for this project consists of a geomembrane with an EVOH core layer for vapor control and outer layers of HDPE for UV protection in an exposed application. This geomembrane will have a minimum average thickness of 50 mil which includes the EVOH layer and the

other layers of HDPE. There was an incorrect identification in the Raven Industries correspondence for this material in the previous submission. Appendix A contains the revised letter along with the testing requirements for the EVOH with HDPE outer layers (X60FC1).

We trust that the information provided in this response is sufficient for your needs. For your convenience, an updated copy of the proposed CQA plan has been attached.

Sincerely,

Weaver Boos Consultants





Mark A. Moyer
Senior Project Manager

Ali Hashimi, P.E.
Certifying Engineer

Encl: Temporary Cap and Cap Integrity System CQA Plan, Revision No. 1

WEAVER
BOOS
CONSULTANTS

TEMPORARY CAP AND CAP INTEGRITY SYSTEM CONSTRUCTION QUALITY ASSURANCE PLAN

BRIDGETON LANDFILL
Bridgeton, Missouri

APRIL 2013
REVISION 1: MAY 7, 2013

Prepared For:
Bridgeton Landfill, LLC
12978 St. Charles Rock Road
Bridgeton, Missouri 63044



TEMPORARY CAP AND CAP INTEGRITY SYSTEM
CQA PLAN
BRIDGETON REGIONAL LANDFILL

TABLE OF CONTENTS

1.0 INTRODUCTION 1

2.0 GENERAL CONDITIONS 3

2.1 Responsibility and Authority 3

2.2 Inspection and Testing 4

2.3 Project Meetings 4

3.0 Construction Quality Assurance Procedures 5

3.1 Temporary Cover Flexible Membrane Liners (FML) 5
3.1.1 Manufacturing 5
3.1.2 FML Rolls 5
3.1.3 Acceptance Criteria 6
3.1.4 Transportation, Handling, and Storage 6
3.1.5 Surface Preparation 7
3.1.6 Anchorage System 8
3.1.7 FML Placement 8
3.1.7.1 Panel Identification 8
3.1.7.2 Panel Placement 9
3.1.8 Field Seaming 10
3.1.8.1 Seam Layout 10
3.1.8.2 Requirement of Personnel 11
3.1.8.3 Overlapping 11
3.1.8.4 Seam Preparation 11
3.1.8.5 Seaming Equipment 11
3.1.8.6 Weather Conditions for Seaming 12
3.1.8.7 Test Seams 13
3.1.8.8 General Seaming Procedure 14
3.1.9 Seam Testing 14
Seam Pressure Test Procedure: 15
3.1.9.1 Destructive Seam Strength Testing 17
3.1.10 Defects and Repairs 19
3.1.10.1 Identification 19
3.1.10.2 Evaluation 19
3.1.10.3 Repair Procedures 19
3.1.10.4 Seam Reconstruction Procedures 19
3.1.10.5 Documentation of Repairs 20

3.2 Non-Woven Geotextile 20
3.2.1 Transportation, Handling, and Storage 21
3.2.2 Installation 21

400 ANN ST. NW, SUITE 201A
GRAND RAPIDS, MICHIGAN 49504
PHONE: (616)458-8052

3.2.3 Geotextile Seaming 21
3.2.4 Damage Repair 22

3.3 Double-Sided Geocomposite 22
3.3.1 Transportation, Handling, and Storage 22
3.3.2 Installation 23
3.3.3 Geocomposite Panel Seaming 24
3.3.4 Damage Repair 24

3.4 Cap Integrity System 24
3.4.1 Below-Cap Stone Collectors 24
3.4.2 Cap Integrity Piping 24
3.4.3 Strip Drains 25
3.4.4 Access Roads 25
3.4.5 Perimeter Collection Trench 25
3.4.6 Perimeter Collection Sumps 25

3.5 Storm Water Management 26

400 ANN ST. NW, SUITE 201A
GRAND RAPIDS, MICHIGAN 49504
PHONE: (616)458-8052

1.0 INTRODUCTION

The Missouri Department of Natural Resources Solid Waste Management Program (MDNR-SWMP) requires construction quality assurance (CQA) and construction quality control (CQC) on landfill components to document quality landfill construction. CQA is typically performed by a third-party independent to the owner and contractor to document the quality of construction on key landfill components. CQC procedures are typically performed by the contractor and/or owner throughout construction to document that landfill components are constructed in accordance with applicable construction standards and specifications. The technical guidance document entitled Quality Assurance and Quality Control for Waste Containment Facilities (EPN600/R-93/182) produced by the U.S. Environmental Protection Agency specifically defines the roles that CQA and CQC play during landfill construction:

- CQA: A planned system of activities that provides the owner and permitting agency assurance that the facility was constructed as specified in the design. CQA includes inspections, verifications, audits, and evaluations of materials and workmanship necessary to determine and document the quality of the constructed facility. CQA refers to the measures taken by the CQA organization to assess if the contractor or installer is in compliance with the plans and specifications for a project.
- CQC: A planned system of inspections that is used to directly monitor and control the quality of a construction project. CQC is normally performed by the contractor and is necessary to achieve quality in the constructed system. CQC refers to measures taken by the contractor or installer to determine compliance with the requirements for material and workmanship as stated in the plans and specifications for the project.

This CQA Plan is specific to the CQA activities to be completed by an independent third- party, and addresses the temporary cover integrity system to be constructed for the Bridgeton Landfill in Bridgeton, Missouri. The facility is owned and operated by Bridgeton Landfill, LLC. This CQA Plan has been prepared in general conformance with the Missouri Solid Waste Management Rules.

A copy of this CQA Plan is to be maintained at the Bridgeton Landfill for use during landfill temporary cover construction. Any revisions to the design or the approved CQA Plan shall require a permit modification to be reviewed by the MDNR-SWMP and St. Louis County Department of Health (DOH). The MDNR-SWMP and St. Louis County DOH must be kept

400 ANN ST. NW, SUITE 201A
GRAND RAPIDS, MICHIGAN 49504
PHONE: (616)458-8052

informed throughout landfill construction projects. The MDNR-SWMP and St. Louis County DOH will review all records and results from the implementation of the CQA Plan.

400 ANN ST. NW, SUITE 201A
GRAND RAPIDS, MICHIGAN 49504
PHONE: (616)458-8052

2.0 GENERAL CONDITIONS

2.1 Responsibility and Authority

Bridgeton Landfill, LLC will be responsible for the implementation of this CQA Plan. The following is a list of responsible personnel:

Owner's Representative

A representative of Bridgeton Landfill, LLC shall be responsible for coordination between the landfill owner, Bridgeton Landfill, LLC, the construction crew, and the third-party CQA Engineer. With the MDNR-SWMP's prior approval, the owner/operator shall delegate authority, and correspondingly, shall be responsible to see that the CQA Plan is followed.

CQA Engineer

A professional engineer licensed to practice in Missouri shall be retained by Bridgeton Landfill, LLC to perform on-site construction oversight and quality assurance testing, and to prepare a final report demonstrating that the requirements of this CQA Plan are met. In addition, the CQA Engineer or his designee shall coordinate with the contractor(s) and/or installer(s) and their CQC personnel for the purposes of sharing CQA and CQC information. Should it become apparent to the CQA Engineer or his designee that construction quality is substandard, the CQA Engineer shall inform the Owner's Representative of the apparent deficiencies such that adjustments can be made. The CQA Engineer must be employed by an organization that operates independently of the landfill contract operator, construction contractor, Bridgeton Landfill, LLC, and the permit holder. The CQA Engineer will be responsible for certifying that construction was completed in general accordance with the permit requirements and the construction engineering design plans and specifications.

CQA Inspector

If the CQA Engineer cannot serve to provide on-site inspection of the temporary cover construction activities and reporting, the CQA Engineer shall designate a CQA Inspector to perform those duties. The CQA Inspector shall be an individual that represents the CQA Engineer and provides on-site construction oversight, quality assurance testing, and general observance and documentation of construction. The CQA Inspector will document on-site construction activities on a Daily Field Activities Report. An example of this report form is included in Appendix A.

400 ANN ST. NW, SUITE 201A
GRAND RAPIDS, MICHIGAN 49504
PHONE: (616)458-8052

2.2 Inspection and Testing

This CQA Plan describes the inspection and testing requirements for the construction of the landfill temporary cover system. Section 3.0 outlines the minimum requirements and guidelines to be followed to execute the CQA Plan.

2.3 Project Meetings

Throughout the construction activities, communication will play a major role in completing a successful construction project and achieving the requirements of the approved plans and specifications and permit documents. At a minimum, the following communications guidelines will be met:

Pre-Construction Meeting: A meeting involving Bridgeton Landfill, LLC and the Owner's Representative, CQA personnel including the CQA Engineer and CQA Inspector, and the contractor(s) shall take place prior to the start of construction. This meeting should include discussion of the following:

- Each party's responsibilities;
- Lines or means of communication;
- Procedures for changes or problems;
- CQA procedures and requirements;
- Level of the MDNR-SWMP's involvement; and
- Other issues as they pertain to the construction project.

Daily Progress Meetings: Regularly scheduled, daily meetings between CQA personnel and the contractor(s) shall take place to review and discuss such topics as previous work, future work, construction problems, schedule revisions, and other issues that require attention on a frequent basis.

- Other Meetings: Unscheduled meetings shall take place as required to address issues such as construction progress and changed conditions as circumstances dictate.

Under all circumstances, the MDNR-SWMP and St. Louis County DOH will be given seven (7) days advance notification prior to the initiation of landfill temporary cover system construction.

3.0 CONSTRUCTION QUALITY ASSURANCE PROCEDURES

3.1 Temporary Cover Flexible Membrane Liners (FML)

3.1.1 Manufacturing

The Manufacturer will provide the CQA Manager with the following information for the FML to be used at the Bridgeton Landfill:

- Written certification accompanying all material shipments stating that their product meets manufacturing specifications and passes QA/QC requirements as identified by the manufacturer. The Manufacturer shall also provide Quality Control documentation and results of testing that the resin supplied for the production of this material specified in this section shall meet or exceed the requirements of the specifications and CQA Plan.
- A copy of the quality control certificates issued by the Resin Supplier;
- Summary reports of the test results, including the test frequency used by the manufacturer to verify the quality of each resin batch used to manufacture FML rolls assigned to the project. At a minimum, one series of tests will be conducted for each resin batch.

Based on the data supplied by the Manufacturer, the CQA Manager will notify the Owner of any deviation from the project specifications or CQA Plan.

3.1.2 FML Rolls

The Manufacturer will provide the Owner or CQA Manager with a written certification accompanying all material shipments stating that their product meets manufacturing specifications and passes QA/QC requirements as identified by the manufacturer for the geomembrane produced, and that the geomembrane supplied under this plan will meet the requirements shown in Appendix A.

The Manufacturer will provide the Owner or CQA Manager with a quality control certificate for all the FML rolls shipped to the site. The quality control certificate should be signed by a responsible party employed by the Manufacturer. The quality control certificate shall include:

- Roll number, identification, and;
- Sampling procedures and testing frequency of quality control tests as well as test results shall be in accordance with the requirements of Appendix A.

The CQA Manager will:

- Obtain conformance test samples, at the place of manufacture or as the rolls are delivered to the site, if required by Owner,
- Review the quality control certificates, test methods used, and the measured roll properties for conformance to the specifications; and,
- Verify that the quality control certificates have been provided for all rolls.

3.1.3 Acceptance Criteria

Acceptable criteria for tests to be performed on geomembrane rolls are shown in Appendix A and only the Owner or the CQA Manager can authorize retesting of geomembrane rolls because of failure to meet any of the requirements.

For those tests where results are reported for both machine and cross direction, each result will be compared to the listed specification to determine acceptance. The following procedure will be used for interpreting results:

- If the value meets the stated specification, then the roll and the lot will be accepted for use in the liners for the job site.
- If the result does not meet the specification, then the roll and the lot may be retested on samples either from the original roll sample or from another sample collected by the CQA Consultant and forwarded to the Manufacturer. Two additional tests must be performed for the failed test procedure. If both of the retests are acceptable, then the roll and lot will be considered acceptable. If either of the two additional tests fail, then both the roll and lot are unsuitable and shall be rejected.

The Manufacturer may request that another round of tests be performed on samples collected by the CQA Consultant and tested by the Manufacturer. Under this procedure, the average value used for the purpose of determining acceptance will be based on the average value of all specimens tested, including those from the failed round.

3.1.4 Transportation, Handling, and Storage

Transportation of the FML is the responsibility of the Manufacturer, the Installer, or other party as decided by the Owner. All handling on-site after unloading is the responsibility of the Installer. The CQA Monitor will monitor and document the following with regard to the geomembrane:

- Each FML roll is labeled with an identification number and a batch (lot) number;
- FML delivered to the site is free from defects and/or damage.
    - The FML must have no striations, roughness (except for where the textured geomembrane is specified), or bubbles on the surface.
    - The FML must be free of holes, blisters, undispersed raw materials, or any other sign of contamination by foreign matter.
- The adequacy of on-site handling of equipment to minimize risk of damage to both the FML and underlying geosynthetic or subgrade materials; and,
- The careful handling of the FML by the Installer's personnel.

The CQA Monitor will indicate/report to the Owner any FML or portions thereof, which in the opinion of the CQA Monitor should be rejected and removed from the site because of visually obvious flaws; or rolls that include flaws, which may be repairable.

Selected samples of the FML material may be obtained by the CQA Manager for physical testing to document that the FML material tested satisfies the minimum material property requirements established in Section 5.1.3.

3.1.5 Surface Preparation

The Owner or Contractor will be responsible for preparing the supporting soil according to the plans and specifications. The CQA Monitor will document that:

- A qualified Professional Engineer or Land Surveyor has determined that lines and grades are in substantial conformance with design plan and allow for drainage from the area;
- The surfaces to be lined will be inspected for conditions that could be damaging to the overlying geosynthetics;
- The surface of the supporting soil does not contain stones which may be damaging to the geomembrane; and
- There are no areas excessively softened by high water content.
- The subgrade for the temporary cap area shall be “tracked-in” and “back-dragged” with a bulldozer to provide a smooth surface. Prior to installation of FML, a cushion geotextile will be installed on the subgrade surface.

The FML Installer will certify in writing that the surface on which the geomembrane will be installed is acceptable. This certification of acceptance will be reported daily by the FML Installer to the CQA Monitor prior to commencement of the FML installation.

After the surface has been accepted by the FML Installer, it will be the FML Installer's responsibility to indicate to the Owner or CQA Monitor any change in the surface conditions that may require repair work. If the CQA Monitor concurs with the FML Installer, then the CQA Monitor will identify the necessary repair work to be performed by the Owner or Contractor.

At any time prior to or during the FML installation, the CQA Monitor will notify the Owner or Contractor of locations, which, in the opinion of the CQA Monitor, will require corrective action prior to the geomembrane installation.

3.1.6 Anchorage System

The anchor trenches will be excavated to the lines and depth shown on the temporary cap and corer integrity system construction drawings prior to the FML placement. The CQA Monitor will document the anchor trench construction.

Rounded corners shall be provided in the trenches where the FML enters the trench to allow the FML to be uniformly supported by the subgrade and to avoid sharp bends in the FML. Precautions shall be taken to minimize loose soil in the anchor trenches. FML should be seamed completely to the ends of all panels to minimize the potential for tear propagation along the seam. Backfilling of the anchor trenches will be conducted using soils that will not damage the underlying geosynthetics and shall be placed with compactive effort.

3.1.7 FML Placement

3.1.7.1 Panel Identification

A panel is the unit area of FML that is seamed in the field. The unit area can consist of a full roll or a portion of the roll cut in the field.

Prior to or during the initial meeting, the FML Installer will provide the Owner and CQA Manager with a drawing of the cell to be lined showing the orientation of the FML panels. The CQA Manager will review the panel layout and document that it is consistent with the accepted state of practice.

Each panel will be given an "identification code" (number or letter-number) consistent with the layout plan. This identification code will be agreed upon by the FML Installer and the CQA

Monitor. This identification code shall be simple and logical (note that roll numbers established in the manufacturing plant may be cumbersome and are unrelated to location in the field).

The CQA Monitor will establish a table or chart showing correspondence between roll numbers and panel identification codes. The panel identification codes will be used for all quality assurance records.

3.1.7.2 Panel Placement

The CQA Monitor will document that panel installation is consistent with regard to locations indicated in the FML Installer's layout plan, as approved or modified at the initial meeting.

Installation:

- Only those panels that can be reasonably expected to be anchored or seamed together in one day are to be unrolled. Panels may be installed using any of the following schedules:
    - All panels placed prior to field seaming;
    - Panels placed one at a time and each panel seamed immediately after its placement;
    - Any combination of the above.
- The CQA Monitor will record on a drawing the identification code, location, and date of installation of each FML panel. The location of FML panels and intersections will be surveyed in for certification.
- Deployment of the FML can be accomplished through the use of lightweight, rubber tired equipment such as a 4-wheel all terrain vehicle (ATV), provided the ATV makes no sudden stops, starts, or turns on the geosynthetic. ATV traffic on the geosynthetics shall be minimized.

If a decision is reached to place all panels prior to field seaming, care should be taken to facilitate drainage in the event of precipitation and anchoring for winds. Scheduling decisions must be made during placement in accordance with varying conditions. The CQA Monitor will evaluate changes in the schedule proposed by the Installer and will advise the Owner and the CQA Manager on the acceptability of that change. The CQA Monitor will document that the condition of the supporting soil has not changed detrimentally during installation.

Weather Conditions:

- FML panel deployment or seaming shall not take place during any precipitation, in the presence of excessive moisture (e.g. fog, dew), in an area of ponded water, or in the presence of high winds.
- The CQA Monitor will inform the Owner when the above conditions are not fulfilled or has observed subgrade damage caused by adverse weather conditions.
- The FML Installer will inform the Owner if the weather conditions are not acceptable for FML deployment or seaming.
- The Installer shall provide suitable wind protection as necessary to maintain the integrity of the installation.

The CQA Monitor will:

- Observe equipment damage to the FML as a result of handling, traffic, leakage of hydrocarbons, or other means;
- Observe deviations from the requirement that no one is permitted to smoke, wear damaging shoes, or engage in other activities which could damage the FML;
- Observe scratches, crimps, or wrinkles in the FML and any damage to the subgrade; and,
- Observe damage caused by loading necessary to prevent uplift by wind.

The CQA Monitor will inform the Owner of the above conditions.

After placement, the CQA Monitor will observe each panel for damage. The CQA Monitor will advise the FML Installer and Owner which panels, or portions of panels, should be rejected, repaired, or accepted. Damaged panels or portions of damaged panels that have been rejected will be marked and their removal from the work area recorded by the CQA Monitor. Repairs should be made according to procedures described in Section 3.1.10.

3.1.8 Field Seaming

3.1.8.1 Seam Layout

The FML Installer will provide the Owner and CQA Manager with drawings of the cell to be lined showing field seams in a manner which differentiates the seam types, if any. The CQA Manager will review the seam layouts.

In general, seams shall be oriented parallel to the line of maximum slope; i.e., oriented up and down, not across, the slope.

It is anticipated that cross seams on the slope will be required. Cross seams on adjacent panels should be staggered so that they are separated a distance greater than the width of a panel.

A seam numbering system compatible with the panel numbering system should be agreed upon at the initial meeting.

3.1.8.2 Requirement of Personnel

All personnel performing seaming operations must be qualified by experience or by successfully passing seaming tests. At least one seamer will have a minimum of 1,000,000 ft² of FML seaming experience using the same type of seaming apparatus in use at the site. The Owner or CQA Monitor has the right to reject a seamer if they cannot demonstrate suitable experience and qualifications.

3.1.8.3 Overlapping

The CQA Monitor will observe that FML panels were properly overlapped for fusion welding and extrusion welding. The FML panels shall have a minimum overlap of 4 to 6 inches for fusion welding. For extrusion welding, the FML shall overlap a minimum of 6 inches on each side.

3.1.8.4 Seam Preparation

Seams must be prepared so that:

- Prior to seaming, the seam area will be clean and free of moisture, dust, dirt, debris of any kind, and foreign material.
- Seam overlap grinding (for extrusion welding only) will be completed according to the Manufacturer's instructions and in a way that does not damage the FML.
- Seams will be aligned with the fewest possible number of wrinkles and "fishmouths".

3.1.8.5 Seaming Equipment

The approved processes for field seaming of the FML is double track fusion or extrusion welding. Proposed alternate processes will be documented and submitted to the Owner or CQA Consultant for concurrence.

The apparatus used for welding the major seams will be equipped with gauges indicating the temperature in the apparatus or at the application point. The CQA Monitor will observe apparatus temperatures and ambient temperatures prior to the machine beginning a new seam.

The CQA Monitor will observe that:

- Equipment used for seaming is not likely to damage the FML;
- The extruder is purged prior to beginning a seam until the heat-degraded extrudate has been removed from the barrel;
- The electric generator is placed on a smooth base such that minimal damage occurs to the FML;
- A smooth insulating plate or fabric is placed beneath the welding apparatus after usage;
- The FML is protected from damage in heavily trafficked areas.
- One spare operable seaming device shall be maintained on site at all times.
- A small movable piece of FML may be used directly below the FML overlap that is to be seamed to prevent buildup of water and/or moisture between the FML sheets. The FML piece is slid along the overlap as the seaming progresses. This piece is removed when the seam is completed.

3.1.8.6 Weather Conditions for Seaming

The typical weather conditions required for seaming are as follows:

- No seaming shall be attempted above 104º F ambient air temperature or below 32º F ambient air temperature, without approval. Ambient temperature shall be measured 12 inches above the liner.
- In all cases, the FML shall be dry and protected from wind damage.
- The CQA Monitor will observe the seaming techniques appropriate for the prevailing weather conditions are employed and will advise the Owner or CQA Manager of deviations. The final decision as to whether or not seaming may be performed will be made by the Owner or CQA Manager.
- Seaming shall not be performed during any precipitation event unless the Installer erects satisfactory shelter to protect the FML areas for seaming from water and/or moisture.

400 ANN ST. NW, SUITE 201A
GRAND RAPIDS, MICHIGAN 49504
PHONE: (616)458-8052

- Seaming shall not be performed in areas where ponded water has collected above or below the surface of the FML.

If the Installer wishes to use methods which may allow seaming at ambient temperatures below 32°F or above 104°F, the Installer will demonstrate and certify that the methods and techniques used to perform the seaming produce seams which are entirely equivalent to seams produced at temperatures above 32°F and below 104°F, and that the overall quality of the FML is not adversely affected.

The CQA Monitor will document the following items:

- Ambient temperature at which seaming is performed.
- Any precipitation events occurring at the site, including the time of such occurrences, the intensity, and the amount of the event.

The CQA Manager will inform the Owner if seaming during unsuitable weather conditions is being performed. The Owner will stop or postpone the FML seaming when conditions are unacceptable.

3.1.8.7 Test Seams

Test seams will be prepared each day prior to commencing FML field seaming. Test seams will be made at the beginning of each seaming period and a minimum of once every five hours of continuous welding for each seaming apparatus/operator combination used that day. Additional test seams may be required at the discretion of the CQA Manager.

The test seam sample will be at least three feet long by one foot wide with the seam centered lengthwise. Six adjoining one-inch wide specimens will be die cut from the seam sample. The specimens will be immediately tested by the FML installer with a tensiometer in the field for both peel (3 specimens) and shear (3 specimens). If any of the test seam specimens for FML fail to meet the acceptance requirement in Appendix A then the entire operation will be repeated. If the additional test seam fails, the seaming apparatus will not be accepted and will not be used for seaming until the deficiencies are corrected and two consecutive successful full test seams are achieved. Test seam failure is defined as failure of any one of the specimens tested in shear or peel. The CQA Monitor will observe all test seam procedures.

400 ANN ST. NW, SUITE 201A
GRAND RAPIDS, MICHIGAN 49504
PHONE: (616)458-8052

3.1.8.8 General Seaming Procedure

Unless otherwise specified, the general seaming procedure used by the FML Installer shall be as follows:

- If required, a moveable protective layer of plastic may be placed directly below each overlap of FML that is to be seamed. The purpose of the protective layer is to prevent any moisture build-up between the sheets to be welded. No protective layers may be left beneath the FML
- Seaming shall extend to the outside edge of panels to be placed in anchor trenches.
- If required, a firm substratum should be provided by using a flat board or similar hard surface directly under the seam overlap to achieve proper support.
- Fish mouths or large differential wrinkles at the seam overlaps should be cut along the ridge of the wrinkle to achieve a flat overlap. The cut fishmouths or wrinkles will be seamed over the entire length and will then be patched with an oval or round patch of the same type of FML extending a minimum of 6 inches beyond the cut in all directions.
- If seaming operations are to be conducted at night, adequate illumination will be provided.

The CQA Monitor will observe that the above seaming procedures (or any other procedures agreed upon) are followed, and will inform the Owner and CQA Manager if they are not.

3.1.9 Seam Testing

The FML Installer will non-destructively test all field seams over their full length for continuity. Continuity testing shall be performed ASTM D5820 using seam pressure tests for double track fusion welded seams in accordance with. Vacuum box tests shall be performed for single track fusion welded seams, and extrusion welded seams in accordance with ASTM D5641. The purpose of this testing is to check the continuity of seams; it does not provide information on seam strength. Continuity testing will be done as the seaming work progresses. The CQA Monitor will:

- Observe all continuity testing;
- Record location, date, test unit number, name of tester, and outcome of all testing; and,
- Inform the FML Installer of any required repairs.

400 ANN ST. NW, SUITE 201A
GRAND RAPIDS, MICHIGAN 49504
PHONE: (616)458-8052

The FML Installer will complete any required repairs in accordance with Section 3.1.10. If repairs are required, the CQA Monitor will:

- Observe the repair and the retesting of the repair;
- Mark on the FML that the repair has been made; and,
- Document the repair, location and retesting results.

All seams must be constructed in a fashion that allows them to be non-destructively tested. Any patches, seams around liner penetrations, or seams near sharp corners must be capped or patched with FML of sufficient size to allow non-destructive testing of the seams. Boots and collars may be inspected visually.

The seam number, date of observation, name of tester, and outcome of the test or observation will be recorded by the CQA Monitor.

Seam Pressure Test Procedure:

- The seam pressure test is designed to detect leaks of double-wedge thermally welded seams where an air chamber exists between the seams. After the seam has been fabricated for a given length, both ends of the air chamber are sealed. A needle attached to a pressure gauge/air valve assembly is inserted into the air chamber and air pressure is applied. The gauge is monitored for drop in air pressure over time as an indicator of seam leaks. Seams shall be tested using the minimum acceptance criteria listed in Appendix A.
- The initial starting pressure may be read after a two minute "relaxing" period, which will allow the air within the chamber to reach ambient liner temperature. The final pressure will then be read at the conclusion of the test. If the pressure loss does not exceed the acceptance criteria listed in Appendix A, then the seam is considered to have passed the nondestructive test. The end of the seam opposite the pressure gauge will then be cut open to observe that the entire seam length has been tested. If the pressure does not drop upon the opposing end being cut the blockage will be found to identify the section of seam tested. The remainder of the seam will then be tested as stated above.
- If failure occurs (i.e., pressure reduction over the scheduled time period is greater than the maximum allowable), the end seals will be checked and the seam retested. If failure recurs, the exposed fusion area will be visually observed and a soapy solution shall be

applied over the pressurized seams to locate leaks. If leak areas are located, these areas will be patched and pressure tested on both sides of the patched area. The patched area will be vacuum tested.

Vacuum Box Test Equipment consists of:

- A vacuum box assembly of a rigid housing, a transparent viewing window, a soft neoprene gasket attached to the bottom, a port hole or valve assembly, and a vacuum gauge;
- A steel vacuum tank and pump assembly equipped with a pressure controller and pipe connections;
- A rubber pressure/vacuum hose with fittings and connections; and,
- A soapy solution (mild detergent).

The following procedures shall be performed for vacuum testing:

- Energize the vacuum pump.
- Wet a strip of FML to be tested with the soapy solution.
- Place the vacuum box over the wetted area.
- Close the bleed valve and open the vacuum valve.
- Maintain a vacuum pressure of at least 5 psig.
- Check that a leak tight seal is created.
- For a period of not less than 10 seconds, examine the FML through the viewing window for the presence of soap bubbles.
- If no bubble(s) appears after 10 seconds, close the vacuum valve and open the bleed valve. Move the box over the next adjoining area with a minimum 3-inch overlap, and repeat the process.
- All areas where leaks are observed will be marked and repaired in accordance with Section 3.1.10.

400 ANN ST. NW, SUITE 201A
GRAND RAPIDS, MICHIGAN 49504
PHONE: (616)458-8052

3.1.9.1 Destructive Seam Strength Testing

Locations and Frequency:

- The CQA Monitor will select the locations where seam samples are to be cut for laboratory testing. The sampling should be established as follows:
    - A minimum frequency of one test location per 500 feet of production seam length per welding machine.
    - Additional test locations may be selected during seaming at the discretion of the CQA Manager. Selection of such locations may be prompted by suspicion of excess crystallinity, contamination, offset welds, or any other potential cause of inadequate welding.
- The FML Installer will not be informed in advance of the locations where the seam samples will be taken.

Sampling Procedures:

- Samples will be die cut by the FML Installer as the seaming progresses to have laboratory test results before completion of liner installation. The CQA Monitor will:
    - Observe sample cutting;
    - Assign a number to each sample and mark it accordingly;
    - Record the sample location on a layout drawing; and,
    - Observe field tensiometer testing performed by the FML Installer and record test data.
- Holes in the FML resulting from destructive seam sampling will be immediately repaired by the FML Installer in accordance with repair procedures described in Section 3.1.10. The continuity of the new seams in the repaired area will be tested according to Section 3.1.9.

Size of Samples:

- The samples will be a minimum of 12 inches wide by approximately 42 inches long with the seam centered lengthwise. The sample will be cut into three parts and distributed as follows:
    - One portion to the FML Installer for testing, 12 in. x 12 in.

- One portion for CQA Manager for laboratory testing, 12 in. x 18 in.
- One portion to the Owner for archive storage, 12 in. x 12. in.
- Samples will be cut by the FML Installer at the locations designated by, and under the observation of, the CQA Monitor as the seaming progresses to obtain laboratory test results prior to completion of liner installation.

- The CQA Monitor will witness field tests and mark samples with their number. The CQA Monitor will also log the date, number of seaming unit, and pass or fail description.

Testing Requirements:

- Laboratory testing of seams will commence as soon as possible after the destructive seam samples are received. A minimum of five specimens should be tested each for shear and peel, for a total of ten destructive tests per destructive sample. The shear and peel testing of the seams should be conducted according to ASTM D-6392.
- Pass/Fail Criteria for FML for destructive samples can be found in Appendix A.

Procedures for Destructive Test Failure:

- The following procedures will apply whenever a sample fails the field destructive test. The FML Installer shall cap strip the seam between the failed location and two passed laboratory test locations using the procedures described in Section 3.1.10. Cap-stripping involves applying a strip of FML, a minimum distance of 6 inches on all sides of the defective seams, and seaming it to the sheet material by extrusion welding.
- All acceptable reconstructed seams must be bounded by two passing laboratory test locations, (i.e., the above procedure should be followed in both directions from the original failed location). The only exception is if all seams produced by the defective welder have been reconstructed to a point it can no longer be followed in the failing direction. One laboratory test must be taken within the reconstructed area if the failed length exceeds 250 feet.
- The CQA Monitor will observe and note actions taken in conjunction with destructive test failures.

3.1.10 Defects and Repairs

3.1.10.1 Identification

Seams and non-seam areas of the FML will be evaluated by the CQA Monitor for identification of defects, holes, blisters, undispersed raw materials, and signs of contamination by foreign matter. Because light reflected by the FML aids in the detection of defects, the surface of the FML shall be clean at the time of visual observation. The FML surface should be broomed or washed if the amount of dust or mud inhibits observation and testing.

3.1.10.2 Evaluation

Each suspect location, both in seam and non-seam areas, will be non-destructively tested. Each location that fails the non-destructive testing will be marked by the CQA Monitor and repaired by the FML Installer.

3.1.10.3 Repair Procedures

Any portion of the FML exhibiting a flaw, or failing a destructive or nondestructive test shall be repaired. Repair procedures should be agreed upon between the Owner, the FML Installer, and the CQA Manager. Unless otherwise agreed, the repair procedures will be as follows:

- Defective seams will be repaired by reconstruction.
- Tears or holes will be repaired by patching.
- Pinholes will be repaired by applying an extrudate bead to the prepared surface.
- Blisters, larger holes, undispersed raw materials, and contamination by foreign matter will be repaired by patching.
- Patches shall be round or oval in shape, made of the same material as the FML, and extend a minimum of 6 inches beyond all edges of the defect. Patches will be applied using the approved method as required in the specifications.
- All seams made in repairing defects will be subjected to the same non-destructive test procedures as outlined for all other seams.

3.1.10.4 Seam Reconstruction Procedures

Seam sections that need repair due to overheating, burn holes, and unseamed areas shall be reconstructed by cap stripping with the same FML material. Cap stripping involves applying a strip of FML, respectively, a minimum distance of 6 inches on all sides of the defective seams, and seaming it to the sheet material by extrusion welding. Large caps may be of sufficient extent

to require destructive seam sampling and testing, at the discretion of the CQA Monitor. The FML below large caps should be appropriately cut to avoid water or gas collection between the two sheets.

3.1.10.5 Documentation of Repairs

Each repair will be non-destructively tested using the methods described in Section 3.1.9, as appropriate. Repairs, which pass the non-destructive test, will be taken as an indication of an adequate repair. Repairs, which fail, will be redone and retested until a passing test is achieved. The CQA Monitor will observe all non-destructive testing of repairs.

3.2 Non-Woven Geotextile

Every roll of geotextile delivered to the site must be manufactured and inspected by the Geotextile Manufacturer, according to the following requirements:

- The geotextile must be properly labeled.
- The geotextile must be free of holes and any other sign of contamination by foreign matter.

Each geotextile roll, for use at the landfill facility, shall be marked by the Geotextile Manufacturer with the following information and in the following manner:

- Name of Manufacturer (or supplier)
- Style and type number
- Roll length and width
- Batch (or lot) number
- Date of manufacture
- Roll number

The Geotextile Manufacturer must provide a written certification accompanying all material shipments stating that their product meets all manufacturing specifications and passes all requirements and specifications listed in this CQA Plan. The Manufacturer shall also provide Quality Control documentation and results of testing that the material specified in this section meets or exceeds the requirements of the specifications and CQA Plan.

400 ANN ST. NW, SUITE 201A
GRAND RAPIDS, MICHIGAN 49504
PHONE: (616)458-8052

3.2.1 Transportation, Handling, and Storage

Transportation of the geotextile is the responsibility of the Manufacturer, the Installer, or other party as decided by the Owner. All handling on-site after unloading is the responsibility of the Installer. The CQA Monitor will monitor or document the following with regard to the geotextile:

- Each geotextile roll is labeled with a roll number and a batch (lot) number;
- Rolls delivered to the site are free from defects and/or damage;
- The adequacy of on-site handling of equipment to minimize risk of damage to both the geotextile and underlying geosynthetic materials; and,
- The careful handling of the geotextile by the Installer's personnel.

The CQA Monitor will indicate/report to the Owner any rolls or portions thereof, which in the opinion of the CQA Monitor should be rejected and removed from the site because of visually obvious flaws; or rolls that include flaws, which may be repairable.

Selected samples of the geotextile material may be obtained by the CQA Manager for physical testing to document that the geotextile material tested satisfies the minimum material property requirements established in Appendix B.

3.2.2 Installation

Placement of the geotextile shall be conducted in accordance with the manufacturer's recommendations and with the direction provided herein. Any deviations from these procedures must be pre-approved by the CQA Manager.

The Geotextile Installer shall install the geotextile in such a manner that it is not damaged in any way.

The CQA Monitor shall observe and document that each of the above steps are performed by the Installer. Any noncompliance with the above requirements shall be reported by the CQA Monitor to the CQA Manager.

3.2.3 Geotextile Seaming

Seaming of the geotextile may be performed by one of three methods: sewing, thermal bonding or approved gluing.

3.2.4 Damage Repair

Any tears or other defects in the geotextile will be repaired by placing a patch extending a minimum of 12 inches beyond the edges of the hole or tear. The patch will be secured by heat tacking. If the tear or other defect width is more than 50 percent of the roll width, the damaged area will be cut out and replaced with new geotextile material. The CQA Monitor will examine and document that the repair of any geotextile is performed according to the above procedure.

3.3 Double-Sided Geocomposite

3.3.1 Transportation, Handling, and Storage

Every roll of geocomposite delivered to the site must be manufactured and inspected by the Geocomposite Manufacturer, according to the following requirements:

- The geocomposite must be properly labeled.
- The geocomposite must be free of holes and any other sign of contamination by foreign matter.

Each geocomposite roll, for use at the landfill facility, shall be marked by the Geocomposite Manufacturer with the following information and in the following manner:

- Name of Manufacturer (or supplier)
- Style and type number
- Roll length and width
- Batch (or lot) number
- Date of manufacture
- Roll number

The Geocomposite Manufacturer must provide a written certification accompanying all material shipments stating that their product meets manufacturing specifications and passes requirements and specifications listed in this CQA Plan. The Manufacturer shall also provide Quality Control documentation and results of testing that the material specified in this section meets or exceeds the requirements of the specifications and CQA Plan.

Transportation of the geocomposite is the responsibility of the Manufacturer, the Installer, or other party as decided by the Owner. All handling on-site after unloading is the responsibility of

the Installer. The CQA Monitor will monitor or document the following with regard to the geocomposite:

- Each geocomposite roll is labeled with a roll number and a batch (lot) number;
- Rolls delivered to the site are free from defects and/or damage;
- The adequacy of on-site handling of equipment to minimize risk of damage to both the geocomposite and underlying geosynthetic; and,
- The geocomposite is handled in a manner to minimize damage.

The CQA Monitor will indicate/report to the Owner any rolls or portions thereof, which in the opinion of the CQA Monitor should be rejected and removed from the site because of visually obvious flaws; or rolls that include flaws, which may be repairable.

Selected samples of the geocomposite material may be obtained by the CQA Manager for physical testing to document that the geocomposite material tested satisfies the minimum material property requirements established in Appendix C.

3.3.2 Installation

Placement of the geocomposite shall be conducted in accordance with the manufacturer's recommendations and with the direction provided herein. Any deviations from these procedures must be pre-approved by the CQA Manager.

- The Geocomposite Installer shall install the geocomposite in such a manner so that it is not damaged in any way.
- The panels will be orientated in the direction of the slope to minimize seams on the slope
- Panels will be overlapped in the direction of flow to facilitate drainage.
- If the cover material is a geomembrane or other geosynthetic, precautions shall be taken to prevent damage to the geocomposite by restricting heavy equipment traffic. Unrolling the geosynthetic can be accomplished through the use of lightweight, rubber-tired equipment such as a 4-wheel all-terrain vehicle (ATV). This vehicle can be driven directly on the geocomposite, provided the ATV makes no sudden stops, starts, or turns.

The CQA Monitor shall observe and document that each of the above steps are performed by the Installer. Any noncompliance with the above requirements shall be reported by the CQA Monitor to the CQA Manager.

3.3.3 Geocomposite Panel Seaming

The following requirements shall be met with regard to overlapping and joining of geocomposite rolls:

- Adjacent rolls shall be overlapped a minimum of 4 inches.
- The overlaps will be shingled to facilitate drainage.
- The overlaps shall be secured by tying to each other at a minimum of five foot spacing.
- The overlap at butt seams will be 12 inches and the geocomposite will be secured by tying at 6-inch spacing.
- Plastic fasteners shall be used to tie the geonet component. The plastic ties shall be white or brightly colored for easy identification. Metallic ties shall not be used in any circumstances.
- The geotextile portion of the geocomposite will be sewn together using a contrasting colored thread for easy inspection.

3.3.4 Damage Repair

Any tears or other defects in the geocomposite will be repaired by placing a patch extending a minimum of 2 feet beyond the edges of the hole or tear. The patch will be secured to the original geocomposite by tying every 6 inches. If the tear or other defect width is more than 50 percent of the roll width, the damaged area will be cut out and replaced with new geocomposite material. The CQA Manager will examine and document that the repair of any geocomposite is performed according to the above procedure.

3.4 Cap Integrity System

3.4.1 Below-Cap Stone Collectors

Stone collectors shall be a 2”-3” washed river gravel with the minimum dimensions indicated on the approved construction drawings. Location of the stone corridors is indicated on the approved construction drawings. Each proposed stone collector will be located by survey prior to construction. Record surveys will be completed on each stone corridor after installation is complete. GLOBAL CHANGE – just say approved construction drawings

3.4.2 Cap Integrity Piping

The piping material shall meet the specifications as described in the approved construction drawings to include material type, diameter, and wall thickness. Piping shall be installed in

accordance with industry standards and the approved construction drawings. Location of the piping is indicated on the approved construction drawings. Location of the piping shall be located by survey prior to installation, with record survey completed after installation.

3.4.3 Strip Drains

The strip drains shall be a 1" by 12" strip drain as indicated on the approved construction drawings. Strip drains shall be placed at approximate 75 foot spacing or as indicated on the approved construction drawings. Strip drains shall be installed in accordance with industry standards and the approved construction drawings. Location of the strip drains shall be located by survey prior to installation, with an as-built survey completed after installation.

3.4.4 Access Roads

The access roads will have a top deck width of approximately 10 feet with a minimum stone thickness of 24 inches and shall be constructed in accordance with the temporary cap and cover integrity system construction drawings. Access roads shall be installed on locations indicated on the temporary cap and cover integrity system construction drawings with corresponding stripping areas (approximately 20 feet wide) below the geosynthetics. Location of the access roads shall be located by survey prior to installation, with record survey completed after installation.

3.4.5 Perimeter Collection Trench

A Perimeter Collection Trench shall be excavated around the project limits as shown on the approved construction drawings. The trench will be excavated to a "typical" depth of 4 feet but may vary to support positive drainage. The trench will be backfilled with the 2"-3" washed river gravel. Location of the Perimeter Collection Trench will surveyed and recorded on the record drawings. Trench depths will be documented on an approximated 100' spacing.

3.4.6 Perimeter Collection Sumps

With the Perimeter Collection Trench, a series of Collection Sumps will be installed at locations shown on the approved construction drawings. Locations and depths will be documented and included on record drawings.

Collection Sumps will be installed using an excavator and backfilled with 2"-3" washed river gravel. The collection sumps shall also have an access pipe for installation of a pump for removal of liquids as shown on the approved construction drawings.

3.5 Storm Water Management

The approved construction drawing has an approved storm water management plan prepared by Cornerstone Environmental Group.

The CQA firm shall document that the storm water management system is constructed in accordance with the approved plan. Components of documentation should include culvert location, sizes, storage ponds, ditches and other features required by the approved plan. Information shall be included in the record drawings.

400 ANN ST. NW, SUITE 201A
GRAND RAPIDS, MICHIGAN 49504
PHONE: (616)458-8052

APPENDIX A
TEMPORARY COVER FLEXIBLE MEMBRANE LINER

RAVEN
INDUSTRIES

TO: Republic Services

SUBJECT: Raven X60FC1 QA testing methods and frequency (rev. 3)

DATE: April 12, 2013

IN REFERENCE TO: Bridgeton Landfill project, Bridgeton, MO

Raven X60FC1 geomembrane and its components undergo an extensive array of testing and measurement during the manufacturing process. The required tests, methods, and sampling frequency are based on the requirements set forth in GRI GM 13 ('Test Methods, Test Properties and Testing Frequency for High Density Polyethylene (HDPE) Smooth and Textured Geomembranes')

The minimum test values for X60FC1 using these test methods are listed the table provided with this letter.

Clint Boerhave

Clint Boerhave
Quality Manager
Raven Industries - Engineered Films Division

Test methods, minimum values, and test frequency for Raven X60FC1

Properties	Test Method	Test Value	Testing Frequency (minimum)
Thickness mils (min. ave.) • lowest individual for 8 out of 10 values • lowest individual for any of the 10 values	D 5994	50 mils 45 mils 35 mils	per roll
Asperity Height mils (min. ave.)	GM 12	10 mils	per roll
Tensile Properties (3) (min. ave.) • break strength – lb/in. • MD break elongation - % (min. avg.) • TD break elongation - % (min. avg.)	6693 Type IV	 75 200 30	20,000 lb
Tear Resistance – lb (min. ave.)	D 1004	27	45,000 lb
Puncture Resistance – lb (min. ave.)	D 4833	55	45,000 lb
Oxidative Induction Time (OIT) (min. ave.) (a) Standard OIT — or — (b) High Pressure OIT	 D 3895 D 5885	 100 400	200,000 lb

RAVEN INDUSTRIES

STATEMENT OF PERFORMANCE

SUBJECT: Raven X60FC1

IN REFERENCE TO: Seam testing minimum values and material separation in plane (SIP)
Republic Services Landfill cap project - Bridgeton, Missouri
SO# 195942-195948, 195950-195954

DATE: April 5, 2013

Absolute Barrier™ X60FC1 is a seven layer co-extruded textured geomembrane consisting of polyethylene with a core layer designed specifically as a barrier against radon, methane and VOCs on brownfield sites, residential and commercial buildings, and geomembrane containment and covering systems. A robust stabilization package provides long-term protection from thermal oxidation and ultraviolet degradation in exposed applications.

Due to the multilayer construction and the presence of a barrier core in this product, some separation in plane may occur during destructive seam testing. This is normal and should not be of concern as long as the tested peel and shear results meet the minimum values for this product:

Hot Wedge Seams	Minimum value
Shear Strength (lb/in)	80
Peel Strength (lb/in)	60
Extrusion Fillet Seams	
Shear Strength (lb/in)	80
Peel Strength (lb/in)	52

Clint Boerhave

Clint Boerhave
Quality Manager
Engineered Films Division

APPENDIX B
NON-WOVEN GEOTEXTILE

6 oz/sy Nonwoven Geotextile
Conformance Testing Summary

Properties	Test Method	Manufacturer QC Test Frequency(2)	Conformance QA Test Frequency	Required Test Values
Mass/Unit Area (min. ave.)	ASTM D5261	1 per 100,000 sf	N/A	6.0 oz/sy
Apparent Opening Size (max.)	ASTM D4751	1 per 540,000 sf	N/A	0.212 mm 70 (U.S. Sieve)
Grab Strength (min. ave.)	ASTM D4632	1 per 100,000 sf	N/A	160 lbs
Puncture Strength (min. ave.)	ASTM D4833/D6241	1 per 100,000 sf	N/A	95 lbs
UV Resistance	ASTM D4355	1 per resin formulation	N/A	70% (3)
Permittivity (min.)	ASTM D4491	1 per 540,000 sf	N/A	1.63 sec^{-1}

Notes:

(1) AOS and Permittivity shall only be tested for geotextiles used in filter applications.
(2) Manufacturer may elect to provide certification of values for geotextiles.
(3) After 500 hours of exposure.

APPENDIX C
DOUBLE-SIDED GEOCOMPOSITE

Geocomposite
Conformance Testing Summary

Properties	Test Method	Manufacturer QC Test Frequency	Conformance QA Test Frequency	Required Test Values
Geonet Component:				
Transmissivity, (min)	ASTM D4716	1 per 100,000 sf	N/A	$2x10^{-3}$ m^2/sec
Thickness (min)	ASTM D5199	1 per 100,000 sf	N/A	220 mils
Density (min)	ASTM D1505	1 per 100,000 sf	N/A	0.94 g/cm^2
Tensile Strength (min)	ASTM D5035	1 per 100,000 sf	N/A	45 lb
Carbon Black Content (min)	ASTM D1603	1 per 100,000 sf	N/A	2 to 3 %
Geotextile Component:				
Nominal 6 oz/sy non-woven – see Appendix B for specifications				
Geocomposite:				
Transmissivity, (min)[(1)]	ASTM D4716	1 per 100,000 sf	N/A	$1x10^{-4}$ m^2/sec
Ply Adhesion, (min)	ASTM D7005	1 per 100,000 sf	N/A	0.5 lb/in

Notes:

Transmissivity shall be measured using a seat time of 15 minutes, a load of 10,000psf, and a gradient of 0.1.

Comment 3: Section 3.1.8.3 Overlapping, please specify the minimum panel overlap for the flexible membrane liner (FML).

The FML panels shall have a minimum overlap of 4 to 6 inches for fusion welding. For extrusion welding, the FML shall overlap a minimum of 6 inches on each side. Section 3.1.8.3 of the CQA plan has been revised accordingly.

Comment 4: Section 3.1.8.7 Test Seams, states "Test seams will be made at the beginning of each seaming period and a minimum of once every five hours of continuous welding for each seaming apparatus used that day." Please specify if the test seams will be each seaming apparatus/operator combination.

Section 3.1.8.7 of the CQA plan has been revised to specify that tests seams are required for each seaming apparatus/operator combination.

Comment 5: Section 3.4.6 Perimeter Collection Sumps/Rock Chimneys, please remove rock chimneys from the section title.

Rock Chimneys have been removed from section title. Section 3.4.6 of the CQA Plan has been revised accordingly.

Comment 6: The literature provided in Appendix A states the testing requirements and specifications for the selected FML material is a 50 mil textured LLDPE. Previous submittals and correspondences have indicated that the outer layers of the FML will consist of 60 mil textured HDPE. Please explicitly state what the FML cap material will be made of and submit the accompanying testing information accordingly. This information must be consistent with each submittal.

During the preliminary material selection discussions for the geomembrane to be utilized on this project, an EVOH geomembrane with a "nominal" thickness of 60 mil was discussed. The final product chosen for this project consists of a geomembrane with an EVOH core layer for vapor control and outer layers of HDPE for UV protection in an exposed application. This geomembrane will have a minimum average thickness of 50 mil which includes the EVOH layer and the

other layers of HDPE. There was an incorrect identification in the Raven Industries correspondence for this material in the previous submission. Appendix A contains the revised letter along with the testing requirements for the EVOH with HDPE outer layers (X60FC1).

We trust that the information provided in this response is sufficient for your needs. For your convenience, an updated copy of the proposed CQA plan has been attached.

Sincerely,

Weaver Boos Consultants





Mark A. Moyer
Senior Project Manager

Ali Hashimi, P.E.
Certifying Engineer

Encl: Temporary Cap and Cap Integrity System CQA Plan, Revision No. 1

WEAVER
BOOS
CONSULTANTS

APPENDIX B

DRAFT BIRD MITIGATION PLAN

Bridgeton Landfill, LLC

BIRD HAZARD MONITORING AND MITIGATION PLANS

DRAFT

July 26, 2013
REVISED: October 7, 2013

Prepared by:
Civil and Environmental Consultants, Inc.
Indianapolis, Indiana

Bridgeton Landfill, LLC
Bird Hazard Monitoring and Mitigation Plans

This Bird Hazard Monitoring and Mitigation Plan has been prepared for Bridgeton Landfill to summarize the steps that will be taken to ensure compliance with 10 CSR § 80-3.010(4)(B)1 and 40 CFR § 258.10, the terms of the Negative Easement and consistent with discussions with the City of St. Louis Lambert-St. Louis Airport (Airport). While not required by the Agreed Order, Bridgeton Landfill has summarized in this Plan the relevant bird hazard monitoring and mitigation measures that are or will be incorporated into the construction plans for the work projects addressed by the North Quarry Action Plan. The original compilation was prepared for the convenience of the Airport in its review. The Airport supplied comments on August 28, 2013 which have been addressed in this revised version.

This Plan addresses measures applicable to installation of temperature monitoring probes, installation of gas extraction and installation of the EVOH capping system and appurtenant features in the North Quarry of the Bridgeton Landfill. Each of these tasks has already been conducted in the South Quarry of the Bridgeton Landfill. As expected, no incidents of bird hazards were observed by the US Department of Agriculture – Wildlife Services (USDA) during the South Quarry operations. During these previous operations, the USDA logged observations that the exhumed waste was largely unattractive to birds relative to the surrounding foraging environment during that timeframe. Bridgeton Landfill and the Airport understand that additional bird deterrent measures may be necessary for the North Quarry invasive activities depending on the type of waste uncovered and the timeframe of waste removal and transport. Therefore, this Plan proposes to incorporate the same materials management measures as previously used with additional proposed contingency measures to actively identify, mitigate for, and report any potential bird hazards. These actions, coupled with continued cooperation with the Airport are intended to ensure that these activities, when conducted in the North Quarry, continue to be performed in a manner that does not present bird hazard conditions.

An additional remedy considered as part of the North Quarry Action Plan is the installation of the isolation break between the North Quarry and the radiological materials in West Lake OU-1, Area 1. Such a project would involve excavation of waste material and would require that appropriate bird hazard monitoring and mitigation be evaluated in advance of and during such activity. Because appropriate measures are dependent upon the construction details, including depth and volume of excavation and the schedule for construction, a bird hazard monitoring and mitigation plan will be prepared separately when that work plan is created.

Coordination with Airport

In order to ensure ongoing compliance with applicable requirements and provide for optimal coordination on monitoring and mitigation, Bridgeton Landfill will continue to provide Airport representatives with updates on site work as needed based upon changes in site conditions or planned activities. Bridgeton Landfill will also continue to provide the Airport with applicable work plans in advance of initiation of landfill activities in order to allow for evaluation of sufficiency of bird monitoring and mitigation measures.

DRAFT

In advance of initiation of work under the contingent work plans, Bridgeton Landfill will notify the airport of the planned schedule and initiation so that appropriate monitoring can be assessed. Additionally, as a Contingency Plan, all excavation activities in the North Quarry will include monitoring of bird activity to identify bird hazards real time by a trained biologist, immediately accessible mitigation measures, and periodic reporting to the Airport. Monitoring needs will be assessed by a trained biologist and conducted by a trained biologist or representatives trained to monitor for identified site-specific conditions. For purposes of this planning, monitoring and evaluation, Bridgeton Landfill has hired experts with Civil Environmental Consultants, Inc. ("CEC") and will also continue the ongoing coordination with the Airport Authority and its internal and external experts. A statement of the qualifications of the CEC experts and staff can be provided upon request. Specific details of how the Action Plan will be implemented can be found in the sections below.

Mitigation Measures for TMP Installation:

Minimal waste removal is expected due to the limited volume of waste removed for TMP installation. However, to ensure this activity does not pose a risk of bird attractant, the following steps will be employed, over and above the process undertaken during installation of existing TMPs.

Odor Management during Drilling

1. Each TMP will be installed as quickly as possible to minimize the amount of time the borehole is exposed. To minimize the amount of time trash is exposed, no borehole will be started that cannot be completed without breaks (either end of the day or a lunch break).

Control Measures during Handling and Transportation of Excavated Wastes

1. The solid waste excavated during the North Quarry activities will be placed in a roll-off container or dump truck to transport to the Bridgeton transfer station, located on-site. The container or dump truck will be tarped following placement of waste for transport to the on-site transfer station.
2. In all cases, the waste must be covered with an odor control product in the container used for transport. If wastes require mixing, the product will be applied following mixing if odors persist from the waste materials. The product must be applied to completely cover the mixed wastes with a thin coating.

Solid wastes removed from the TMP installation will be handled the same way the drill cuttings have previously been handled at the Bridgeton Landfill. Monday through Friday until 6:00 PM, spoils will be transported from the work area to the on-site transfer station as they are excavated. Bridgeton Landfill will not excavate after 6:00 PM Monday through Friday. This spoil-handling procedure will also occur on Saturday until 1:00 PM. After 1:00 PM on Saturday, and all day on Sunday (if work is being performed), excavation spoils will be placed in a lined roll-off box. Once the container is full, it will be covered to minimize any odors from escaping the box. The

DRAFT

roll-off box will be stored on-site until Monday morning when it will be direct hauled to the nearby Roxana Landfill.

The transfer station, located on-site, is an active facility with a covered roof and large garage doors open only during working hours and closed when not in use. The current heavy use by truck traffic unloading and loading waste and the covered roof have served and will continue to serve as adequate bird deterrents. Additional use by a periodic truck unloading waste from the North Quarry activities should not create bird hazards that are currently non-existent at the transfer station.

The process described above was the successful handling process utilized for the prior activities, based upon the approval of St. Louis County. Provided St. Louis County approves this process again, the proposed monitoring and mitigation plan is how excavated materials will be managed for this project. If St. Louis County does not approve this waste handling approach, roll-off boxes will be staged to receive the waste, and those roll-off boxes will then be transported to Roxana Landfill the following day. This process would still include the same materials handling methods as noted above (spray on product, cover with tarps, etc.) only the material will be stored in lined roll-off boxes.

As requested by the Airport, additional daily on-site bird hazard monitoring, mitigation, and reporting are proposed as follows:

<u>Daily Monitoring and Reporting</u>

1. TMP installation will be monitored by a trained biologist or his designee for bird activity during active excavation.
2. Any identified bird hazard will be mitigated for using the control measure outlined below.
3. Daily bird hazards and control activities will be documented using the following form. Monthly summaries will be made available to the Airport and for periodic review by the USDA.

DRAFT

TMP Installation Bird Control Log

Date	Time	Location	Species	Number	Control Method	Comments	Initials

Control Measures during Handling and Transportation of Excavated Wastes

1. Active control measures, if needed, require knowledge of the proper equipment to be used, understanding of the species of birds being dispersed, and an understanding of the concept of escalating tactics without overuse.
2. If a bird hazard is identified, pyrotechnics will be available for the trained biologist or his designee to use. These are essentially "fire crackers" that are launched from a hand-held device. These rounds produce either a scream or secondary report that will disperse most species of birds. A .15 mm cal pistol that can launch both bangers and screamers will be used to reduce habituation (a condition where birds get used to a particular dispersal effort and simply quit responding).

Monitoring and Mitigation Measures for Gas System Expansion

Limited waste removal is expected during modification of existing and installation of new gas extraction wells. In order to ensure this activity does not pose a risk of bird attractant, the following steps will be employed, consistent with the process undertaken during installation of existing gas extraction wells.

Odor Management during Drilling

1. Each gas extraction well will be installed or modified as quickly as possible to minimize the amount of time the borehole is exposed. No borehole will be started that cannot be completed without breaks (either end of the day or a lunch break).
2. During drilling, a vacuum box will be installed and operated at the borehole location to collect as much gas as possible during the drilling operations.
3. The vacuum will be applied to the Vacuum Drilling Box via a small blower. The exhaust of this blower will be connected to carbon vessels that will remove the odors.

Control Measures during Handling and Transportation of Excavated Wastes

1. The solid waste excavated during gas extraction well activities will be placed in a roll-off container or dump truck to transport to the Bridgeton transfer station, located on-site. The container or dump truck will be tarped following placement of waste for transport to the on-site transfer station.

2. In all cases, the waste must be covered with an odor control product in the container used for transport. If wastes require mixing, then the product will be applied following mixing if odors persist from these waste materials. The product must be applied to completely cover the mixed wastes with a thin coating.

Solid waste removed from the gas extraction well installation will be handled the same way the drill cuttings have previously been handled at the Bridgeton Landfill. Monday through Friday until 6:00 PM, spoils will be transported from the work area to the on-site transfer station as they are excavated. Bridgeton Landfill will not excavate after 6:00 PM Monday through Friday. This spoil handling procedure will also occur on Saturday until 1:00 PM. After 1:00 PM on Saturday, and all day on Sunday (if work is being performed), excavation spoils will be containerized in a lined roll-off box. Once the container is full, it will be covered to minimize any odors from escaping the box. The box will be stored on-site until Monday morning when it will be direct hauled to the nearby Roxana Landfill.

The process described above was the successful handling process utilized for the prior activities, based upon the approval of St. Louis County. Provided St. Louis County approves this process again, this proposed monitoring and mitigation plan is how excavated materials will be managed for this project. If St. Louis County does not approve this waste handling approach, roll-off boxes will be staged to receive the waste, and those roll-off boxes will then be transported to Roxana Landfill the next following day. This process would still include the same materials

DRAFT

handling methods as noted above (spray on product, cover with tarps, etc.) only the material will be stored in lined roll-off boxes.

As requested by the Airport, additional daily on-site bird hazard monitoring, mitigation, and reporting are proposed as follows:

Daily Monitoring and Reporting

1. Gas extraction well installation will be monitored by a trained biologist or his designee for bird activity during active excavation.
2. Any identified bird hazard will be mitigated for using the control measure outlined below.
3. Daily bird hazards and control activities will be documented using the following form. Monthly summaries will be made available to the Airport and for periodic review by the USDA.

Gas Extraction Well Installation Bird Control Log

Date	Time	Location	Species	Number	Control Method	Comments	Initials

Control Measures during Handling and Transportation of Excavated Wastes

1. Active control measures, if needed, require knowledge of the proper equipment to be used, understanding of the species of birds being dispersed, and an understanding of the concept of escalating tactics without overuse.
2. If a bird hazard is identified, pyrotechnics will be available for the trained biologist or his designee to use. These are essentially "fire crackers" that are launched from a hand-held device. These rounds produce either a scream or secondary report that will disperse most species of birds. A .15 mm cal pistol that can launch both bangers and screamers will be used to reduce habituation (a condition where birds get used to a particular dispersal effort and simply quit responding).

Monitoring and Mitigation for EVOH Cap Installation

Minimal waste is expected to be generated from construction of the temporary cap project. Solid waste may be generated during the installation of the perimeter collection sumps or other components that require small, short-lived excavations. It is anticipated that approximately 10 feet of soil cover underlain by solid waste will be disturbed. Therefore, a 10-foot depth of solid waste with a three foot diameter at each perimeter collection sump could generate approximately 2.6 bank cubic yards of solid waste from each sump location. During the excavation of solid waste, the material will be placed directly into lined roll-off containers or in a haul truck provided by Bridgeton Landfill. The following handling and transportation measures would be employed, consistent with the measures undertaken for sump installation for the existing EVOH cap.

Control Measures during Handling and Transportation of Excavated Wastes

1. The excavated wastes will be placed in a roll-off container or dump truck to transport to the on-site Bridgeton transfer station. The container or dump truck will be tarped following placement of waste.
2. In all cases, the waste must be covered with an odor control product in the container used for transport. If wastes require mixing, then the product will be applied following mixing if odors persist from these waste materials. The product must be applied to completely cover the mixed wastes with a thin coating.

The process described above was the successful handling process utilized for the prior activities, based upon the approval of St. Louis County. Provided St. Louis County approves this process again, this proposed monitoring and mitigation plan is how excavated materials will be managed for this project. If St. Louis County does not approve this waste handling approach, roll-off boxes will be staged to receive the waste, and those roll-off boxes will then be transported to Roxana Landfill the next following day. This process would still include the same materials handling methods as noted above (spray on product, cover with tarps, etc.) only the material will be stored in lined roll-off boxes.

As requested by the Airport, additional daily on-site bird hazard monitoring, mitigation, and reporting are proposed as follows:

DRAFT

Daily Monitoring and Reporting

1. The EVOH cap installation will be monitored by a trained biologist or his designee for bird activity during active excavation.
2. Any identified bird hazard will be mitigated for using the control measure outlined below.
3. Daily bird hazards and control activities will be documented using the following form. Monthly summaries will be made available to the Airport and for periodic review by the USDA.

EVOH Cap Installation Bird Control Log

Date	Time	Location	Species	Number	Control Method	Comments	Initials

Control Measures during Handling and Transportation of Excavated Wastes

1. Active control measures, if needed, require knowledge of the proper equipment to be used, understanding of the species of birds being dispersed, and an understanding of the concept of escalating tactics without overuse.
2. If a bird hazard is identified, pyrotechnics will be available for the trained biologist or his designee to use. These are essentially "fire crackers" that are launched from a hand-held device. These rounds produce either a scream or secondary report that will disperse most species of birds. A .15 mm cal pistol that can launch both bangers and screamers will be used to reduce habituation (a condition where birds get used to a particular dispersal effort and simply quit responding).

Monitoring and Mitigation Measures for New Detention Basin

A new detention basin has been constructed to handle increased flow during rain events. According the calculations below, a 25-year storm event will fill the basin approximately 0.43 acre with 5.65 feet of water that will take 123.7 minutes (approximately two hours) to drain.

Summary for Pond Prop NE Pond: Prop NE Pond

Inflow Area = 6.029 ac,100.00% Impervious, Inflow Depth = 6.00" for 25 year adj event
Inflow = 44.80 cfs @ 11.91 hrs, Volume= 3.014 af
Outflow = 12.82 cfs @ 12.12 hrs, Volume= 2.991 af, Atten= 71%, Lag= 12.3 min
Primary = 12.82 cfs @ 12.12 hrs, Volume= 2.991 af

Routing by Dyn-Stor-Ind method, Time Span= 0.00-120.00 hrs, dt= 0.01 hrs
Peak Elev= 482.42' @ 12.12 hrs Surf.Area= 0.391 ac Storage= 1.144 af

Plug-Flow detention time= 123.7 min calculated for 2.991 af (99% of inflow)
Center-of-Mass det. time= 118.2 min (836.3 - 718.1)

Volume	Invert	Avail.Storage	Storage Description
#1	479.35'	1.732 af	**Custom Stage Data (Prismatic)** Listed below

Elevation (feet)	Surf.Area (acres)	Inc.Store (acre-feet)	Cum.Store (acre-feet)
479.35	0.315	0.000	0.000
484.00	0.430	1.732	1.732

Device	Routing	Invert	Outlet Devices
#1	Primary	479.40'	**18.0" Round Culvert** L= 30.0' Ke= 0.500 Inlet / Outlet Invert= 479.40' / 479.20' S= 0.0067 '/' Cc= 0.900 n= 0.012, Flow Area= 1.77 sf

The future detention basin is designed with a soil bottom and will require periodic cleaning for silt removal that prevents vegetation from establishing.

The detention basin will drain into an approximately 6-acre retention pond that, according to aerial imagery, has been in existence for approximately 20 years. The retention pond was designed as stormwater retention for a hauling company located adjacent to the landfill. The

water contribution to the existing retention basin from the new detention area will be negligible. A similar sized stormwater retention area for two large existing warehouses exists west of the landfill that is established with vegetation and shallow water that presents a much more habitable area for birds to forage and nest than the new detention basin. Birds are expected to inherently be more attracted to the retention pond area as opposed to the detention pond on the Bridgeton Landfill.

The bird hazard threat to the Airport posed by the new detention basin is negligible by itself and when compared to existing conditions. However, as a Contingency Plan, additional on-site bird hazard monitoring, mitigation, and reporting for the new retention basin are being proposed as follows:

Monitoring and Reporting after a Rainfall Event and Periodic Inspection

1. During active excavation, the new detention basins will be monitored by a trained biologist or his designee after a rain event for bird activity.
2. Any identified bird hazard will mitigated for using the control measures outlined below.
3. Bird hazards and control activities will be documented using the following form. Monthly summaries will be made available to the Airport and for periodic review by the USDA.

DRAFT

Retention and Detention Basin Bird Control Log

Date	Time	Location	Species	Number	Control Method	Comments	Initials

4. After excavation activities are complete, a long term designated on-site landfill staff person will be trained in bird hazard identification and the detention basins will be monitored by this person.

APPENDIX C

INSTALLATION PLAN FOR NEW TEMPERATURE MONITORING PROBES (TMPs)

ENGINEERING FOR A BETTER WORLD

FEEZOR ENGINEERING, INC.

INSTALLATION PLAN FOR ADDITIONAL TEMPERATURE MONITORING PROBES (TMPs)

BRIDGETON LANDFILL

BRIDGETON, ST. LOUIS COUNTY, MISSOURI

Prepared For:
Bridgeton Landfill, LLC
13570 St. Charles Rock Road
Bridgeton, MO 63044

October 4, 2013
Revised November 7, 2013

Project No.: BT-017



Prepared By:

P.J. Carey & Associates
5878 Valine Way
Sugar Hill, GA 30518

Feezor Engineering, Inc.
3405 Hollenberg Drive
Bridgeton, MO 63044
Missouri Professional Engineer
Number 030292

INSTALLATION PLAN FOR ADDITIONAL TEMPERATURE MONITORING PROBES (TMPS)

BRIDGETON LANDFILL

PREPARED FOR:

BRIDGETON LANDFILL, LLC

Prepared by

P.J. Carey & Associates, P.C.

Sugar Hill, Georgia

10/4/2013

Revised 11/7/2013

TABLE OF CONTENTS

1.1 INTRODUCTION 1
1.2 PROPOSED DEVICES 1
1.3 INSTALLATION 1

FIGURES (APPEAR AT THE END OF THE REPORT)

FIGURE 1 – TMP LOCATION PLAN & DETAILS (FULL SIZE DRAWING)

1.1 INTRODUCTION

This report has been prepared to address the requirements of installation of additional temperature monitoring devices in the waste at the Bridgeton Landfill. The proposed temperature monitoring system has been developed based discussions with the MDNR and the installation and operation of the existing 14 TMP units within in the South Quarry area. A total of 3 thermocouple strings with a thermocouple not less than every 20 vertical feet are proposed. Potential locations of the proposed devices are depicted in Figure 1. However, at the present time the locations are the subject of ongoing negotiations. The proposed methods of installation and equipment are based on temperature monitoring at this and other landfills experiencing elevated temperatures.

1.2 PROPOSED DEVICES

The measuring devices proposed are type T thermocouples of the type successfully used under similar circumstances for this purpose. Thermocouples were found to have longer in ground lifetimes than thermistors. The thermocouples will consist of 20 gauge type T wire with Teflon coating. The junctions will be pre formed by the supplier and wires cut to length prior to delivery. Wires will be inserted into an abrasion resistant sheath with each junction at the prescribed depth prior to installing sheath in a bore hole. A steel, fiberglass or other rigid rod will be used to stand the assembly in the hole while the casings are extracted. The entire assembly will be grouted in place with a cement bentonite grout. A typical arrangement is also shown in Figure 1. Each wire will be labeled with a crimped on numbered band to identify it. Upon completion of the installation, the leads will be attached to a readout terminal box with each lead numbered the same as the crimped on band. Details for the terminal box and conduit seals are provided in Figure 1.

1.3 INSTALLATION

The strings of thermocouples encased in the abrasive sheath will be inserted inside drill rods that are advanced to the target depths. The drill rods will be advanced using roto-sonic drilling techniques without sampling. Given the additional TMPs will be installed in areas not yet experiencing elevated temperatures, no sampling or special drilling procedures are required. Borings will be advanced to the target depth of the bottom of the proposed unit. Based on the TMP measurements taken within the South Quarry the bottom of the additional TMPs has been based on the following:

- For total waste thickness of 80 feet or less, to the quarry floor.
- For total waste thickness of greater than 80 ft but less than 120 feet, to within 20 feet of the quarry floor
- For total waste thickness depths greater than 160 ft, to within 40 feet above the quarry floor but not exceeding 180 feet in depth

No less than 3 thermocouples will be installed in any TMP and thermocouple spacing will not exceed 20 feet in the vertical direction. The closest unit to the surface will typically be 20 feet below grade but not less than 15 feet. In the event the less than 20 foot distance is used the CPVC conduit will be shortened

accordingly. A preliminary depth of installation table is attached. The proposed units will have approximately 16 thermocouples in total.

Any cuttings from the boring program will placed in a dumpster and disposed offsite and at a permitted facility.

TABLE 1

Bridgeton Lanfdill
Temperature Monitoring Points
Approximate Depths and Schedule of Instruments

To be adjusted once drill pad elevation is surveyed

Name	Northing	Easting	Approx GS El.	Approx. Quarry Bottom	Approx Depth of Boring
			using 2013 Aerial	Qbott based on 79 topo	see text for conditions
TMP-16	1068015.974	516246.2459	465	409	56
TMP-17	1068293.98	516224.8327	511	400	91
TMP-18	1068410.805	516430.2642	518	320	158
			Minimum Anticipated Drilling footage		**305**

FIGURE

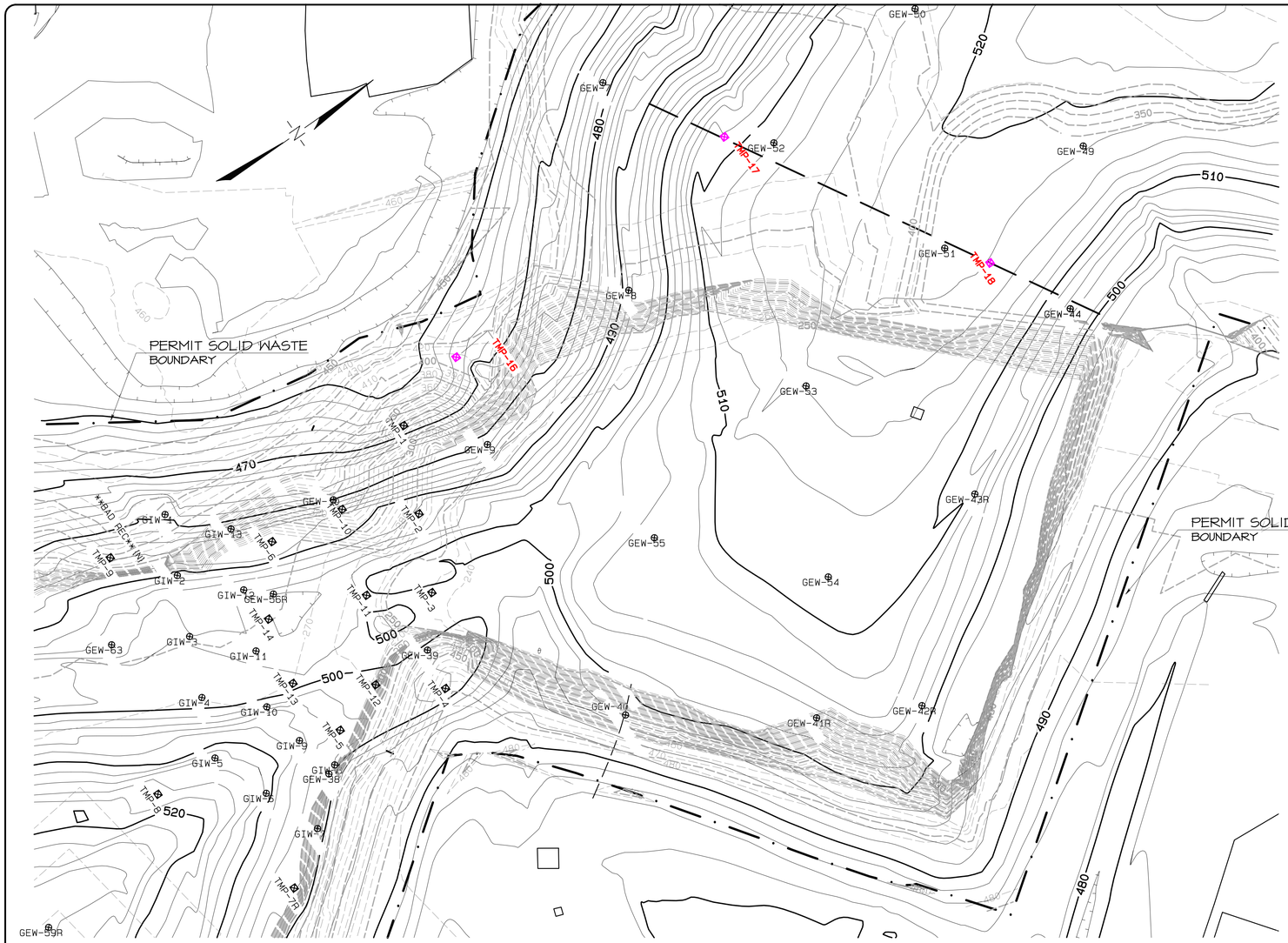

PLAN VIEW

GRAPHIC SCALE 1"=50'

0 50 100 150

POINTS TO BE INSTALLED BY DRILLING

PROPOSED TMP Coordinates Listing

North	East	Elev	Name
1068015.9735	516246.2459	464.92	TMP-16
1068293.9804	516224.8327	511.33	TMP-17
1068410.8052	516430.2642	517.74	TMP-18

*Elevations are approximate

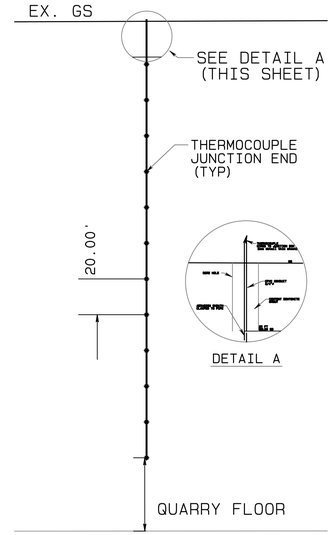

DETAIL A

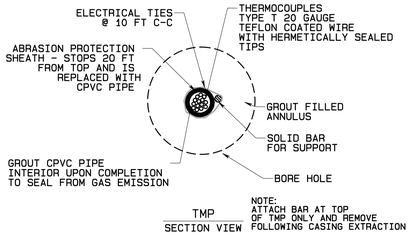

TMP SECTION VIEW

NOTE: ATTACH BAR AT TOP OF TMP ONLY AND REMOVE FOLLOWING CASING EXTRACTION

LEGEND

- EXISTING TOPOGRAPHIC CONTOUR
- QUARRY BOTTOM CONTOUR
- GAS WELL
- EXISTING TMP
- ADDITIONAL TMP (TMP-20)

NOTES:

TMPs TO BE INSTALLED AT APPROXIMATE LOCATIONS SHOWN
TMPs DEPTHS TO QUARRY FLOOR OR REFUSAL FOR TOTAL WASTE DEPTHS < 80' FOR TOTAL WASTE DEPTH EXCEEDING < 120' A 20' DEPTH ABOVE THE QUARRY FLOOR IS ACCEPTABLE. FOR TOTAL WASTE DEPTHS > 160 FEET A 40 ' DEPTH ABOVE THE QUARRY FLOOR IS ACCEPTABLE.
A SCHEDULE OF THE DEPTH OF EACH UNIT AND THERMOCOUPLE TIP DEPTHS WILL BE PROVIDED FOLLOWING THE CONSTRUCTION OF DRILL PADS

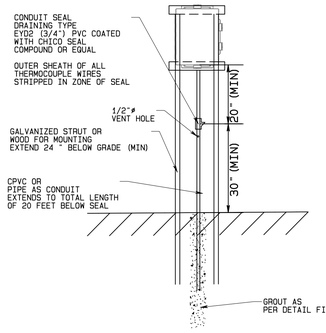

NOTE
ALL CONDUIT CONNECTIONS TO BOX TO BE NEMA 4 RATED

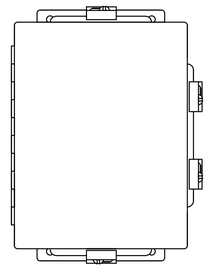

PANEL
Right Hand Mount
using JIC Swing - Out Panel Kit
all external connections NEMA 4
PANEL to be drilled for Rotary
Switch mounting and plug in for readout units
See cut sheet for dimensions

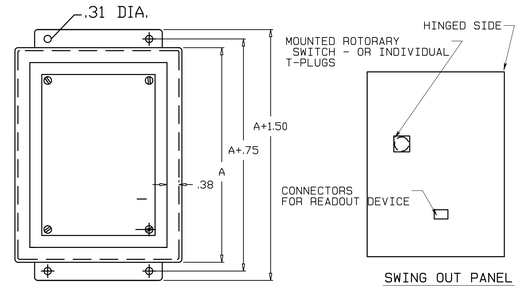

SWING OUT PANEL

FRONT VIEW WITH NO COVER AND CLAMPS REMOVED

NOTES:

ENCLOSURE SHOW IS AUSTIN ELECTRICAL ENCLOSURE
AB-10 x 10 x 6 - PANEL IS AB-1010JP
WITH JIC SWING OUT PANEL KIT - MOUNTED WITH HINGE ON RT.

HOLE FOR ROTARY SWITCH TO ACCOMODATE SW142-** SWITCH 2 POLE PANEL CUTOUT OUT 92 mm² FACE HEIGHT PROTRUDES 28 mm (REQUIRED CLEARENCE WHEN DOOR IS SHUT

SWITCH TO BE MOUNTED LEFT OF CENTER TO ALLOW FULL ACCESS TO CONNECTIONS WHEN PANEL IS SWUNG OPEN

PROVIDE ADEQUATE SLACK IN THERMOCOUPLE WIRES TO ALLOW EASY ASSEMBLY

PROVIDE QUICK RELEASE TOGGLES INSTEAD OF SCREWS FOR PANEL DOOR

ALL PERFORATION AND CLAMPS NEMA 4 RATED

TMP DETAILS

BRIDGETON LANDFILL, LLC

DATE
REVISION
1 2 3 4 5

P. J. CAREY & ASSOCIATES, P.C.
5078 VALLINE WAY, SUGAR HILL, GA. 30518

PROJ. NO.: 179.003
DATE: 11/7/2013
DESIGNED BY: PJC
DRAWN BY: PJC/KLCH
CHECKED BY: PJC
APPROVED BY: PJC

PROPOSED TMP LOCATION PLAN &DETAILS

PROPOSED TMP INSTALLATION
BRIDGETON LANDFILL

DRAWING
CPTMP-1

SHEET 1
OF 1

APPENDIX D

RATE OF SSE MOVEMENT

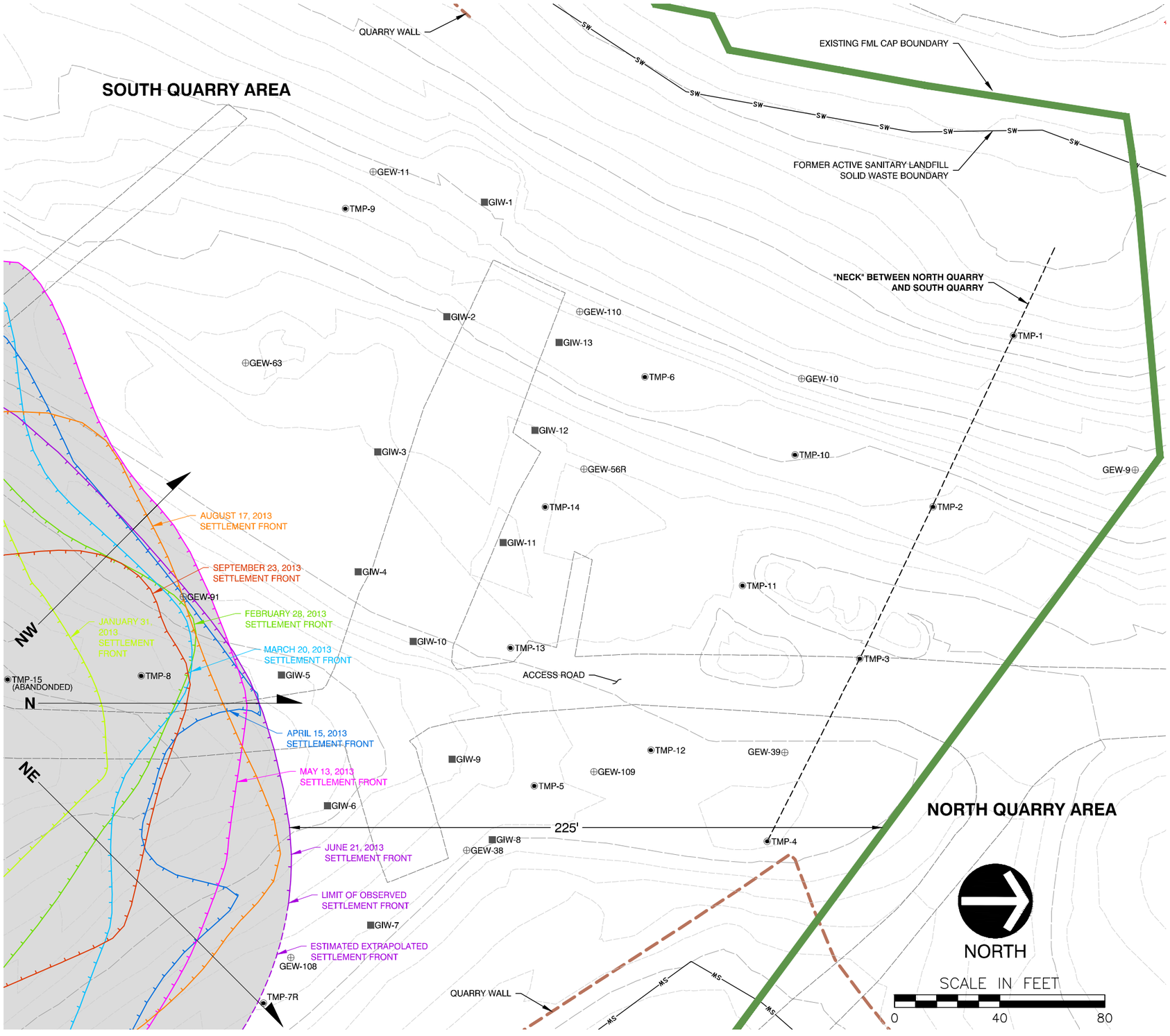

VECTOR DATA

DATE RANGE (ALL 2013)	1/31-2/28	2/28-3/20	3/20-4/15	4/15-5/13	5/13-6/21	7/25-8/17	8/17-9/23	TOTAL	AVERAGE MOVEMENT (FEET/DAY)
NO. OF DAYS	28	20	26	28	38	57	37	234	
NE VECTOR (FT)	15	8	46	0	33	-24	-63	102	0.06
N VECTOR (FT)	28	1	30	-5	5	-14	-18	59	0.12
NW VECTOR (FT)	29	6	8	14	-13	7	-21	44	0.13
							OVERALL AVERAGE		0.10

NOTES

1. SETTLEMENT FRONT DEFINED AS LINE OF EQUAL RATE OF SETTLEMENT 1.35 FEET PER 30 DAY PERIOD.
2. NO SETTLEMENT FRONT DEPICTED FOR THE MONTH OF JULY DUE TO LIMITED SURVEY ACCESS DURING CONSTRUCTION ACTIVITIES.

LEGEND

- ⊕GEW-40 — EXISTING LFG EXTRACTION WELL (GEW)
- ◉TMP-8 — EXISTING TEMPERATURE MONITORING PROBE (TMP)
- ■GIW-6 — EXISTING GAS INTERCEPTOR WELL (GIW)
- —SW— — EXISTING SOLID WASTE BOUNDARY
- EXISTING QUARRY HIGHWALL
- EXISTING FML CAP BOUNDARY
- VECTOR DATA LINE

REFERENCE

1. TOPOGRAPHIC INFORMATION BASED UPON BRIDGETON LANDFILL– DTM.DWG PROVIDED BY COOPER AERIAL SURVEYS CO., DATED FEB. 2013. SURVEY FIELD SUPPLEMENTED BY WEAVER BOOS CONSULTANTS.
2. AERIAL IMAGERY PROVIDED BY EAST WEST GATEWAY COORDINATING COUNCIL OF MISSOURI AND ILLINOIS, COLLECTED IN LATE FEBRUARY AND EARLY MARCH OF 2012.

SETTLEMENT MOVEMENT MAP

DRAWN BY:	MSP	CHECKED BY:	MRB	APPROVED BY:	DRAFT	APPENDIX:	D
DATE:	OCT. 2013	DWG SCALE:	1"=40'	PROJECT NO:	131-178.0001		

P:\2013\131-4841-CAD\DWG\SOLIDWASTE\131178-ACTION_PLAN-APPENDIX_D.DWG LAST SAVED BY:(MSPEAKE) - 10/4/2013 8:53:48 AM, LAST PRINTED BY:(PEAKE, MONTE) - 10/4/2013 8:54:24 AM