December 19, 2013

Ms. Charlene Fitch, P.E.
Solid Waste Management Program
P.O. Box 176
Jefferson City, Missouri 65102-0176

Dear Ms. Fitch:

Subject: Bridgeton Landfill: Four (4) One Million Gallon Leachate Tanks and Transport Disposal/Leachate Management, Permit Number 0118912, St. Louis County
CEC Project 130-484

Please find below our responses to the comments stated in your August 29, 2013 letter regarding the Four (4) One Million Gallon Leachate Tanks and Transport Disposal/Leachate Management Plan submitted to you on July 25, 2013. We believe these corrections and explanations should resolve the remaining outstanding issues. In addition to the responses below, we have enclosed revised documents for your review and approval. The package includes the following documents:

- Revised Interim Leachate Management Plan
- Revised Figure 1: Revised Interim Leachate Management Plan Processing Schematic
- Revised Figure 2: Interim Leachate Management Plan Site and Piping Layout
- Appendix E Addendum: Transfer Pump Drawings and Specifications, Thermal Oxidizer Drawings and Specifications

COMMENT RESPONSES:

1. *Page 1 of the revised ILMP states that two of the tanks will be temporarily used for storage and processing in an interim use before the pre-treatment plant is operational. Please explicitly state if the second set of tanks will be constructed prior to or as part of the PTP. In addition, please state that the entire secondary containment boundary will be constructed before the operation of any proposed tanks.*

   The second set of tanks will be constructed prior to the pre-treatment plant becoming operational. The secondary containment will also be installed before any tanks are operational. See revised explanation in ILMP Pg 1.

2. *Page 2 states that Appendices A-H were not changed and therefore not resubmitted. However, the Appendix H title has changed to "New 1 Million Gallon Tank Layout with the Interim Leachate Management System." Please submit this updated appendix.*

   Figure 2 (Revised Interim Leachate Management Plan – Tank Layout) replaces Appendix H from the original May 2013 plan and has been enclosed.

3. *Section 1 states the interim management system is being altered by removing frac tanks and increasing permanent storage. Please explicitly state when specific types of tanks will be removed (i.e., battery/sparge tanks, hazardous waste tanks, buffer tank system).*

   See revised management plan Sections 1 & 2 Pg 3-5 for detailed explanation of tanks.

4. *Section 3 does not indicate how the proposed tanks will control odors; however Sheet EN-7 shows odor control points on top of the tanks. Recent correspondences have indicated the use of a thermal oxidizer for emissions treatment. Please include details on the specific odor control mechanisms that will be employed for the proposed tanks if used as part of the treatment process.*

   See revised Section 3 Pg 7 for explanation of odor control equipment. Specifications for equipment have been included in Appendix E.

5. *Section 5 states that before the PTP is operational, two of the 1 million gallon tanks will be used for additional storage and aeration. Please state in more detail the types of treatment or aeration processes to be used within the million gallon tanks.*

   See revised Section 5.2. Note that the previous Section 5.2 is now 5.3.

6. *Section 5.1 uses the unit of gallons per hour. Please verify if this is the correct unit and make revisions necessary.*

   Units in Section 5.1 have been revised to gallons per minute instead of gallons per hour.

7. *Section 5.2 states that there is a single six inch pump that loads the dual load-out station. Please verify if there is one pump total or one pump dedicated to each load-out.*

   One pump is dedicated to each load-out. See revised Section 5.3.

8. *The 97k gallon tank was previously the collection point for this facility's leachate. With the upgrades to the leachate management system, leachate has been directed from the facility's perimeter force mains to the improved system in the amphitheater. Please state if the old line has been rerouted to the perimeter force main or has been turned off completely.*

   The old line has been disconnected. See Section 5.3 for full explanation of pipe routing.

9. *The submittal did not indicate how or how often the tanks will be cleaned out to dispose of leachate sludge residue. Please include these details.*

   See new Section 5.4 for cleaning details.

10. *Please revise Figure 1 Revised Interim Leachate Management Plan Processing Schematic, to show the 20,000 gpd or the max allowable disposal to MSD direct discharging from the 97k gallon tank.*

    Figure 1 has been revised to show the current maximum allowable direct discharge disposal to MSD.

11. *Figure 1 shows leachate from the landfill being routed to a single million gallon tank; however, Figure 2 and several plan sheets show leachate routed to the tank farm and then to either the 316k tank or the million gallon tank. Please explicitly state and revise the necessary documents to show the routing of leachate when the proposed tanks are constructed and operational.*

    Figures 1 and 2 have been updated to depict final design flow paths.

12. *Sheet C300 indicates there will be an approximate 2.2 acre limit of disturbance. Please state if the necessary land disturbance permits have been obtained.*

    The required land disturbance permits have been obtained from the City of Bridgeton.

13. *The C Series plan sheets do not show any pumps to convey leachate through the depicted lines. Please state if all flow will be gravity flow. If not, please detail where the pumps will be located and for what purposes.*

    Pumps will be required to convey the leachate to the 316,000 gallon tank from the 1 million gallon tank and are indicated on Figure 2.

14. *The plan sheets show a line connecting the back ends (opposite of the blower system) of the proposed tanks. Please indicate the purpose of this line.*

    In the interim condition, this line will be used in the event additional storage is needed.

15. *The plan sheets show three catch basins within each individual tank containment area. Please state if there are valves to discharge rainwater to exterior stormwater design features or if water will be pumped into the proposed tanks.*

    The catch basins will have piping that will allow pumping to return the liquid to the tanks.

16. *Attachment C states that the sealant and coating of the tank may be compromised if total VOCs exceed 500 ppm. Recent records show the leachate from the landfill exceeds this threshold. Please note that it is Republic's responsibility to ensure the tanks are suitable and will be constructed to meet the required services.*

    Your comment is noted and based on the recommendations of the manufacturer, as was done on the 316,000 gallon tank, an upgrade has been made to make use of a special 732 Dow Corning Multi-purpose sealant based the manufacturers review of the leachate analysis. This 100% silicone mixture is pliable and has improved resistance and a large temperature range for usability. The roof sealant is number 864 NST sealant by Pecora Corporation, which is also consistent with the upgrade made at the 316,000 gallon tank.

The interim operations described in this plan and associated documents will be ready to implement on or around the end of January and will another step towards improving the current management of leachate. We appreciate the efforts and cooperation with MDNR and look forward to providing the design of the next phase in the coming weeks. Please feel free to contact us with any additional comments or questions you may have.

Sincerely,

CIVIL & ENVIRONMENTAL CONSULTANTS, INC.

Kevin T. Kamp, P.E.
Missouri PE#2006019670
Senior Project Manager

Randal F. Bodnar, P.E.
Arizona PE#48595
Vice President

Attachment 1 – Interim Leachate Management Plan (ILMP)
Attachment 2 – ILMP – Appendix E Addendum

STATE OF MISSOURI
KEVIN T. KAMP
NUMBER
PE-2006019670
12/19/13
PROFESSIONAL ENGINEER

Attachment 1

Interim Leachate Management Plan (ILMP)

ENGINEERING FOR A BETTER WORLD

FEEZOR

ENGINEERING, INC.

REVISED INTERIM LEACHATE MANAGEMENT PLAN

BRIDGETON LANDFILL

BRIDGETON, ST. LOUIS COUNTY, MISSOURI

Prepared For:
Bridgeton Landfill, LLC
13570 St. Charles Rock Road

December 18, 2013

Project No.: BT-011

STATE OF MISSOURI
DANIEL RICHARD FEEZOR
NUMBER PE-030292
PROFESSIONAL ENGINEER

12/18/13

Prepared By:

Feezor Engineering., Inc.
3405 Hollenberg Drive
Bridgeton, MO 63044
Missouri Professional Engineer
Number 030292

Revised Interim Leachate Management Plan

Bridgeton Landfill, LLC

Bridgeton Landfill is currently generating up to 240,000 gallons of liquids per day (leachate and landfill gas condensate). Hereinafter, the term leachate is used to describe the comingled mixture of landfill leachate and gas condensate. Chemical composition of the produced liquid typically includes a BOD concentration of approximately 20,000 mg/L (PPM) and 1,000-1,500 µg/L (PPB) total benzene. Due to previous BOD loadings to its system, the Metropolitan St. Louis Sewer District (MSD) initially suspended disposal of the liquids from the site via a direct discharge sewer connection. The MSD suspension resulted in the need for the Bridgeton Landfill to establish alternative disposal methods, under the auspices of an emergency Interim Leachate Management Plan. The narratives and attachments contained herein describe previous, current, and planned operations for interim leachate management.

Leachate has been and will continue to be treated to reduce total benzene concentrations using aeration and agitation (mixing and/or recirculation). Interim Leachate Management has been conceptually illustrated via flow charts submitted to the Missouri Department of Natural Resources (MDNR) in previous submittals. There are a number of challenges with the processing system. Timing available storage, allowing for adequate processing, following appropriate sampling protocols, complying with varied analytical requirements, and coordinating with multiple transportation companies and disposal sites continues to require diligent management of a complicated, evolving leachate handling system.

The early use of several series of frac tanks for leachate storage and processing was replaced by a 316,000-gallon tank that provides significantly increased batch aeration capacity. The 316,000-gallon tank will continue to play an important role in the leachate pre-treatment facility currently undergoing design, permitting, and construction work. Once operational, the pre-treatment facility will be tributary to the MSD sanitary collection system and will include four 1 million-gallon capacity tanks. All four 1 million-gallon capacity tanks will be constructed prior to the pre-treatment plant becoming operational, as will the entire secondary containment structure designed to encompass all four tanks. Operations of the pre-treatment plant before final facility construction will utilize only one of the tanks for leachate storage and pre-processing; a second tank would be utilized if additional capacity was warranted. The remaining two tanks will be used for other pre-treatment processes.

Bridgeton Landfill developed and implemented protocols to pre-treat (as necessary), transport, and dispose of leachate collected at the facility. Interim leachate management necessitated the following liquids handling programs:

1) Leachate Collection – collection and transfer of leachate from the landfill and gas condensate from the site's LFG system,

2) Leachate Storage – temporary storage of raw and processed leachate,

3) Leachate Processing – aeration of raw leachate to reduce concentrations of dissolved volatile organic compounds; additional technologies are under development, and

4) Leachate Disposal - logistical planning for transporting processed leachate to off-site facilities for disposal, using appropriate waste characterization, manifesting, and reporting procedures.

The Revised Interim Leachate Management Plan herein amends both the original May 2013 Interim Management Plan and the November 2013 Revised Interim Leachate Management Plan. **Figures 1** and **2** (Revised Interim Leachate Management Plan – Processing Schematic and Pre-Treatment Facility Layout, respectively) represent modified versions of the same drawings from the November 2013 submittal. Information regarding the current thermal oxidizer (TO) being used at the site, the TO proposed for incorporation into the pre-treatment facility, and the pump to be used to transfer pre-processed leachate from the 1 million-gallon capacity tank to the 316,000-gallon tank, is included in this document as an addendum to **Appendix E** of the November 2013 submittal.

1 LEACHATE COLLECTION

Leachate at Bridgeton Landfill is collected from numerous sources and transmitted from the collection points via fusion-welded high-density polyethylene (HDPE) piping. Gas condensate from the landfill gas control & collection system is co-mingled with leachate into an HDPE forcemain. As of December 2013, the following sources, each equipped with pumps, contribute to the leachate flow at the Bridgeton Landfill:

- 6 leachate collection sumps (LCS),
- 12 reinforced concrete pipe (RCP) structures,
- 13 gas interceptor wells (GIW),
- 20 header condensate traps (CT),
- 8 frac tanks used to capture artesian liquids,
- 5 horizontal collectors (HZ),
- 26 lateral sumps (LS),
- 4 trench sumps (TS),
- 25 perimeter sumps (PS),
- 35 perimeter extraction wells (PEW), and
- Approximately 50 vertical gas extraction wells (GEW).

Liquids are collected from the landfill under Permit 118912. No leachate is collected from the OU-1 Area. Daily production of liquids varies, but rates as high as 240,000 gallons per day have been calculated. The May 2013 layout of the Interim Leachate Management System was depicted in **Appendix A** of the original Plan submittal.

2 LEACHATE STORAGE

Historically, leachate storage for interim leachate management was provided by several series of tanks (portable and fixed) interconnected by either rigid or flexible piping/hoses. For the purposes of this Plan, the portable tanks are referred to herein as "frac tanks", a generic term for mobile steel tanks used to hold liquids such as stormwater, fuel, and leachate. They are typically constructed of single-wall carbon steel, have nominal capacities of 21,000 gallons, and are equipped with a single rear axle. The frac tanks can be moved (when empty) using construction equipment or trucks equipped with cables and winches. The frac tanks utilized for leachate storage and processing at Bridgeton Landfill meet the definition of "containers" under 40 CFR 262 and 265 and are compliant with applicable Missouri and federal hazardous waste management regulations.

Previously, leachate was conveyed to frac tanks from the co-mingled forcemain via combinations of HDPE piping and flexible hoses with cam-lock fittings. **Appendix B** of the original Plan submittal included HDPE pipe specifications. The use of frac tanks is currently limited to providing additional storage capacity of raw leachate and/or liquids generated during on-site leachate release response (i.e. impacted stormwater). As of December 2013, sixteen (16) frac tanks remain on-site and available for temporary storage. As many as 236 frac tanks were utilized at one point as part of the facility's leachate management system. The frac tanks were provided by Rain-for-Rent, Adler, and BakerCorp. **Appendix C** of the original Plan submittal included specifications for the various models/configurations of frac tanks utilized at the facility. The 16 tanks currently on-site were supplied by Rain-for-Rent.

The number and layout of frac tanks at Bridgeton Landfill changed over time as the needs for storage capacity changed. Initially, liquid comprised only of gas condensate was stored in several series of frac tanks interconnected using flexible hoses (see **Appendix D** of the original Plan submittal). Each of these tanks was eventually emptied, cleaned in accordance with the vendors' requirements, and removed from the facility (September 15, 2013).

Former tank batteries TB-1, TB-2, TB-3, TB-4, TB-7, TB-8, Sparge 1, and Sparge 2 were each comprised of 4 frac tanks manifolded together, and were used to aerate leachate as briefly described in the next section. TB-5 and TB-6 also consisted of 4 manifolded frac tanks each; they were not equipped for aeration but instead served as storage for leachate that had been processed to the point that there was no detectable benzene (<14 ppb). Batteries TB-1, TB-2, TB-3, and TB-4 remain at the facility, but they are no longer used for aeration (storage only). TB-5, TB-6, TB-7, TB-8, Sparge 1, and Sparge 2 were emptied, cleaned, disassembled, and removed from the site by September 30, 2013.

Another series of 24 frac tanks is still located at Bridgeton Landfill. These interconnected tanks are referred to as the Buffer Tank Farm (BTF), which serves as a 480,000-gallon

reservoir for raw leachate generated by the landfill. Leachate is currently pumped from the BTF to the 316,000-gallon tank for processing and loading on a daily basis. The BTF will continue to serve as a reservoir for untreated landfill liquids until the 1 million-gallon capacity tank has been tested and becomes fully operational. The BTF will be cleaned, disassembled, and removed from the site in similar fashion to the other frac tank assemblies once it has been replaced by the 1 million-gallon capacity tank (est 1Q2014).

The 316,000-gallon Aquastore tank was erected in early 2013. Concrete secondary containment has been constructed around the tank. The 316,000-gallon tank currently receives all untreated Bridgeton Landfill liquids via the BTF, processes the leachate (aeration and agitation) to reduce concentrations of benzene, and discharges the liquid once analysis indicates compliance. Liquid approved for disposal is either loaded out to tanker trucks or transferred to the 96,000-gallon tank described below.

A 96,000-gallon aboveground storage tank represents the original leachate holding tank at Bridgeton Landfill. This tank is still being utilized as a holding vessel for leachate that has been processed in the 316,000-gallon tank and transferred over via dual-contained piping. Concrete secondary containment encompasses the tank. Leachate approved for disposal is discharged from the 96,000-gallon tank to MSD's Missouri River Wastewater Treatment Plant. Discharge is metered from the tank to a nearby lift station.

3 LEACHATE PROCESSING

Frac tanks that were used for processing were retrofitted with piping to allow collected liquids to be aerated ("sparged") during the filling process. Sparge batteries consisted of four frac tanks connected to air compressors that delivered air to the aeration piping in each tank (18 psi). When the frac tank sparge batteries were being used, aeration was applied for a minimum of 5 hours. Batteries TB-1 through TB-4 (still on-site), Sparge 1, Sparge 2, TB-7, and TB-8 (since removed) were equipped for aeration; TB-5 and TB-6 (also since removed from the site) were not so equipped. Following aeration, samples were collected from the sparge batteries and submitted to an on-site laboratory for volatile organic analysis (8260).

During frac tank filling and aeration, the headspace in each sparge battery was under vacuum to allow for treatment of off-gas by an activated carbon system. Vacuum was maintained by 50 hp, 460V, 3 Ph centrifugal blowers that directed off-gas through 20,000 lbs of vapor phase carbon.

Processing of leachate in the 316,000-gallon tank currently follows the same principle as that used previously in the frac tanks, with an additional component. The 316,000-gallon tank relies on two Kaeser 433cfm blowers to aerate material that has been transferred from the BTF to the tank. The 316,000-gallon tank is also equipped with an MTS Jet Mix System used to recirculate the leachate in the tank. Tank headspace is under vacuum; off-gas is routed through a thermal oxidizer (TO) described shortly.

Operational sampling of the 316,000-gallon tank follows the same protocol as was employed for the former frac tanks. Current protocol dictates that the sample is acceptable for non-hazardous disposal if 8260 analysis indicates <300 ppb total benzene, with the exception of the Metropolitan St. Louis Sewer District (<140 ppb benzene acceptance limit) and the American Bottoms facility in Sauget, Illinois (<130 ppb benzene acceptance limit).

Off-gas from the 316,000-gallon tank is routed through a thermal oxidizer for destruction of volatile organics. The TO, manufactured by Intellishare Environmental, operates at air flow capacities of 400-1,200 scfm and temperatures ranging from 1,400°-1,600° F, with a VOC destruction efficiency of >98%. A thermal oxidizer with an air flow capacity of 5,000 scfm will be used to treat off-gas from the 1 million-gallon capacity tank once it becomes operational.

Appendix E of the original Plan submittal included specifications for the various leachate processing equipment utilized in the facility's leachate management system. Details regarding both of the aforementioned thermal oxidizers and the pump to be employed to transfer leachate from the 1 million-gallon capacity tank (under construction) to the 316,000-gallon tank has been included in this submittal as an addendum to the original **Appendix E.**

4 LEACHATE DISPOSAL

4.1 DISPOSAL FACILITIES

Once the processed leachate has been tested and approved for disposal, it is trucked as non-hazardous waste to various disposal facilities or direct discharged to MSD's sanitary system. Historically, the Bridgeton Landfill routed stored gas condensate to four hazardous waste facilities (see below). Hazardous waste shipments were completed in August 2013. Since that time, processed leachate has been disposed at more than a dozen non-hazardous treatment facilities. Currently utilized disposal facilities include MSD's Bissell Point facility, MSD's Missouri River plant, and American Bottoms wastewater treatment facility in Sauget, Illinois.

4.1.1 Hazardous Waste Disposal Facilities

Historically, leachate with total benzene concentrations over 500 ppb was disposed at the following facilities:

Clean Harbors Canada Inc.
4090 Telfer Road RR #1
Corunna, ON N0N 1G0

Clean Harbors Deer Park, LLC
2027 Independence Parkway South
La Porte, TX 77571

Clean Harbors Env. Services Inc.
2247 South Highway 71
Kimball, NE 69145

Clean Harbors of Baltimore, Inc.
1910 Russell Street
Baltimore, MD 21230

4.1.2 Non – Hazardous Waste Disposal Facilities

Non-hazardous disposal options are currently being provided by Metropolitan St. Louis Sewer District and the American Bottoms Regional Wastewater Treatment Facility:

MSD Bissell Point Wastewater Treatment Plant
10 East Grand Avenue
St. Louis, MO 63147

MSD Missouri River Wastewater Treatment Plant
3455 Creve Coeur Mill Road
Maryland Heights, MO 63043

American Bottoms
1 American Bottoms Road
Sauget, IL 62201

MSD's Bissell Point plant currently allows for up to 200,000 gallons per day to be disposed at the facility. Discharge to the MSD Missouri River plant is currently limited to 20,000 gallons per day. The Missouri River plant also has a maximum flow limitation of 1,500 gallons per hour. American Bottoms is currently accepting up to 30,000 gallons per day. Discharge to the Missouri River treatment plant uses a metering system on the 96,000-gallon tank to limit flow rate and 24-hour total flow. Leachate designated for disposal at Bissell Point and American Bottoms is loaded out of the 316,000-gallon tank and hauled by tanker truck.

MSD and American Bottoms approval protocols include operational sampling and on-site analyses to determine acceptable/unacceptable benzene and MEK concentrations, followed by confirmation sampling and off-site laboratory analyses of approved batches. MSD's acceptable benzene concentration is currently <140 ppb, but Bridgeton Landfill uses a 100 ppb threshold as a safety factor. American Bottoms uses <130 ppb benzene and <100,000 ppb MEK acceptance concentrations. Discharge to the Missouri River plant also requires compliance with a pH limit of >5.5 standard units.

4.2 Manifesting Procedures

Each load of processed leachate that leaves the facility is accompanied by a manifest completed by the generator (Bridgeton Landfill) and the transporting company. Hazardous loads previously hauled from the site also included completed Land Disposal Restriction forms. Manifests document information about the generator of the waste, the transporter of the waste, and the designated disposal facility for the waste. A generator's representative and a representative of the transportation company signs each manifest upon departure from the facility. A copy is kept on site. Once the transportation company delivers the load to the disposal facility, the disposal facility signs to accept the waste and keeps a copy of the manifest. Copies of the manifests with signatures from the disposal facilities are returned to the generator.

Data associated with the Interim Leachate Management System are abundant. Daily decisions are made based upon these data. Therefore, order and organization are imperative, and to achieve this, data throughout the process are collected and stored in a database that includes, but is not limited to, the following information:

- Dates of loading, transport, and disposal,
- Volumes of leachate processed,
- Batch identifiers,
- Filling and processing start / stop times,

- Amount transferred to the 96,000-gallon tank, if any, and times of transfer,
- Analytical testing results for each batch,
- Driver, vehicle, and load information,
- Manifest information

A leachate manager coordinates and schedules tasks associated with the collection, storage, processing, sampling/analysis, transporting, and disposal of the leachate. These tasks include, but are not limited to:

- Communicating with hauling companies and disposal facilities each day with information regarding number of loads, volume expected, and leachate quality,
- Review of completed manifests and loading tickets for completeness and accuracy,
- Collecting operational and/or confirmation samples and coordinating delivery to the laboratories,
- Review and distribution of analytical results,
- Optimizing component processes,
- Summarizing the day's issues/results and the planned efforts for the following day

5 One Million-Gallon Tank Interim Use

Bridgeton Landfill is currently designing, permitting, and constructing a pre-treatment facility which will be tributary to the MSD sanitary collection system. The pre-treatment plant will incorporate the use of four 1 million-gallon capacity tanks in the pre-treatment process. Initially, one of the 1 million-gallon capacity tanks will be used for storage and pre-processing (aeration and mixing), followed by transfer of the pre-processed material to the 316,000-gallon tank for additional aeration/mixing and load-out.

5.1 Leachate Flow from the Landfill to the 1 Million-Gallon Capacity Tank

A 1 million-gallon capacity aboveground storage tank (AST) will functionally replace the Buffer Tank Farm (described previously) as a leachate reservoir and will also serve to pre-process raw leachate before transferring it to the 316,000-gallon tank. Co-mingled leachate and gas condensate generated at the landfill will be routed to the 1 million-gallon capacity tank via dual-contained forcemain. Leachate will be subjected to the aeration and mixing processes described earlier, then transferred to the smaller tank for final polishing before approval and load-out. The proposed transfer pump will operate at an approximate pumping rate of 500 gpm @ 45 feet of total dynamic head. Although this rate is significantly less than that being employed now to fill the 316,000-gallon tank from the BTF (meaning it will take longer to fill the tank), the aeration time needed in the 316,000-gallon tank to achieve passable benzene concentrations is expected to be likewise significantly reduced since the material will have been pre-processed in the 1 million-gallon capacity tank. All piping outside of the secondary containment structures erected around the 1 million-gallon and 316,000-gallon tanks will be dual-contained. Piping inside the secondary containment structures will be single-walled and heat traced.

5.2 Pre-Treatment of Leachate in 1 Million-Gallon Capacity Tank

Each of the first two 1 million-gallon capacity tank will be equipped with an aeration system designed to apply the same basic technology as used in the original frac tank sparge batteries and in the 316,000-gallon tank being used now for treating leachate. Each 1 million-gallon capacity tank will be equipped with two blowers, each capable of applying 2,700 scfm of air to aerate liquids as they enter the tank, as the material resides in the tank, and during transfer to the 316,000-gallon tank. The design of each of the two 1 million-gallon capacity tanks to be used for pre-processing also incorporates a mixing system similar to that being used in the 316,000-gallon tank. The combination action of aeration and jetted mixing (recirculation) is designed to reduce concentrations of volatile organic compounds in the leachate, while at the same time hindering the accumulation of settleable solids in the tanks so equipped.

5.3 Leachate Flow from the 316,000-Gallon Tank to the 96,000-Gallon Tank

The 316,000-gallon tank is equipped with two 6-in ANSI pumps (Summit), each operating an independent loadout station. Another pump (Summit 6" ANSI Pump) has been installed to convey processed leachate to the 96,000-gallon tank from which the treated leachate is

being direct discharged to the MSD Missouri River Wastewater Treatment Plant. Dual-contained HDPE piping carries the leachate from the 316,000-gallon tank to the 96,000-gallon tank. The dual-contained piping represents the only liquid influent line connected to the smaller tank. There are two discharge connections (one out of the 96,000-gallon tank to the lift station and one out of the tank to the recirculating pump), but these are effluent points only. The previous forcemain used to transmit leachate from the landfill to the 96,000-gallon tank has been disconnected; a new forcemain that bypasses the 96,000-gallon tank has been installed.

The flow of leachate as described in this section was depicted graphically in **Appendix G** of the original Plan submittal. Modifications to the 316,000-gallon tank and associated piping changes associated with the 316,000-gallon tank, the 96,000-gallon tank, and the Buffer Tank Farm were described in **Appendix H** of the November 2013 Revised Plan submittal.

5.4 Cleaning of the 1 Million-Gallon Capacity Tank

Bridgeton Landfill performs periodic cleaning of the 96,000-gallon tank to remove accumulated solids since it appears that recirculation in this tank is limited in its mixing effectiveness. The 96,000-gallon tank was cleaned during April 2013 and again during November 2013. Cleaning services were provided by SET Environmental and Hunt Environmental in accordance with scopes of work provided to the landfill by the companies. Both events included performance of health and safety meetings, lock-out/tag-out procedures, vacuum removal of free liquids, confined space entry into the tank, sampling & waste characterization, vacuum removal of sludge, pressure rinsing, and final tank inspection. Solids removed during cleaning were properly characterized and ultimately disposed as non-hazardous waste.

The 316,000-gallon tank was first put into service in mid-June 2013. It will be inspected in mid-January 2014, and cleaned if warranted (solids will be disposed in an applicable fashion). An inspection, maintenance, and waste disposal plan and schedule will be developed for both the 316,000-gallon tank and the 1 million-gallon capacity tank(s) following the initial inspection of the 316,000-gallon tank in January 2014.

Appendices

Appendix A – Interim Leachate Management System Plan View Drawing (previously submitted)

Appendix B – HDPE Pipe and Appurtenances Information (previously submitted)

Appendix C – Frac Tank Information (previously submitted)

Appendix D – Interim Management Plan Tank Inventory (previously submitted)

Appendix E – Interim Leachate Management Plan Processing Equipment (previously submitted)

Appendix E Addendum – Additional Processing Equipment

Appendix F – The Metropolitan St. Louis Sewer District (MSD) - April 24, 2013 Emergency and Conditional Approval Letter (previously submitted)

Appendix G – Interim Leachate Management Process Flow Diagram (previously submitted)

Appendix H – (previously submitted)

Figures

Figure 1 – Revised Interim Leachate Management Plan Processing Schematic **(rev 12/2013)**

Figure 2 – Revised Interim Leachate Management Plan Tank Layout **(rev 12/2013)**

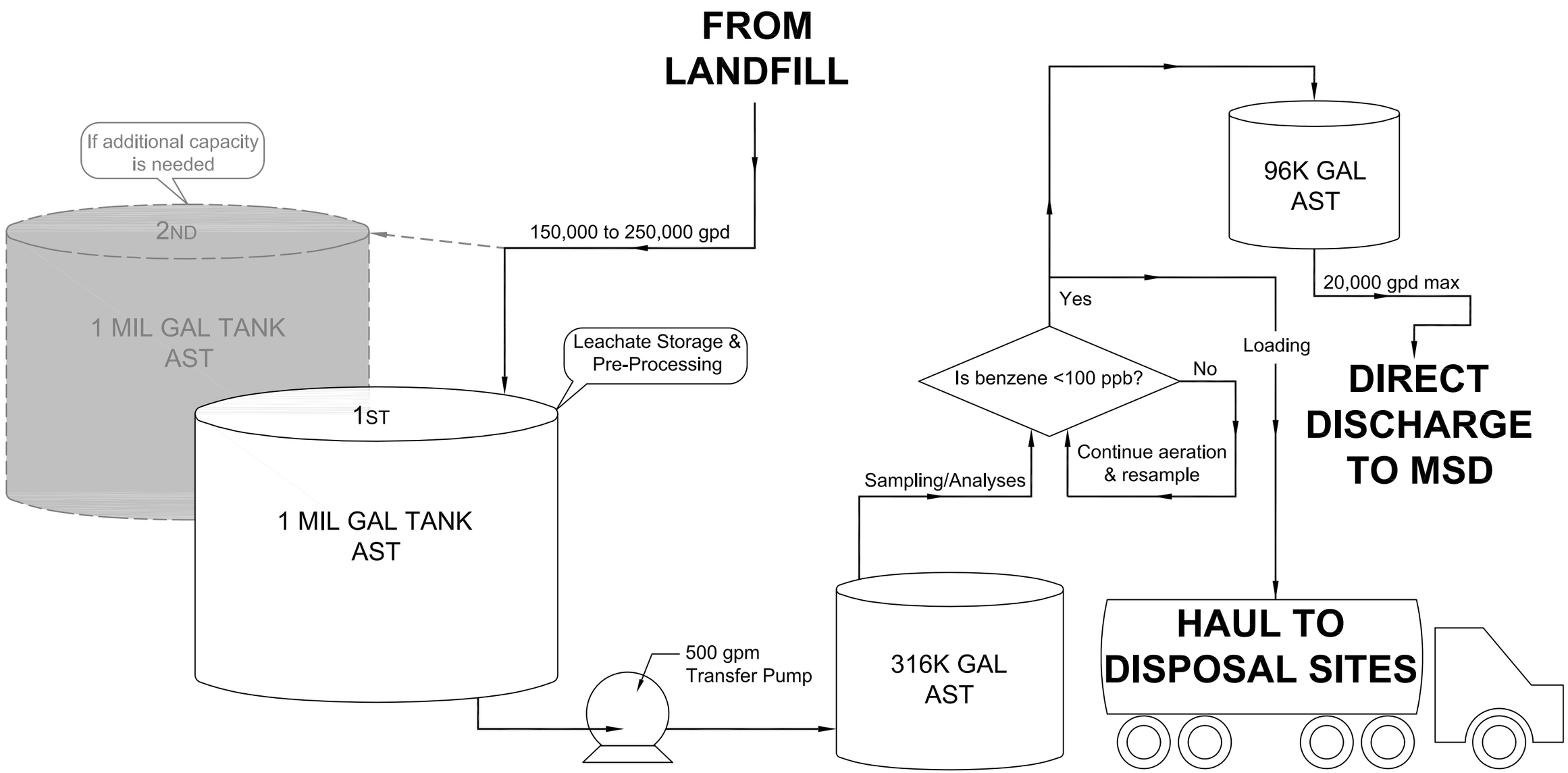

BRIDGETON LANDFILL, LLC 13570 ST. CHARLES ROCK ROAD BRIDGETON, MO 63044	BRIDGETON LANDFILL LIQUIDS MANAGEMENT	Engineering for a Better World FEEZOR ENGINEERING, INC.	NOVEMBER 2013 DESIGNED BY: PML APPROVED BY:	DRAWING NO.:
REVISED INTERIM LEACHATE MANAGEMENT PLAN PROCESSING SCHEMATIC			REV. 1 12-19-13	001
PROJECT NUMBER: BT-011 FILE PATH: C:\Users\Paul\Desktop\BrMgmt\BT-011\Revised Leachate Interim Management Diagram.dwg			REVISION DATE	

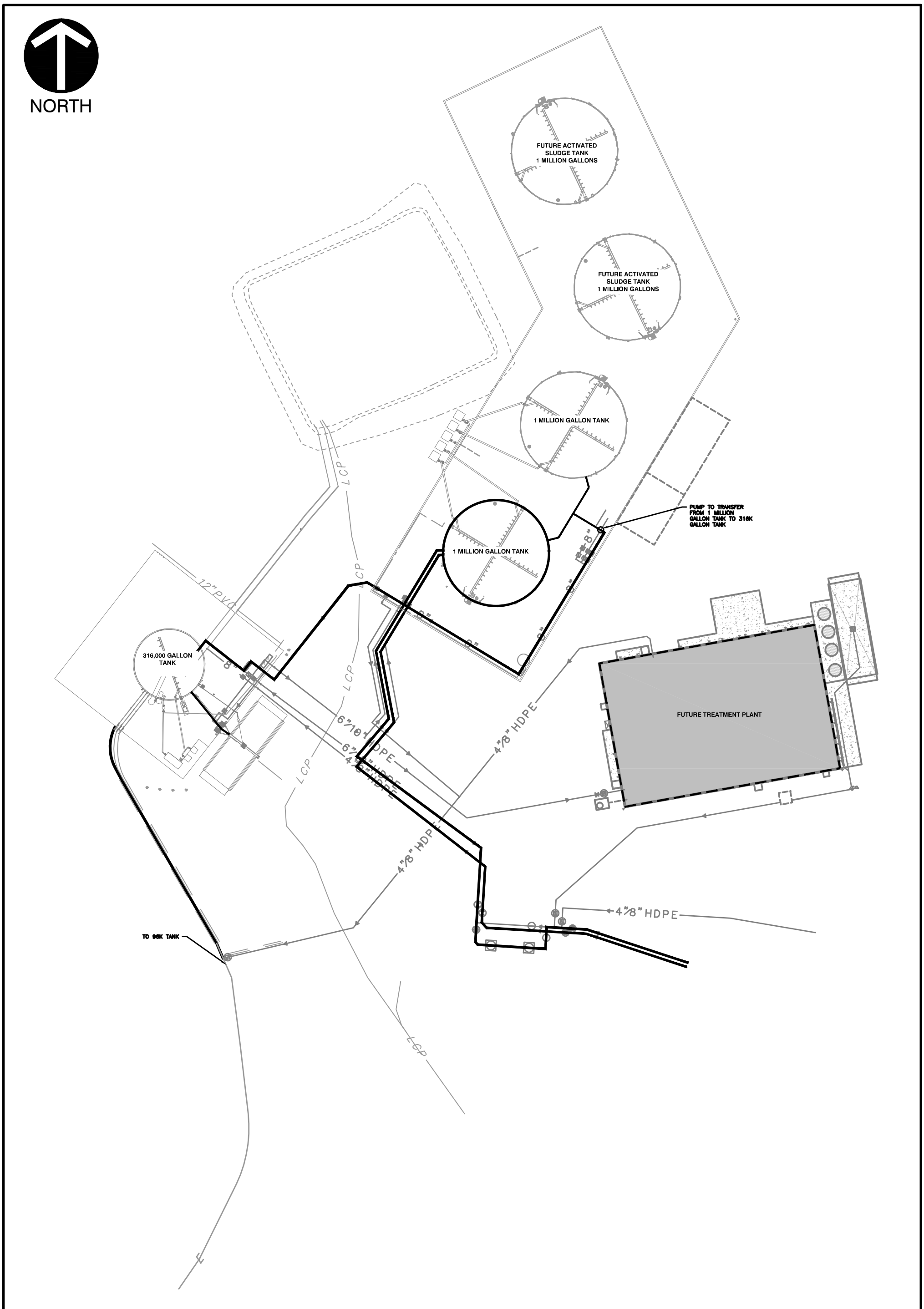

Civil & Environmental Consultants, Inc.
4848 Park 370 Blvd., Suite F - Hazelwood, MO 63042
314-656-4566 · 866-250-3679
www.cecinc.com

BRIDGETON LANDFILL LLC
BRIDGETON, MISSOURI

INTERIM LEACHATE MANAGEMENT PLAN
SITE AND PIPING LAYOUT

DRAWN BY:	CAC	CHECKED BY:	KTK	APPROVED BY:	KTK	FIGURE NO.:	2
DATE:	DECEMBER 2013	DWG SCALE:	1"=60'	PROJECT NO:	130-484		

P:\2013\130-484\-CADD\Dwg\Phaseiii\130484-FIGURE 2 ILMP For DNR.dwg{11X17H} LS:(12/18/2013 - sbriggs) - LP: 12/18/2013 9:04 AM

Attachment 2

ILMP – Appendix E Addendum

SULZER

CPT Chemical Process Pumps
Dimensional drawing: P21128

COPYRIGHT SULZER PROCESS PUMPS(U.S.) INC.

Version 03 > / en / 120110 / REPLACES 111018 / **P2112B**

CPT21-4 (6 x 4 x 8A)
Steel baseplate for pump and motor, style 1 and 2 with drip pan

Dimensions in inches

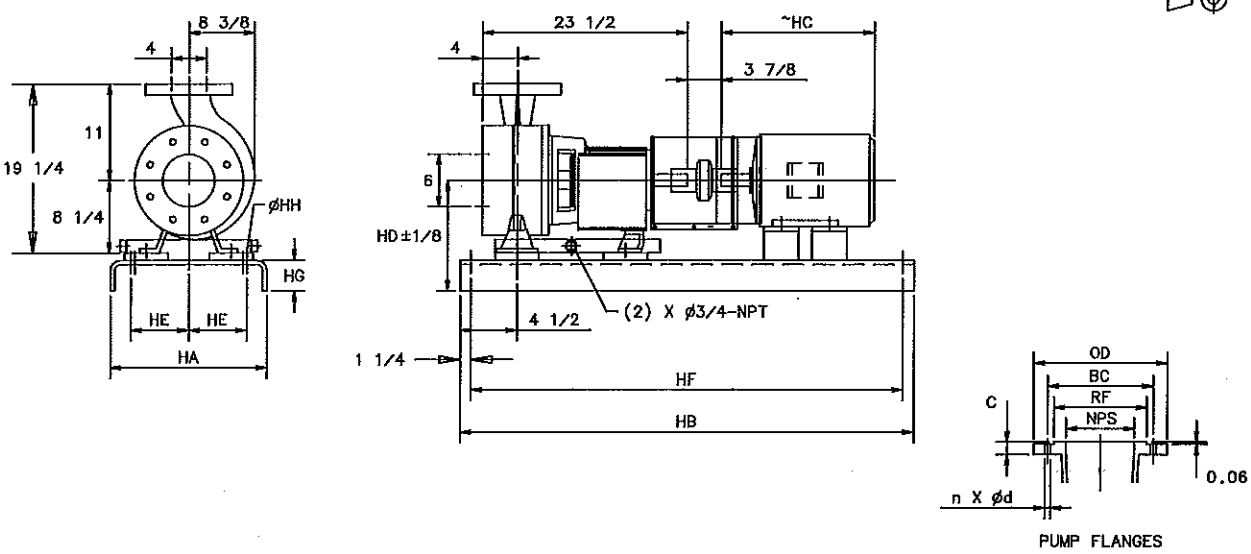

DIMENSIONS										
Primary motor frame	HC	HA	HB	HE	HF	HG	HH	HD	Weight(lbs.)*	
									style 1	style 2
184T	15 1/8	15	45	4 1/2	42 1/2	3 3/16	3/4	11 7/16	526	531
213T	17 1/2	18	52	6	49 1/2	3 1/2	3/4	11 3/4	610	615
215T	19	18	52	6	49 1/2	3 1/2	3/4	11 3/4	610	615
326TS	29 1/4	21	64	7 1/2	61 1/2	4	1	12 1/4	720	725
365TS	31 7/8	21	64	7 1/2	61 1/2	4	1	13 1/4	748	753
405TS	34 7/8	26	68	9 1/2	65 1/2	4	1	14 1/4	846	851

DRILLING OF FLANGES												
NPS	ASME B16.5 Class 150(SS) ASME B16.42 Class 150(DI)						ASME B16.5 Class 300(SS)					
	OD	RF	C	BC	d	n	OD	RF	C	BC	d	n
4	9.00	6.19	0.94	7.50	0.75	8	10.00	6.19	1.25	7.88	0.88	8
6	11.00	8.50	-	9.50	3/4-10 UNC	8	12.50	8.50	-	10.62	3/4-10 UNC	12

* Weight without coupling and motor.

PUMPS: P-307A3, P-307A4, P-307B3, P-307C3, P-307C4, P-307D3

Dimensions in inches - NOTE:

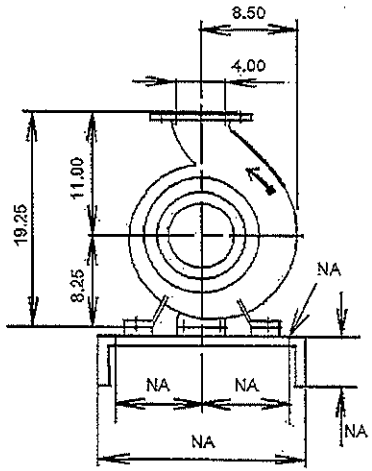

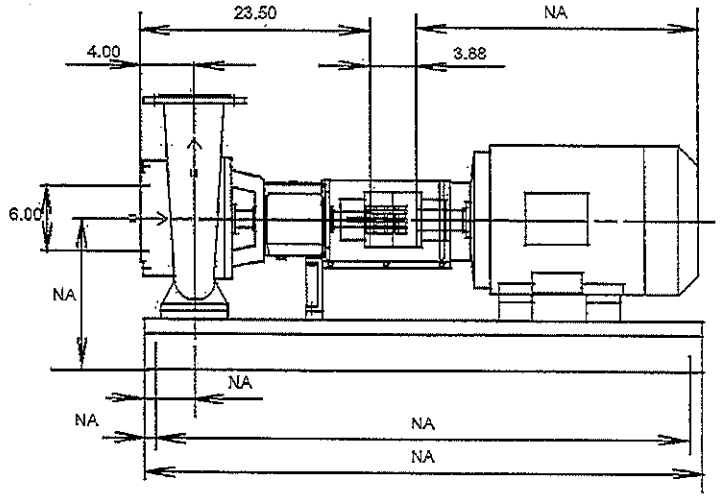

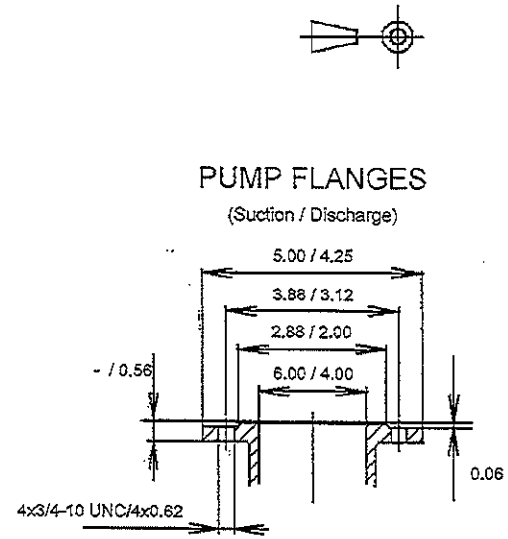

MOTOR INFORMATION

Driver Power	25 HP
Service factor	1
RPM	1,705 rpm
Voltage	208-230/460
Frequency	60 Hz
Enclosure	284T / TEFC

PUMP INFORMATION

Product Line	CPT
Pump Size	CPT 21-4 (6x4x8.5) (O)
No. of Stages	1

WEIGHTS

Pump	360.0 lb
Baseplate	250.0 lb
Driver	Not included
TOTAL	1,091.0 lb

FLANGES

	Size	Rating
Suction Flange	6	150#
Discharge Flange	4	150#

TENDER SUMMARY

Sulzer Reference ID	USA.8588-GSP.13.0073-B5
Project name	Bridgeton LF, W13-064-MDB
Customer	CEC
Inquiry Number/ID	
Item number	Permeate and reuse discharge pumps
Date Last Saved	17 Sep 2013 5:45 PM
Service	UNKNOWN

SULZER

General Arrangement Drawing

SULZER

Sulzer Process Pumps US

PRODUCT SPECIFICATION

Description	CPT21-4
Serial Number	100112596
Reference no.	210939/000030
Time of delivery/EXW	07/29/2013
Date printed	07/19/2013 Page 1

Customer
DYNATEC, INC.
2644-B ROUTE 206 NORTH
MOUNT HOLLY NJ 08060
USA
Cust. Order 734522
Cust. PO line
Country code US

DYNATEC SYSTEMS, INC.
ATTN: ALEX SHERMAN
909 JACKSONVILLE ROAD
BURLINGTON NJ 08016
USA

Equipment
Id

GENERAL

Pump type: **CPT**
Version: **03**
Classification: **B, Pre-engineered**
Units: **US**
Painting method: **Standard, Corrosivity C3 [NE]**
Color shade: **NCS 1700**
Tests: **PERFORMANCE HI 1.6 LEVEL A**
Coupling and Guard: **Included in the delivery**
Base plate: **Included in the delivery**
Drive motor: **Included in the delivery**

PROCESS DATA

Process: **Various Desalination**
Specific gravity: **1.00**
Temperature: **80 °F**
Capacity Q: **500.0 gpm**
Head H: **45.0 Feet**

PUMP PERFORMANCE

Characteristic curve: **K17385, O 1775 rpm 21-4**
Rated power P: **7.5 HP**
Motor power: **10.0 HP**
Dynamic seal power: **1.2 HP**
Efficiency: **65.0 %**
Pump rotational speed: **1775 rpm**
Variable speed: **No**
NPSH required: **10.5 Feet**
Capacity Q water: **500.0 gpm**
Head H water: **45.0 Feet**
Rated power P water: **7.5 HP**
Dynamic seal power water: **1.2 HP**
Efficiency water: **65.0 %**

PUMP

Pump Size: **21-4**
Flange drilling: **ASME B16.5-2009 CLASS 150**
Impeller no.: **610460, O 21-4**
Impeller Type: **Open**
Impeller diameter: **8.000 "**
Impeller max. diameter: **8.50 "**
Impeller balance holes: **Yes**
Casing material: **A890 3A**
Casing screw type: **Hexagonal screw**
Screw material: **A4-80 ISO 3506**
Gasket Material: **PTFE/Glass**
Casing gasket thickness: **0,8 mm**
O-ring Material: **FKM**
Shaft seal fitting: **DS01 Dynamic seal SS**
Dynamic seal material: **A890 3A**
Draining of pump conn. 040: **Yes**
Discharge pipe conn. 027: **Yes**
Press. measuring conn.036: **No**
Temper. measuring conn. 048: **No**
Bearing Unit Lubrication: **Oil lubrication**
Bearing unit type: **Foot frame Shaft Sleeved**
Bearing unit model: **06, 52 / 33 / NSs / Met**
Sign: **2006/42/EC**

Sulzer Process Pumps (US) Inc.
Easley Pump Factory
155 Ahlstrom Way
EASLEY SC 29640

Contact Person Sharon Whalley
LBU Order 0000210939
LBU Position 000030
Reference no. 210939/000030
Telephone
Telefax

SULZER

Sulzer Process Pumps US PRODUCT SPECIFICATION	Description CPT21-4 Serial Number 100112596 Reference no. 210939/000030 Time of delivery/EXW 07/29/2013 Date printed 07/19/2013 Page 2
Customer DYNATEC, INC. 2644-B ROUTE 206 NORTH MOUNT HOLLY NJ 08060 USA Cust. Order 734522 Cust. PO line Country code US	DYNATEC SYSTEMS, INC. ATTN: ALEX SHERMAN 909 JACKSONVILLE ROAD BURLINGTON NJ 08016 USA Equipment Id

ASSEMBLY

Dim.drawing, Assembly of Pump: **P21128**
Next larger motor frame option: **Not included in the deliver**
Base plate type: **Style 1 PuMo Steel Paint**
Baseplate color shade: **NCS 1700**
Motor NEMA code: **215T**

Coupling type: **Rex Viva VS**
Coupling guard material: S+Z EN10025
Special parts of assembly: **DRIP PAN W/DRAIN OFF THE SIDE**
Riser block material: **Steel**

MOTOR

Motor Supplier: **Easley**
Motor manufacturer: **SIEMENS**
Motor NEMA code: **215T**
Motor type: **SD**
Rotational speed: **1,800 rpm**

Power: **10.00 HP**
Frequency: **60 Hz**
Voltage: **208-230/460**
Enclosure: **TEFC**
Specialities of Motor: **PB-SD10/1800SIE.208-230/460**

CUSTOMER INSTRUCTIONS

End user language: **English**
CD-disk. for order lang/qty: **EN03**

Certificates: **PERFORMANCE HI 1.6 LEVEL A**

Sulzer Process Pumps (US) Inc. Easley Pump Factory 155 Ahlstrom Way EASLEY SC 29640	Contact Person Sharon Whalley LBU Order 0000210939 LBU Position 000030 Reference no. 210939/000030 Telephone Telefax

SULZER

Sulzer Process Pumps US PART LIST	Description	CPT21-4
	Serial Number	100112596
	Reference no.	210939/000030
	Time of delivery/EXW	07/29/2013
	Date printed	07/19/2013 Page 3

Customer Instructions

000.01	1	SPECIFICATION AND PART LIST	000 SERIAL NUMBER
001.01	1	DIMENSIONAL DRAWING	P21128EN
001.02	1	Dimensional drawing	P11990EN
002.01	1	Characteristic curve	K17385EN
010.01	1	ASSEMBLY SECTDWG	N14219EN_20100215
011.01	1	PUMP SECTDWG	N15078EN_20080601
012.01	1	SHAFT SEAL SECTDWG	N15099EN_20010515
013.01	1	BEARING UNIT SECTDWG	N13970EN_20020501
058.01	1	DECLARATION OF QUALITY	N15110EN_20100430
059.01	1	PAINTING CERTIFICATE	N15111EN_20100430
062.01	1	INTENDED USE	N15252EN_20100430
063.01	1	Safety of Machinery	N31142EN
063.02	1	SAFETY INSTRUCTIONS	N15062EN_20101025
064.01	1	HOISTINGS AND TRANSPORTATIONS	N15063EN_20010515
065.01	1	COMMISSIONING	N15064EN_20010515
067.01	1	INSTALLATION	N15253EN_20020501
068.01	1	OPERATION	N15066EN_20010515
069.01	1	PREVENTIVE MAINTENANCE	N15254EN_20040401
070.01	1	CORRECTIVE MAINTENANCE	N15255EN_20110929
071.01	1	SPARE PARTS RECOMMENDATION	N15069EN_20080601
072.01	1	PERFORMANCE CERTIFICATE	N04386EN_100112596
D001.01	1	INSTRUCTION, DRIVE MOTOR, SIEMENS, NEMA	C10742EN
D001.02	1	INSTRUCTION, DRIVE MOTOR	CJ751301004EN
D002.01	1	INSTRUCTION, COUPLING, REX VIVA	C10014EN

Connections

027.01	CON027	1	DISCHARGE PIPE CONN. 1/4-18NPT
040.01	CON040	1	DRAINING OF PUMP 1/2-14NPT
042.01	CON042	1	OIL FILLING 1/2-14NPT
043.01	CON043	1	DRAINING OF LUBRICAT 1/2-14NPT
044.01	CON044	2	CONSTANT LEVEL OILER 1/4-18NPT

Parts

102.01	530234CA41	1	VOLUTE CASE CPT21-4 O	(41) A890 3A
			Flange drilling: **ASME B16.5-2009 CLASS 150**	
			Draining of pump conn. 040: **Yes**	
			Discharge pipe conn. 027: **Yes**	
			Press. measuring conn.036: **No**	

Sulzer Process Pumps (US) Inc.
Easley Pump Factory
155 Ahlstrom Way
EASLEY SC 29640

Contact Person Sharon Whalley
LBU Order 0000210939
LBU Position 000030
Reference no. 210939/000030
Telephone
Telefax

SULZER

Sulzer Process Pumps US PART LIST	Description	CPT21-4
	Serial Number	100112596
	Reference no.	210939/000030
	Time of delivery/EXW	07/29/2013
	Date printed	07/19/2013 Page 4

			Temper. measuring conn. 048: **No**	
161.02	613147CC41	1	CASE COVER CPT21	(41) A890 3A
183.01	610480SF52	1	SUPPORT FOOT CPT2	(52) A48 CL 30 B
210.01	712176SH33	1	SHAFT CPT2 SL	(33) SS2324
230.01	610460MP41	1	IMPELLER O 8.5" B1 7/16" Z6 CPT21-4	(41) A890 3A
			Impeller diameter: **8.000 "**	
			Impeller max. diameter: **8.50 "**	
320.01	G433000311	1	ANTIFRICTION BEARING NUP311 ECJ	
320.02	G325007309	2	ANTIFRICTION BEARING 7309 BECBM	
330.01	533175BH52	1	BEARING HOUSING CPT2 O	(52) A48 CL 30 B
339.01	6130942106	1	BEARING UNIT CPT2 O FSL	
344.01	610485AD5H	1	ADAPTER CPT21	(5H) A395 60-40-18
360.01	712198BC52	1	BEARING COVER CPT2	(52) A48 CL 30 B
382.01	712194BR5H	1	BEARING CARRIER O CPT2	(5H) A395 60-40-18
400.01	E808254W84	1	GASKET 254(-2/-3)/217(-1/-2)X0.8	(84) PTFE/Glass
412.01	E124041094	1	O-RING 41,0 X 1,78 BS1806 SIZE NO.030	(94) PTFE
			Nominal diameters 1 5/8 x 1 3/4 x 1/16	
412.02	E11B119591	2	O-RING 119,5X3 SMS1586	(91) NBR
412.03	E11B094591	1	O-RING 94,5X3 SMS1586	(91) NBR
412.04	E11H189393	1	O-RING 189,3X5,7 SMS1586	(93) FKM
412.05	E129047393	1	O-RING 47,34 X 2,62 BS1806 SIZE NO.134	(93) FKM
			Nominal diameters 1 7/8 x 2 1/16 x 3/32	
412.06	E11B099593	1	O-RING 99,5X3 SMS1586	(93) FKM
423.01	GK1A320000	1	LABYRINTH RING CPT2 VBX 2,125" INBOARD	Bronze
			p/n = 1221-A-16521-0	
423.02	GK1B320000	1	LABYRINTH RING CPT2 VBX 1,375" OUTBOARD	Bronze
			p/n = 1800-A-P0008-0	
435.01	3822790384	1	STATIC SEAL AP3	(84) PTFE/Glass
451.01	613155SB41	1	STUFFING BOX HOUSING CPT21	(41) A890 3A
			Temper. measuring conn. 048: **No**	
471.02	7070210142	1	COVER PLATE FOR SEAL AP3	(42) A743 CF-8M
475.01	712262TR33	1	THRUST RING CPT2	(33) SS2324
554.02	B310010537	6	WASHER ISO 7089-10-200 HV-A4	(37) A4 ISO3506
554.03	B360008437	4	WASHER 8,4 DIN7349	(37) A4 ISO3506
554.04	B360013037	2	WASHER 13 DIN7349	(37) A4 ISO3506
554.05	B360013037	2	WASHER 13 DIN7349	(37) A4 ISO3506
556.01	7092640510	4	RISER BLOCK 4"X4"X2.75"	(10) S EN10025
			709264-05	
604.01	613163EX41	1	EXPELLER CPT21	(41) A890 3A
642.01	GH3330506D	2	SIGHT GLASS SM-12 ISO 228/1-G 1/2	(6D) Al (aluminium)
644.01	914706LR12	1	OIL RING CPT2 D122/57	(12) Fe P01 EN10130
672.01	GH55305000	1	VENTING DEVICE EV 1028-14-00 R 1/2	
685.01	6105780111	1	GUARD END 250MM O.D. FOR BEARING UNIT #2	(11) S235JRG2 EN10025

Sulzer Process Pumps (US) Inc.
Easley Pump Factory
155 Ahlstrom Way
EASLEY SC 29640

Contact Person Sharon Whalley
LBU Order 0000210939
LBU Position 000030
Reference no. 210939/000030
Telephone
Telefax

SULZER

Sulzer Process Pumps US

PART LIST

Description	CPT21-4
Serial Number	100112596
Reference no.	210939/000030
Time of delivery/EXW	07/29/2013
Date printed	07/19/2013 Page 5

686.01	933203011K	1	GUARD JACKET D250,L200	(1K) S+Z EN10025
686.02	384476011K	1	GUARD JACKET D250 L165	(1K) S+Z EN10025
749.01	980814013U	1	DRIP PAN SPECIAL CPT2 FOR DYNATEC	304/304L S.S.
800.01	J751301004/PB	1	MOTOR 10HP/1800RPM/215T/230/460V PB	
840.01	KAC1035349	1	COUPLING VS110-R-FBH D1=1.375 D2=1.375	
890.01	610558XX10	1	BASEPLATE #252 MULTI DRILLED	(10) S EN10025
901.01	A132063239	12	HEXAGON HEAD SCREW 1/2-13UNCX1 1/4 ANSI B18.2.1	(39) A4-80 ISO3506
901.02	A132052539	2	HEXAGON HEAD SCREW 3/8-16UNC X 1 ANSI B18.2.1	(39) A4-80 ISO3506
901.03	A142063839	6	HEXAGON HEAD SCREW 1/2-13UNC X 1 1/2" ANSI B18.2.1	(39) A4-80 ISO3506
			1/2-13UNC x 1 1/2" ANSI B18.2.1 FT	
901.04	A132062539	2	HEXAGON HEAD SCREW 1/2-13 UNC X 1" ANSI B18.2.1	(39) A4-80 ISO3506
901.05	A142053239	3	HEXAGON HEAD SCREW 3/8-16UNC X 1 1/4 ANSI B18.2.1 F	(39) A4-80 ISO3506
			3/8-16UNC x 1 1/4 ANSI B18.2.1 FT	
901.06	A132041939	4	HEXAGON HEAD SCREW 5/16-18UNC X 3/4 ANSI B18.2.1	(39) A4-80 ISO3506
901.08	A132063839	3	HEXAGON HEAD SCREW 1/2-13UNCX1 1/2 ANSI B18.2.1	(39) A4-80 ISO3506
901.09	A132051939	3	HEXAGON HEAD SCREW 3/8-16UNCX3/4 ANSI B18.2.1	(39) A4-80 ISO3506
901.11	A132064539	2	HEXAGON HEAD SCREW 1/2-13UNCX1 3/4 ANSI B18.2.1	(39) A4-80 ISO3506
901.12	A132064539	2	HEXAGON HEAD SCREW 1/2-13UNCX1 3/4 ANSI B18.2.1	(39) A4-80 ISO3506
902.03	AC2204C733	4	STUD 5/16-18UNC X 5" SAP 200	(33) SS2324
903.01	CC25050034	1	THREADED PLUG 1/2-14 NPT SCC102	(34) SS2343
903.02	CC25030034	1	THREADED PLUG 1/4-18 NPT SCC102	(34) SS2343
903.07	CC25050034	1	THREADED PLUG 1/2-14 NPT SCC102	(34) SS2343
903.08	CC25030016	2	THREADED PLUG 1/4-18 NPT SCC102	(16) S+ZE EN10025
903.09	CC25030034	1	THREADED PLUG 1/4-18 NPT SCC102	(34) SS2343
904.01	A662051638	3	SET SCREW 3/8-16UNCX5/8 ANSI	(38) A4-50 ISO3506
914.01	A611103539	3	CAP SCREW, SOCKET HD M10X35 ISO4762	(39) A4-80 ISO3506
920.03	B222704030	3	NUT M10 - PTROM-1040	(30) SS
920.04	B122040039	4	NUT 5/16-18.UNC ANSI B18.2.2	(39) A4-80 ISO3506
923.01	GA11000910	1	BEARING NUT KM9	(10) S EN10025
931.01	GC10000910	1	LOCK WASHER MB9	(10) S EN10025
932.01	B710001030	3	RETAINING RING Ø10 - DIN471	(30) SS
940.01	B820804115	1	KEY 5/16X5/16X15/8 ANSI B 17.1-1967	(15) CK45K DIN1652
970.01	WK3130307A	2	SIGN SULZER LOGO SIGN L130 MM	(6D) Al (aluminium)
971.01	93265101BG	1	NAME PLATE CENTRIF PUMP EASLEY	(S0708) EN 1.4301
975.02	SS00050102	2	WARNING SIGN	
			Rotating shaft	
975.03	SS00050202	2	WARNING SIGN	
			Corrosive / Irritating liquid	
975.04	SS00050802	1	WARNING SIGN	
			Guard adjustment, in english	
976.01	SS0006M002	1	MANDATORY ACTION SIG EN	
			Oil refilling	
976.02	SS0006M022	1	MANDATORY ACTION SIG	

Sulzer Process Pumps (US) Inc.
Easley Pump Factory
155 Ahlstrom Way
EASLEY SC 29640

Contact Person Sharon Whalley
LBU Order 0000210939
LBU Position 000030
Reference no. 210939/000030
Telephone
Telefax

Sulzer Process Pumps US PART LIST	Description	CPT21-4
	Serial Number	100112596
	Reference no.	210939/000030
	Time of delivery/EXW	07/29/2013
	Date printed	07/19/2013 Page 6

Coupling alignment

Sulzer Process Pumps (US) Inc.
Easley Pump Factory
155 Ahlstrom Way
EASLEY SC 29640

Contact Person Sharon Whalley
LBU Order 0000210939
LBU Position 000030
Reference no. 210939/000030
Telephone
Telefax

SULZER

EC Declaration of Conformity

as defined by EC machinery directive 2006/42/EC, Annex IIA

Manufacturer:	Sulzer Process Pumps (US) Inc. 155 Ahlstrom Way, 29640 Easley, USA
Contact person:	Director Product Development Jukka-Pekka Peri Sulzer Pumps Finland Oy PL 66, 48601 Kotka, Finland

herewith declares that

Centrifugal pump, type:	CPT21-4
Serial number:	100112596

is in conformance with directive 2006/42/EC (machinery directive) and where applicable following other EC directives 2004/108/EC (electromagnetic compatibility) and 2006/95/EC (low voltage). Harmonized standard EN 809 has been applied to the design and manufacture of the product.

Easley 19.07.2013

Ilkka Sinisalo
Head Operations BA CS

This declaration only concerns the machine as it was brought to the market. This declaration does not cover parts added to the machine by the end user afterwards and/or operations carried out on the machine by the end user.

COPYRIGHT © SULZER PUMPS FINLAND OY

SULZER

CPT Chemical Process Pumps
Dimensional drawing: P21128

COPYRIGHT SULZER PROCESS PUMPS(U.S.) INC.

Version 03 > / en / 120110 / REPLACES 111018 / **P21128**

CPT21-4 (6 x 4 x 8A)
Steel baseplate for pump and motor, style 1 and 2 with drip pan

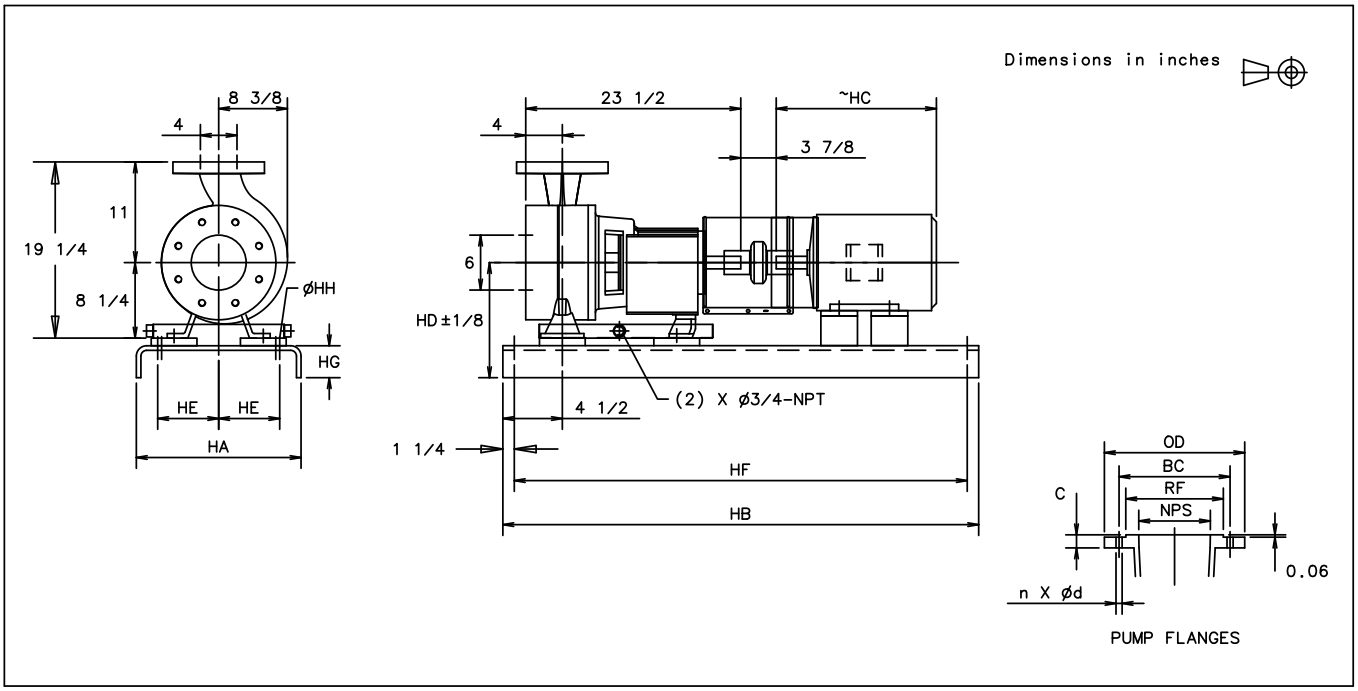

DIMENSIONS										
Primary motor frame	HC	HA	HB	HE	HF	HG	HH	HD	Weight(lbs.)*	
									style 1	style 2
184T	15 1/8	15	45	4 1/2	42 1/2	3 3/16	3/4	11 7/16	526	531
213T	17 1/2	18	52	6	49 1/2	3 1/2	3/4	11 3/4	610	615
215T	19	18	52	6	49 1/2	3 1/2	3/4	11 3/4	610	615
326TS	29 1/4	21	64	7 1/2	61 1/2	4	1	12 1/4	720	725
365TS	31 7/8	21	64	7 1/2	61 1/2	4	1	13 1/4	748	753
405TS	34 7/8	26	68	9 1/2	65 1/2	4	1	14 1/4	846	851

DRILLING OF FLANGES												
NPS	ASME B16.5 Class 150(SS) ASME B16.42 Class 150(DI)						ASME B16.5 Class 300(SS)					
	OD	RF	C	BC	d	n	OD	RF	C	BC	d	n
4	9.00	6.19	0.94	7.50	0.75	8	10.00	6.19	1.25	7.88	0.88	8
6	11.00	8.50	-	9.50	3/4-10 UNC	8	12.50	8.50	-	10.62	3/4-10 UNC	12

* Weight without coupling and motor.

CPT Chemical Process Pumps
Dimensional drawing P11990

COPYRIGHT © SULZER PUMPS FINLAND OY

Version 03 > / 20080601 / Replaces 20020501 / P11990

CPT21-1B ... CPT24-4

Bare Pump

Dimensions in inches

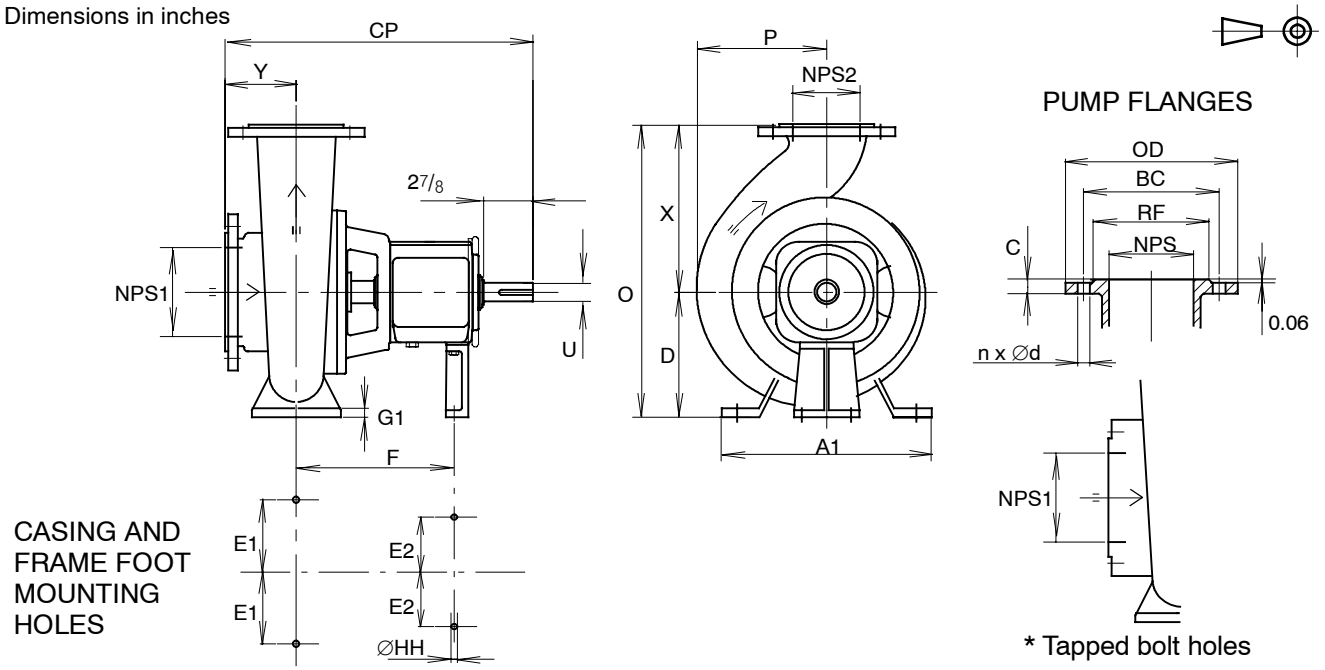

DIMENSIONS																	
Type	NPS1	NPS2	CP	D	E1	E2	F	HH	O	P	U		X	Y	A1	G1	Weight lbs
											Dia.	Keyway					
21-1B	3	1 1/2	23 1/2	8 1/4	4 7/8	3 5/8	12 1/2	5/8	16 3/4	5 19/32	1 3/8	5/16x5/32x1 5/8	8 1/2	4	11 1/4	1/2	260
21-2	3	2	23 1/2	8 1/4	4 7/8	3 5/8	12 1/2	5/8	17 3/4	6	1 3/8	5/16x5/32x1 5/8	9 1/2	4	11 1/4	1/2	270
21-3	4	3	23 1/2	8 1/4	4 7/8	3 5/8	12 1/2	5/8	19 1/4	6 7/32	1 3/8	5/16x5/32x1 5/8	11	4	11 1/4	1/2	290
21-4	6 *	4	23 1/2	8 1/4	4 7/8	3 5/8	12 1/2	5/8	19 1/4	8 1/2	1 3/8	5/16x5/32x1 5/8	11	4	11 1/4	1/2	360
22-1	2	1	23 1/2	8 1/4	4 7/8	3 5/8	12 1/2	5/8	16 3/4	6 5/8	1 3/8	5/16x5/32x1 5/8	8 1/2	4	11 1/4	1/2	260
22-1C	2	1	23 1/2	8 1/4	4 7/8	3 5/8	12 1/2	5/8	16 3/4	6 5/8	1 3/8	5/16x5/32x1 5/8	8 1/2	4	11 1/4	1/2	265
22-1B	3	1 1/2	23 1/2	8 1/4	4 7/8	3 5/8	12 1/2	5/8	16 3/4	6 15/16	1 3/8	5/16x5/32x1 5/8	8 1/2	4	11 1/4	1/2	295
22-2	3	2	23 1/2	8 1/4	4 7/8	3 5/8	12 1/2	5/8	17 3/4	7 15/16	1 3/8	5/16x5/32x1 5/8	9 1/2	4	11 1/4	1/2	300
22-4	6 *	4	23 1/2	10	4 7/8	3 5/8	12 1/2	5/8	23 1/2	9	1 3/8	5/16x5/32x1 5/8	13 1/2	4	11 1/4	1/2	375
23-1B	3	1 1/2	23 1/2	10	4 7/8	3 5/8	12 1/2	5/8	20 1/2	7	1 3/8	5/16x5/32x1 5/8	10 1/2	4	11 1/4	1/2	300
23-2	3	2	23 1/2	10	4 7/8	3 5/8	12 1/2	5/8	21 1/2	7 11/32	1 3/8	5/16x5/32x1 5/8	11 1/2	4	11 1/4	1/2	305
23-3	4	3	23 1/2	10	4 7/8	3 5/8	12 1/2	5/8	22 1/2	7 1/2	1 3/8	5/16x5/32x1 5/8	12 1/2	4	11 1/4	1/2	340
24-1B	3	1 1/2	23 1/2	10	4 7/8	3 5/8	12 1/2	5/8	20 1/2	8 1/2	1 3/8	5/16x5/32x1 5/8	10 1/2	4	11 1/4	1/2	320
24-1BC	3	1 1/2	23 1/2	10	4 7/8	3 5/8	12 1/2	5/8	20 1/2	8 1/2	1 3/8	5/16x5/32x1 5/8	10 1/2	4	11 1/4	1/2	325
24-2	3	2	23 1/2	10	4 7/8	3 5/8	12 1/2	5/8	21 1/2	8 15/16	1 3/8	5/16x5/32x1 5/8	11 1/2	4	11 1/4	1/2	350
24-3	4	3	23 1/2	10	4 7/8	3 5/8	12 1/2	5/8	22 1/2	10 1/8	1 3/8	5/16x5/32x1 5/8	12 1/2	4	11 1/4	1/2	400
24-4	6 *	4	23 1/2	10	4 7/8	3 5/8	12 1/2	5/8	23 1/2	10 1/4	1 3/8	5/16x5/32x1 5/8	13 1/2	4	11 1/4	1/2	475

DRILLING OF FLANGES												
NPS	ASME B 16.5 Class 150 (SS) ASME B 16.42 Class 150 (DI)						ASME B 16.5 Class 300 (SS)					
	OD	RF	C	BC	d	n	OD	RF	C	BC	d	n
1	4.25	2.00	0.56	3.12	0.62 1/2-13 UNC (1	4	4.88	2.00	0.69	3.50	0.75 5/8-11 UNC (1	4
1 1/2	5.00	2.88	0.69	3.88	0.62 1/2-13 UNC (2	4	6.12	2.88	0.81	4.50	0.88 3/4-10 UNC (2	4
2	6.00	3.62	0.75	4.75	0.75	4	6.50	3.62	0.88	5.00	0.75	8
3	7.50	5.00	0.94	6.00	0.75	4	8.25	5.00	1.12	6.62	0.88	8
4	9.00	6.19	0.94	7.50	0.75	8	10.00	6.19	1.25	7.88	0.88	8
6	11.00	8.50	-	9.50	3/4-10 UNC	8	12.50	8.50	-	10.62	3/4-10 UNC	12

1) CPT22-1 (low flow)
2) CPT24-1B (low flow)

COPYRIGHT © SULZER PUMPS FINLAND OY

CPT Chemical Process Pumps
Characteristic Curve K17385

COPYRIGHT © SULZER PUMPS FINLAND OY

CPT21–4 (6x4x8.5)
Impeller 610460 OPEN B0.59 Z6
1775 rpm

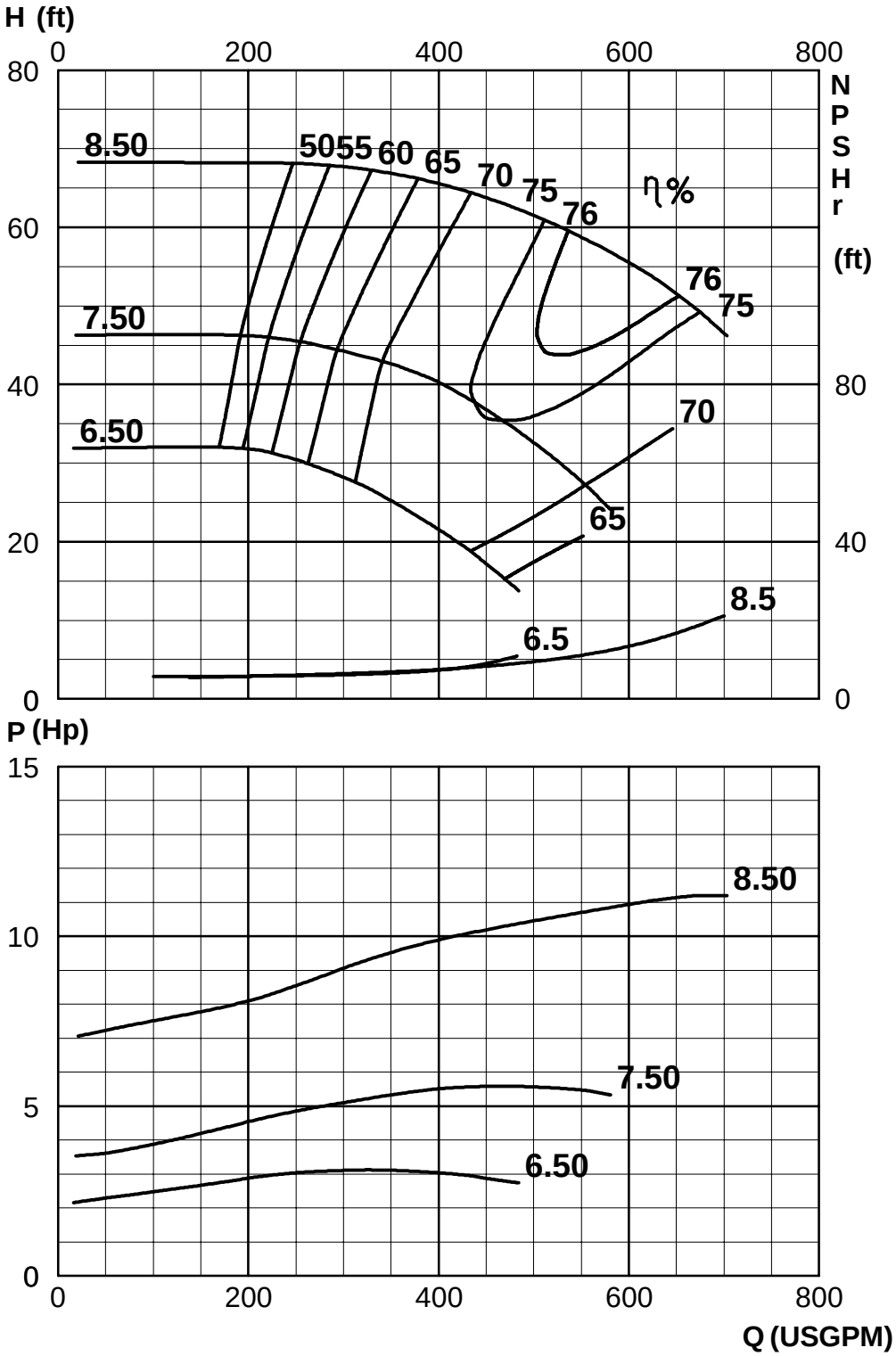

IMPELLER DIA	
in	**mm**
8.5	215.9
8.25	209.5
8	203.2
7.75	196.8
7.5	190.5
7.25	184.2
7	177.8
6.75	171.5
6.5	165.1

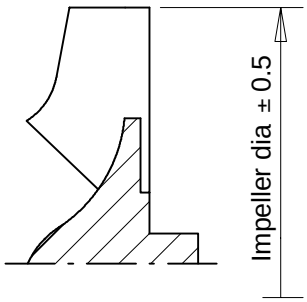

COPYRIGHT © SULZER PUMPS FINLAND OY

Version 02 > / 20100215 / Replaces 20080601 / en / **N14219**

010.01 Assembly

Baseplate for pump and motor

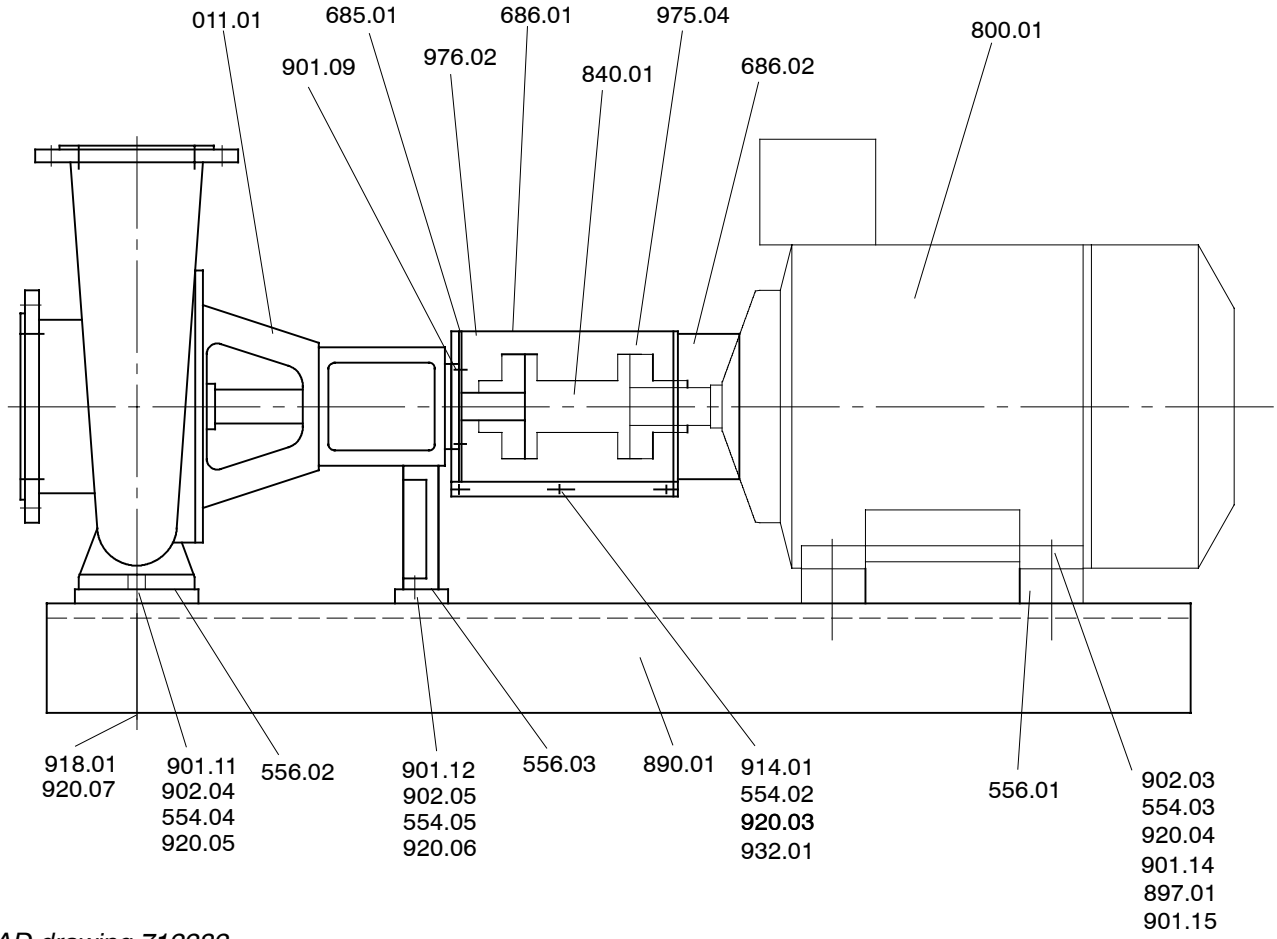

CAD drawing 712282

COPYRIGHT © SULZER PUMPS FINLAND OY

COPYRIGHT © SULZER PUMPS FINLAND OY

Version 02 > / 20080601 / Replaces 20020501 / en / **N15078**

011.01 Pump

Open and low flow impeller

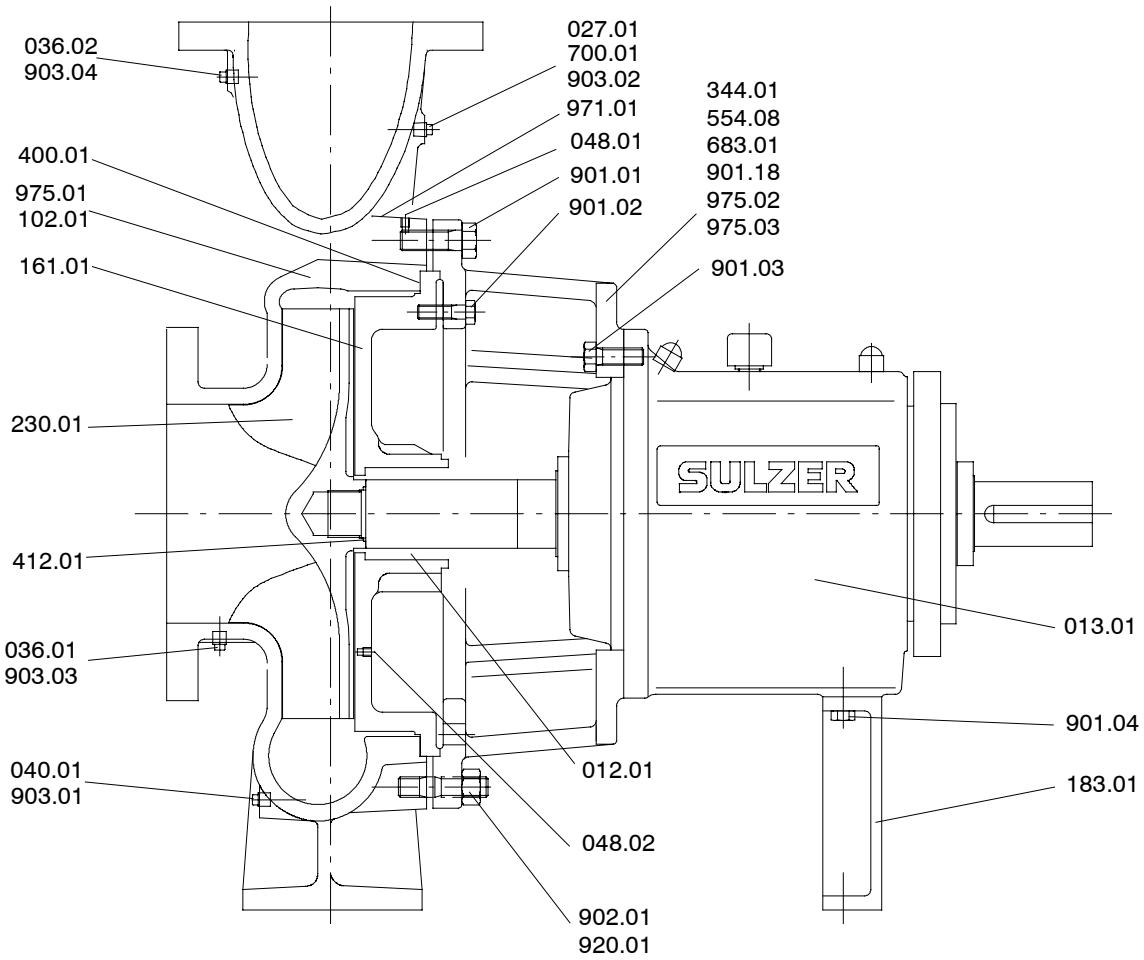

CAD drawing 613096

COPYRIGHT © SULZER PUMPS FINLAND OY

COPYRIGHT © SULZER PUMPS FINLAND OY

012.01 Shaft seal

Fitting DS01 (CPT11, 21, 22, 23, 24, 31)

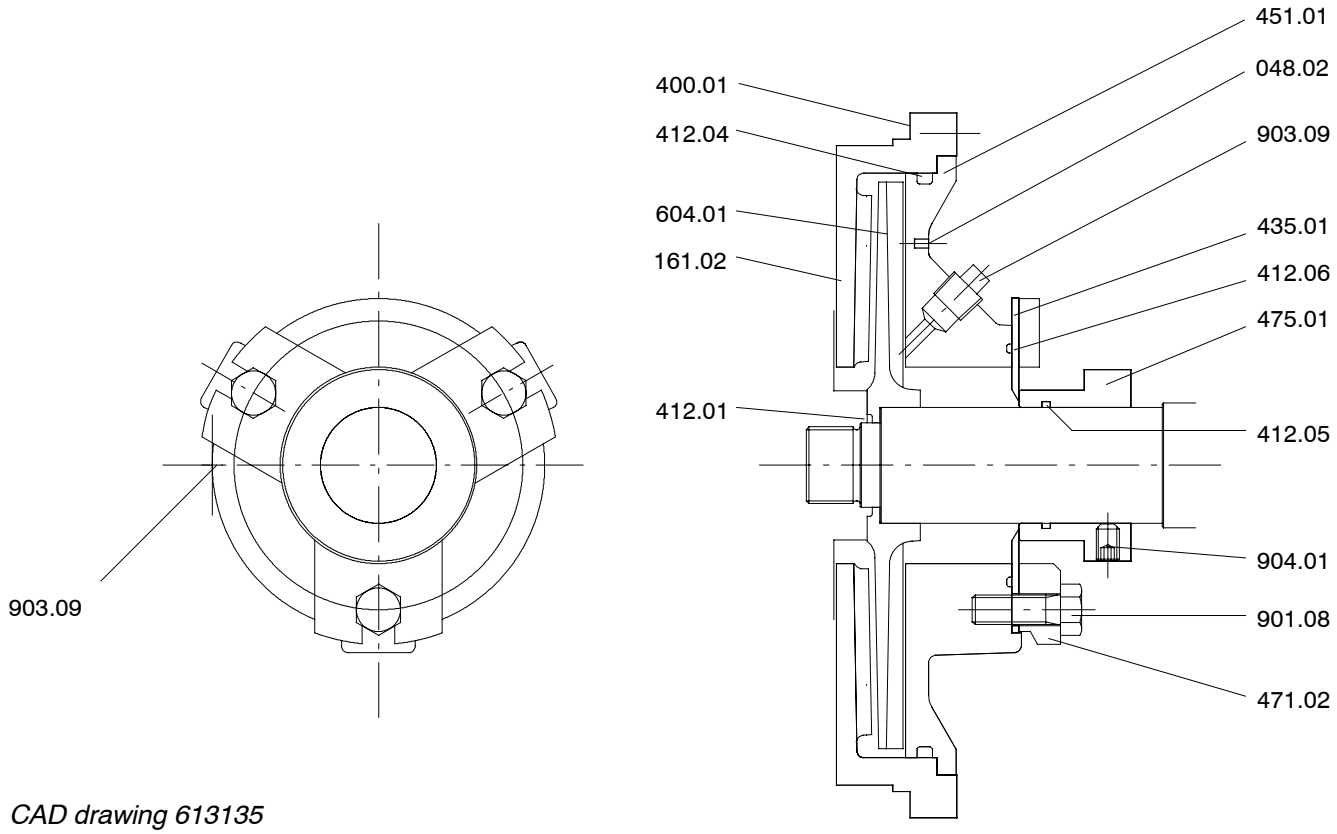

CAD drawing 613135

COPYRIGHT © SULZER PUMPS FINLAND OY

COPYRIGHT © SULZER PUMPS FINLAND OY

Version 02 > / 20020501 / Replaces 20010515 / **N13970**

013.01 Bearing unit

Oil lubrication (Part No. 339.01)

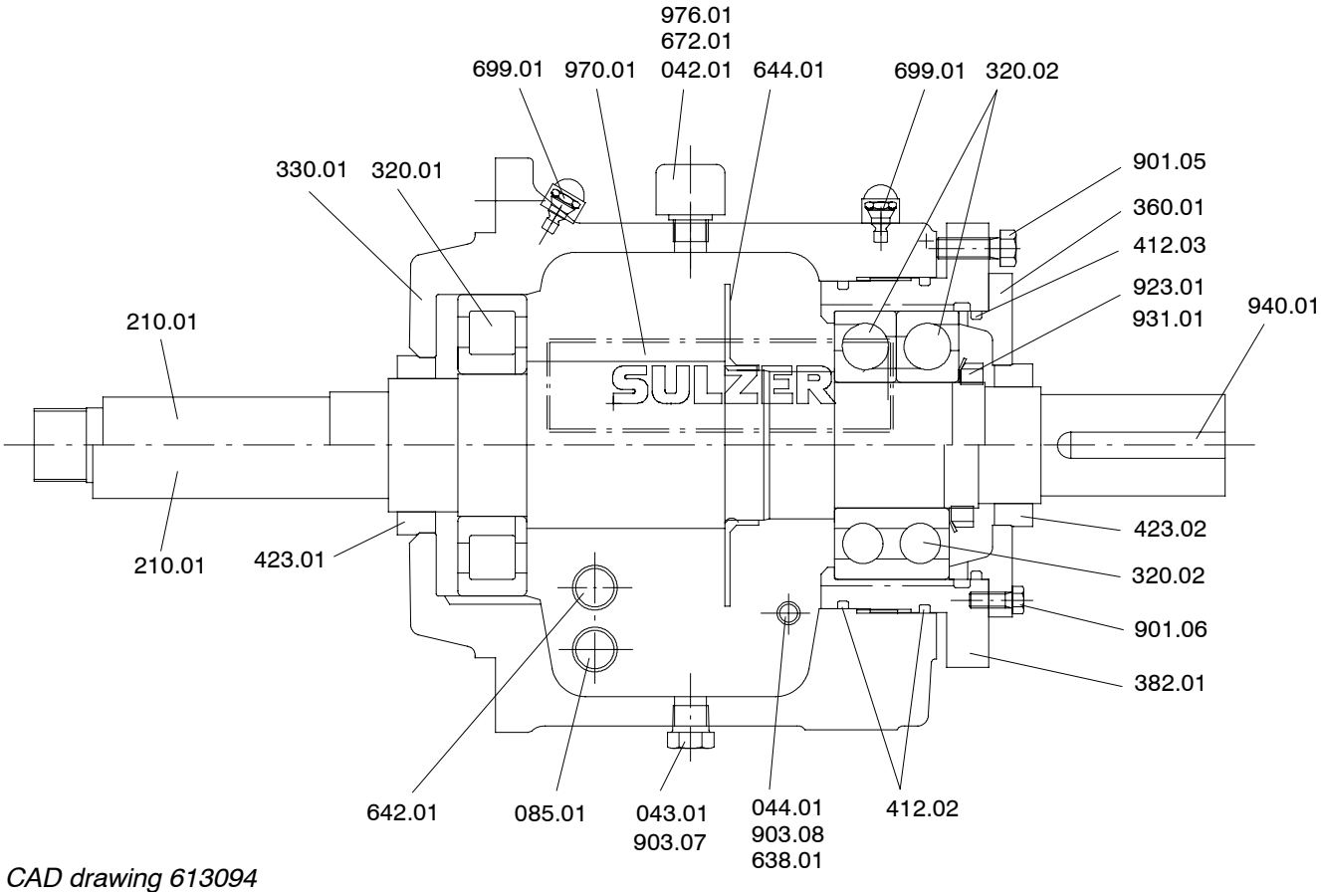

CAD drawing 613094

COPYRIGHT © SULZER PUMPS FINLAND OY

We certify that CPT pump has been manufactured, tested and inspected according to the ASME B73.1 -2001 technical specification and ISO 9001:2001 quality standard (if no other specified requirements exist).

1 Inspection before assembly

Components to be assembled have been examined.

Installation dimensions have been examined.

Information on the nameplate has been examined.

2 Materials

Materials have been manufactured according to the standard specified in order specification and part list.

3 Balancing of rotating components

All rotating components are balanced according to ISO 1940 G6.3 or G2.5 standard.

4 Hydrostatic test

All pressure containing parts (eg. casing, casing cover etc.) including their fasteners have been hydrostatically tested with clean water at ambient temperature (15 °C minimum for carbon steel). The hydrostatic test has been considered satisfactory when the test pressure is maintained for at least 10 min. without visible leakage. The hydrostatic pressure is 1.5 times the design pressure.

5 Performance test

Performance test has been done according to Hydraulic Institute Standards 1.6 level B.

During performance tests the pump vibration, bearing temperature and visually the shaft seal have been checked.

6 Final inspection

A final inspection has been done so, that the scope of supply is correct and complete according to the purchase order, including component identification, painting and preservation and technical documentation.

COPYRIGHT © SULZER PUMPS FINLAND OY

COPYRIGHT © SULZER PUMPS FINLAND OY

7 Preparation for dispatch

All internal parts made of material which are not resistant to corrosive attack by the environment have been drained and treated with a water displacing rust-preventative prior to shipment.

Exterior surfaces, except for machined surfaces, have been given at least one coat of the manufacturer's standard paint which shall be selected taking into account environmental considerations. The under-side of baseplates have been prepared for grouting.

Exterior machined surfaces of cast iron and carbon steel parts have been coated with a suitable rust preventative.

Bearings and bearing housings have been protected by preservative oil which is compatible with the lubricant. A warning label (oil lubricated bearing housings must be filled with oil to the proper level prior to starting) have securely attached to the pump.

Information on preservation agents and their removal have been securely attached to the pump.

All openings to the pressure chamber have weather-resistant closures substantial enough to withstand accidental damage.

Each unit have been prepared and small piping and auxiliaries secured, to prevent damage during shipment and storage.

The pump and all components supplied loose with it have been clearly and durably marked with the prescribed identification number.

Easley 30.4.2010

Alan Crawford

President

Sulzer Process Pumps (US) Inc.

COPYRIGHT © SULZER PUMPS FINLAND OY

We certify that CPT pump has been painted according to the option mentioned in the product specification.

1 Painting and galvanizing

Normal painting of pumps is made according to ISO 12944-5

- Cleanliness: According to standard of steel work preparation grade ISO8501-1 Sa 2 ½

1.1 Painting combinations

Liquid temperature is below 150 °C / 302 °F

NE

- Cast iron components ISO 12944-5/S3.18 EP200/3-FeSa 2 1/2
- Stainless steel components EP80/1-Ka/Pe

NZ

- Cast iron components ISO 12944-5/S3.22 EPZn[R] EP200/3-FeSa 21/2
- Stainless steel components EP80/1-Ka/Pe

Liquid temperature over 150 °C / 302 °F

HE

Adapter, bearing unit and support foot

- Cast iron components ISO 12944-5/S3.18 EP200/3-FeSa 2 1/2
- Stainless steel components EP80/1-Ka/Pe

Volute casing, casing cover, casing and stuffing box housing

- SI15/1-Ka/Pe

HZ

Adapter, bearing unit and support foot

- Cast iron components ISO 12944-5/S3.22 EPZn [R] EP200/3-FeSa 2 1/2
- Stainless steel components EP80/1-Ka/Pe

Volute casing, casing cover, casing and stuffing box housing

- SI15/1-Ka/Pe

Film combination specification

Pump surfaces generally

EP200/3	EP Zn[R] EP200/3	EP80/1	SI 15/1
1 x base 0.0024 in (60 μm) 1 x base 0.0024 in (60 μm) 1 x top coat 0.0031 in (80 μm) Nominal dry film thickness 0.0079 in (200 μm)	1 x base 0.0016 in (40 μm) 1 x base 0.0031 in (80 μm) 1 x top coat 0.0031 in (80 μm) Nominal dry film thickness 0.0079 in (200 μm)	1 x top coat 0.0031 in (80 μm) Nominal dry film thickness 0.0031 in (80 μm)	1 x 0.0006 in (15 μm) Nominal dry film thickness 0.0006 in (15 μm)

COPYRIGHT © SULZER PUMPS FINLAND OY

Machined pump surfaces			
1 x top coat 0.0031 in (80 µm) Dry film nominal thickness 0.0031 in (80 µm)	1 x top coat 0.0031 in (80 µm) Dry film nominal thickness 0.0031 in (80 µm)	1 x top coat 0.0031 in (80 µm) Dry film nominal thickness 0.0031 in (80 µm)	1 x top coat 0.0006 in (15 µm) Dry film nominal thickness 0.0006 in (15 µm) (E 60/1)

Guide surfaces and counter faces of pump parts
not painted Nominal dry film thickness -

Painted pump parts (other pump parts are not painted)

Part no.	Description	Part no.	Description
102.01	Volute casing	330.01	Bearing housing
161.01	Casing cover	344.01	Adapter
161.02	Casing cover	360.01	Bearing cover
183.01	Support foot	382.01	Bearing carrier

1.2 Painting instructions for other parts

Motor is painted by motor manufacturer. Not painted in pump factory

Couplig is coated by coupling manufacturer. Not painted in pump factory.

Painting instructions for coupling guard

Part no.	Description	Painting instructions
685.01	Guard end	Powder painting 1 x top coat 0.0040 in (100 µm)
686.01	Guard jacket	Dry film nominal thickness 0.0040 in (100 µm) (EP 100/1) Color shade NCS 0582-Y09R

Hot galvanizing instructions for baseplate

Part no.	Description	Painting instructions
890.01	Baseplate	Hot galvanizing Fe/ZnK Class A SFS2765

Hot galvanizing will be done according to standard SFS2765.

COPYRIGHT © SULZER PUMPS FINLAND OY

COPYRIGHT © SULZER PUMPS FINLAND OY

Painting instructions for baseplate

Part no.	Description	Painting instructions
890.01	Baseplate	Upper surface of the bulk and bulk sides 2 inch from the upper surface. Inner side of the motor stand and pump stands. ISO 12944-5/S3.18 EP200/3-FeSa 2 ½ ISO 12944-5/S3.22 EPZn[R] EP 200/3-FeSa 2 1/2
566.01	Riser block	
566.02	Riser block	
566.03	Riser block	

Easley 30.4.2010

Alan Crawford
President
Sulzer Process Pumps (US) Inc.

COPYRIGHT © SULZER PUMPS FINLAND OY

SULZER

Performance Certificate

Series	Page
CERTIFICATION September 2008	H05a

SPP id: 100430 / Replaces 080915 / en / N04386_100112596 / 3 / Page 1 (2)

Customer DYNATEC, INC.		Customer Order No. 734522	Customer Item/Tag N/A
Project name DYNATEC, INC.			Witnessed ☐ Yes / No ☒
Manufacturer Sulzer Process Pumps (US) Inc		Test date 11.07.2013	Test standard ANSI/HI A
Product type CPT21-4	Serial number 100112596	Impeller 610460 / 8,0 in	Water temperature 74 °F
Guaranteed values for acceptance test:			
Specified speed 1775 rpm	Flow 500,07 gpm	Head 45,01 feet	Efficiency 65,00 %
	Test results based on the specified speed of rotation		
Test speed 1772 rpm	Flow 500,07 gpm	Head 45,96 feet	Efficiency 103,60 %

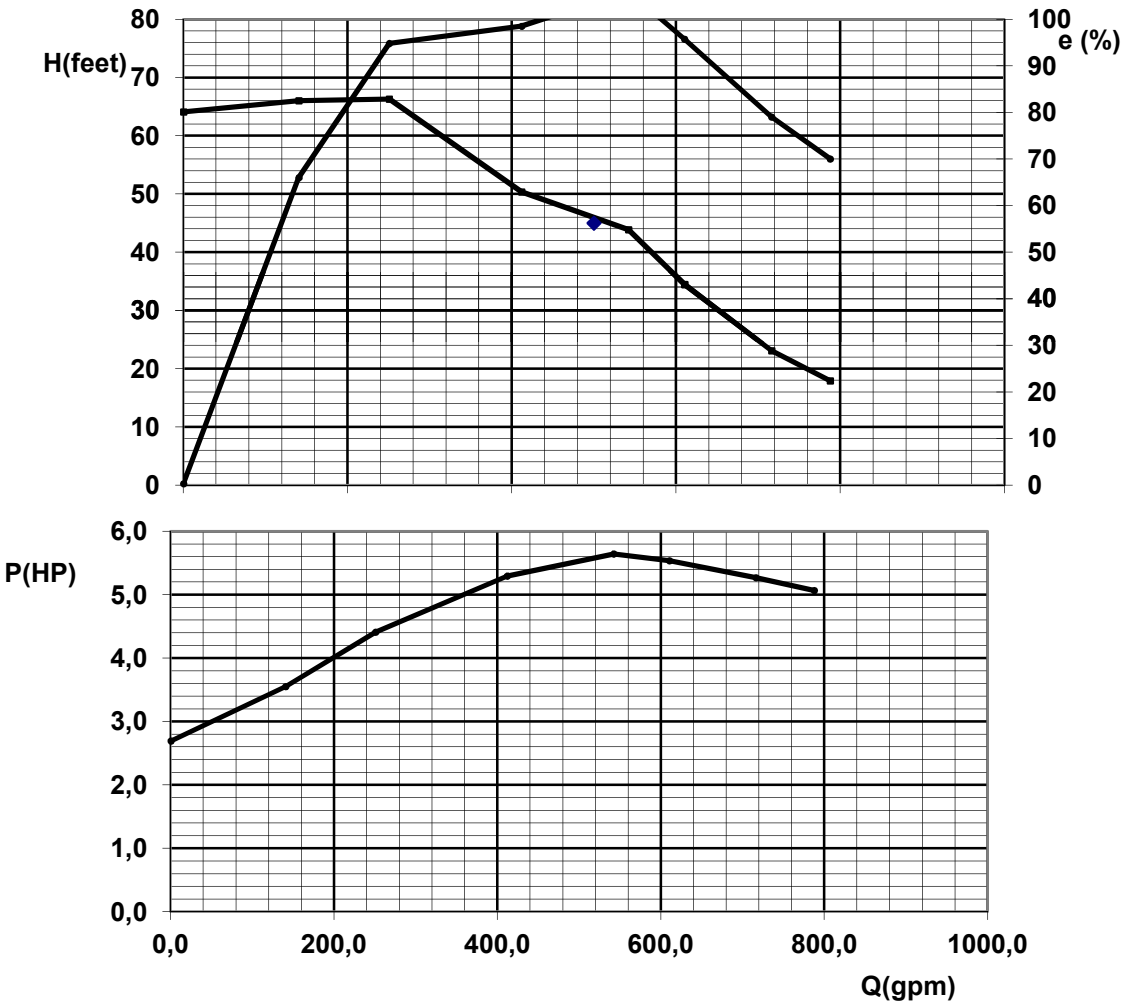

The above items have been tested in accordance with the requirements of the test procedure/standard and are acceptable to specification.

Easley 11.07.2013

Scott Holliday
Quality, Environmental, Safety, and Health Manager

Manufacturer		Test date	Test standard
Sulzer Process Pumps (US) Inc		11.07.2013	ANSI/HI A
Product type	Serial number	Impeller	Water temperature
CPT21-4	100112596	610460 / 8,0 in	74 °F
Guaranteed values for acceptance test:			
Specified speed	Flow	Head	Efficiency
1775 rpm	500,07 gpm	45,01 feet	65,00 %
	Test results based on the specified speed of rotation		
Test speed	Flow	Head	Efficiency
1772 rpm	500,07 gpm	45,96 feet	103,60 %

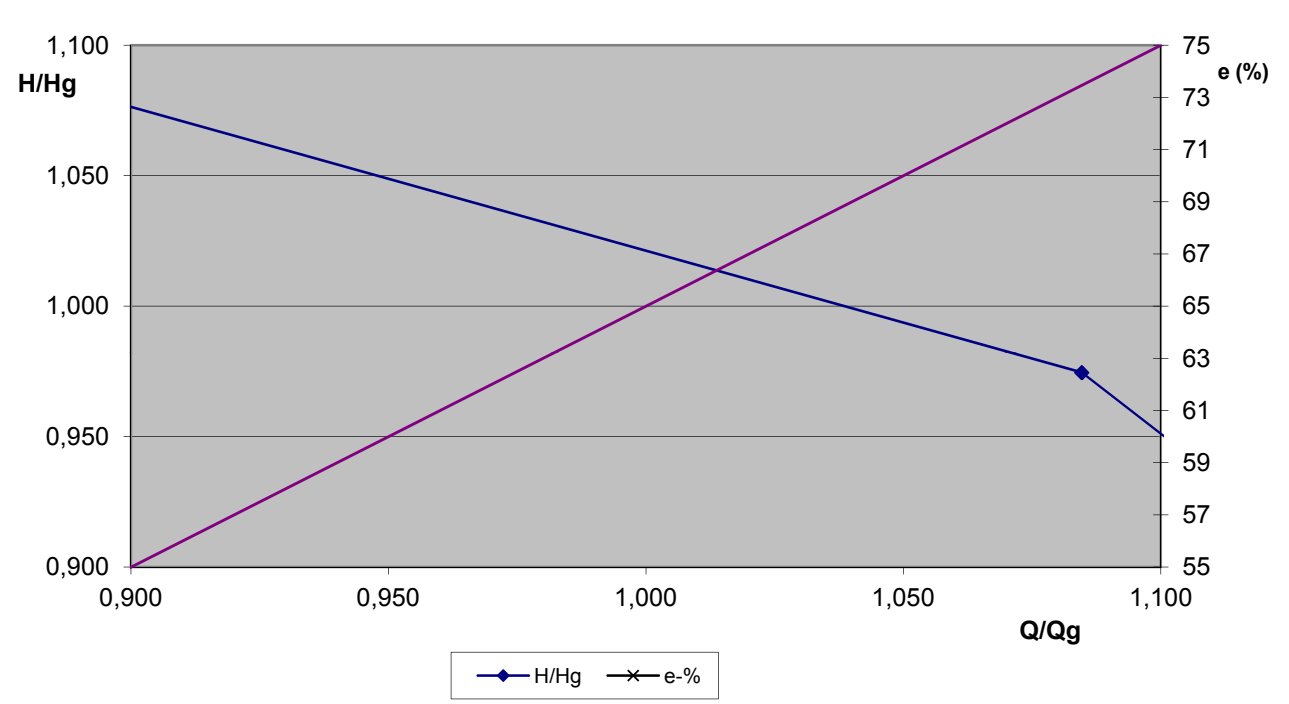

Head/Flow relative to guarantee value	Tolerance cross ISO 9906 Grade1/Grade2/Annex A/Sulzer

Easley 11.07.2013

Scott Holliday

Scott Holliday
Quality, Environmental, Safety, and Health Manager

SIEMENS

Installation • Operation • Maintenance

Instructions

Induction Motors
143-449 Frame

NMIM-L1000

SIEMENS

TABLE OF CONTENTS

INSPECTION 4

STORAGE 4

INSTALLATION 4

OPERATION 5

VOLTAGE REGULATION 6

MAINTENANCE 7
- BEARING LUBRICATION 7
- INSULATION RESISTANCE 7
- CLEANING 8

VERTICAL MOTOR THRUST BEARINGS 8

SERVICE 8

WARRANTY 9

These instructions do not purport to cover all details or variations in equipment, nor to provide for every possible contingency to be met in connection with installation, operation or maintenance. Should further information be desired or should particular problems arise which are not covered sufficiently for the purchaser's purposes, the matter should be referred to the local Siemens Sales Office.

The contents of this instruction manual shall not become part or modify any prior or existing agreement, commitment or relationship. The sales contract contains the entire obligation of Siemens. The warranty contained in the contract between the parties is the sole warranty of Siemens. Any statements contained herein do not create new warranties or modify the existing warranty.

INTRODUCTION

THIS EQUIPMENT CONTAINS HAZARDOUS VOLTAGES, ROTATING PARTS AND HOT SURFACES. SEVERE PERSONAL INJURY OR PROPERTY DAMAGE CAN RESULT IF SAFETY INSTRUCTIONS ARE NOT FOLLOWED. ONLY QUALIFIED PERSONNEL SHOULD WORK ON OR AROUND THIS EQUIPMENT AFTER BECOMING THOROUGHLY FAMILIAR WITH ALL WARNINGS, SAFETY NOTICES, AND MAINTENANCE PROCEDURES CONTAINED HEREIN. THE SUCCESSFUL AND SAFE OPERATION OF THIS EQUIPMENT IS DEPENDENT UPON PROPER HANDLING, INSTALLATION, OPERATION AND MAINTENANCE.

QUALIFIED PERSON

For the purpose or this manual and product labels, a qualified person is one who is familiar with the installation, construction and operation of the equipment, and the hazards involved. In addition, he has the following qualifications:

a) Is trained and authorized to energize, de-energize, clear, ground and tag circuits and equipment in accordance with established safety practices.

b) Is trained in the proper care and use of protective equipment such as rubber gloves, hard hat, safety glasses or face shields, flash clothing, etc., in accordance with established safety practices.

DANGER

For the purpose of this manual and product labels, DANGER indicates death, severe personal injury or substantial property damage will result if proper precautions are not taken.

WARNING

For the purpose of this manual and product labels, WARNING indicates death, severe personal injury or substantial property damage can result if proper precautions are not taken.

CAUTION

For the purpose of this manual and product labels, CAUTION indicates minor personal injury or property damage can result if proper precautions are not taken.

INSPECTION

Care is taken at the factory to assure that the motor arrives at its destination in first class condition. If there is evidence of rough handling or damage in shipping, file a claim at once with the carrier and notify your Siemens Sales Office.

Examine the outside of the motor carefully for damage, with particular attention to conduit box, fans, and covers. Inspect and tighten all hardware and accessories which may have become loosened during shipping and handling. Turn the shaft by hand to be sure that it rotates freely. If the motor has been mishandled sufficiently to break external parts, the end shield should also be removed to check for internal damage unless the motor is explosion-proof. See warning below on explosion proof motors.

WARNING

Explosion-proof motors—these motors are constructed to comply with the U.L. Label Service Procedure Manual. When repairing and reassembling a motor that has an underwriter's label, it is imperative that the unit be reinspected and:

1. All original fits and tolerance be maintained.
2. All plugs and hardware be securely fastened.
3. Any parts replacements, including hardware, be accurate duplicates of the originals.

Repair work on explosion-proof motors can only be done by the original manufacturing or U.L. certified shops. Violations of any of the above items will invalidate the significance of the U.L. Label.

STORAGE

Motors must be stored in a clean, dry, well ventilated location free from vibration and rapid or wide temperature variations. If the unit is to be stored longer than three months, consult factory. Ball bearing motors are shipped from the factory properly lubricated and ready to operate. When in storage, the motor shaft must be turned several rotations every month and the bearing relubricated every year. On non-explosion-proof TEFC motors, a removable plug in the bottom of the frame or housing permits removal of accumulated moisture. Drain regularly if storage atmosphere result in formation of condensation.

INSTALLATION

Installation must be handled by qualified service or maintenance personnel. The motor foundation must rigidly support all four feet in the same plane. Place shims under the motor feet, as required, so they will not be pulled out of plane when mounting bolts are tightened. All wiring to the motor and control must be in accordance with the National Electrical Code and all local regulations. Before drive is connected, momentarily energize motor to check that direction of rotations proper. For direct drive, accurate alignment is 0.004 inch/ft. (radius to dial indicator = one foot.)

Any change in shims requires rechecking alignment. When alignment is within limits, dowel two feet of each unit. When installing flat belt pulley, V-belt sheave, spur or helical pinion or chain drives, be certain that they are within NEMA limitations. Refer to NEMA motor and general standards, MG-1 14.07 and 14.42.

OPERATION

Repeated trial starts can overhead the motor and may result in motor burnout (particularly for across the line starting). If repeated trial starts are made, allow sufficient time between trials to permit heat to dissipate from windings and rotor to prevent overheating. Starting currents are several times running currents, and heating varies as the square of the current.

After installation is completed, but before motor is put in regular service, make an initial start as follows:

1. Check motor starting and control device connections against wiring diagrams.
2. Check voltage, phase, and frequency of line circuit (power supply) against motor nameplate.
3. If possible, remove external load (disconnect drive) and turn shaft by hand to ensure free rotation. This may have been done during installation procedure; if so, and conditions have not changed since, this check may not be necessary.
   a. If drive is disconnected, run motor at no load long enough to be certain that no unusual conditions develop. Listen and feel for excessive noise, vibration, clicking, or pounding. If present, stop motor immediately. Investigate the cause and correct before putting motor in service.
   b. If drive is not disconnected, interrupt the starting cycle after motor has accelerated to low speed. Carefully observe for unusual conditions as motor coasts to a stop.
4. When checks are satisfactory, operate at minimum load and look for unusual condition. Increase load slowly to maximum. Check unit for satisfactory operation.

CAUTION

Guard against overloading. Overloading causes overheating and overheating means shortened insulation life. A motor subjected to a 10°C temperature rise above the maximum limit for the insulation may cause the insulation life to be reduced by 50%. To avoid overloading, be sure motor current does not exceed nameplate current when nameplate voltage is applied.

Electric motors operating under normal conditions become quite warm. Although some places may feel hot to the touch, the unit may be operational within limits. Use a thermocouple to measure winding temperature when there is any concern.

The total temperature, not the temperature rise, is the measure of safe operation. Investigate the operating conditions if the total temperature measured by a thermocouple placed on the winding exceeds:

230°F (110°C) for class “B” insulation

275°F (135°C) for class “F” insulation

302°F (150°C) for class “H” insulation

VOLTAGE REGULATION

Motors will operate successfully under the following conditions of voltage and frequency variation, but not necessarily in accordance with the standards established for operation under rated conditions:

a. When the variation in voltage does not exceed 10% above or below normal, with all phases balanced.

b. When the variation in frequency does not exceed 5% above or blow normal.

c. When the sum of the voltage and frequency does not exceed 10% above or below normal (provided the frequency variation does not exceed 5%).

MAINTENANCE

Failure to properly maintain the equipment can result in severe personal injury and product failure. The instructions contained herein should be carefully reviewed, understood and followed. The following maintenance procedures should be performed regularly:

1. Bearing lubrication
2. Insulation resistance check
3. Cleaning

This checklist does not represent an exhaustive survey of maintenance steps necessary to ensure safe operation of the equipment. Particular applications may require further procedures. Should further information be desired or should particular problems arise which are not covered sufficiently for the purchaser's purposes, the matter should be referred to the local Siemens Sales Office.

Dangerous voltages are present in the equipment which can cause severe personal injury and product failure. Always de-energize and ground the equipment before maintenance. Maintenance should be performed only by qualified personnel.

The use of unauthorized parts in the repair of the equipment, tampering by unqualified personnel, or removal or alteration of guards or conduit covers will result in dangerous conditions which can cause severe personal injury or equipment damage. Follow all safety instructions contained herein.

BEARING LUBRICATION

CAUTION

Do not lubricate motor while in operation, since excess grease will be forced through the bearings and into the motor before it will force its way out of the drain plug. Excess grease accumulation on windings reduces insulation life.

Bearing life is assured by maintaining proper alignment, proper belt or chain tension, and good lubrication at all times.

Prior to shipment, motor bearings are lubricated with the proper amount and grade to provide six months of satisfactory service under normal operation and conditions.

For best results, grease should be compounded from a polyurea base and a good grade of petroleum oil. It should be of No. 2 consistency and stabilized against oxidation. Operating temperature range should be from -15°F to +250°F for class B insulation, and to +300°F fir class F and H. Most leading oil companies have special bearing greases that are satisfactory.

Relubricate bearings every six months (more often if conditions require), as follows:

1. Stop the motor. Lock out the switch.
2. Thoroughly clean off pipe plugs and remove from housings.
3. Remove hardened grease from drains with stiff wire or rod.
4. Add grease to inlet with hand gun until small amount of new grease is forced out of drain.
5. Remove excess grease from ports, replace inlet plugs, and run motor 1/2 hour before replacing drain plug.
6. Put motor back in operation.

INSULATION RESISTANCE

Check insulation resistance periodically. Any approved method of measuring insulation resistance may be used, provided the voltage across the insulation is at a safe value for the type and condition of the insulation. A hand cranked megger of not over 500 volts is the most convenient and safest method. Standards of the Institute of Electrical and Electronics Engineers, Inc. (IEEE) recommended that the insulation resistance of stator windings at 75°C, measure at 500 volts DC, after one minute should not be less than:

$$\frac{\text{Rated voltage of machine} + 1000}{1000} = \text{Insulation resistance in Megohms}$$

This formula is satisfactory for most checks. for more information, see IEEE Standard No. 43, “Recommended Practice for Insulation Resistance Testing of AC Rotating Machinery.”

SIEMENS

Siemens Energy & Automation, Inc.
Motors and Drives Division
14000 Dineen Drive
Little Rock, Arkansas 72206

CLEANING

WARNING

Do not attempt to clean motor while it is operating.. Contact with rotating parts can cause severe personal injury or property damage. Stop the motor and lock out switch before cleaning.

The motor exterior must be kept free of oil, dust, dirt, water, and chemicals. For fan cooled motors, it is particularly important to keep the air intake openings free of foreign material. Do not block air outlet or inlet.

On non-explosion-proof TEFC motors, a removable plug in the bottom center of the motor frame or housing permits removal of accumulated moisture. Drain regularly.

VERTICAL MOTOR THRUST BEARINGS

Top bearings — high external thrust from the driven unit is usually carried by he top bearing or bearings. If replacement is necessary, the new bearing must be the same size and type as the original. Duplex bearings must also be the same type and mounted in an identical manner. When angular contact type bearings are replaced, the new bearing must have the same thrust capacity.

Bottom bearings — grease lubricated lower bearings adequately lubricated at the factory for at least three months operation. The relubrication procedure is the same as outlined above under "Bearing Lubrication." It is important to maintain the lower cavity full of grease at all times.

The correct replacement bearings are given on the nameplate by AFBMA (Anti-Friction Bearing Manufacturers Association) number.

SERVICE

For immediate action on your motor problems call your certified service center or contact your nearest Siemens District Office.

Siemens Energy & Automation, Inc.
Industrial Products Division
14000 Dineen Drive
Little Rock, Arkansas 72206

© 2001 Siemens Energy & Automation, Inc.

Bulletin NMIM-L1000
10M 7/01TI Printed in U.S.A.

RGZEESD
Severe Duty – TEFC

Electrical Data	**Enclosure**	Severe Duty - TEFC
	Efficiency	NEMA Premium
	HP Range	1-400
	Frame Size	140-S440
	Frequency	60 Hertz
	Power	3 - Phase
	Voltage	230/460 460 only 25HP and above
	Service Factor (sine wave)	1.15
	Electrical Design	NEMA design B (except as noted)
	Stator Windings	Copper - Random Wound
	Insulation	Class F, meets NEMA MG1-2003, Part 31
	Temperature Rise (sine wave)	Class B @ 1.0SF, Class F @ 1.15SF
	Warranty	3 Years

RGZZESD
Hazardous Duty – TEFC

Electrical Data	Enclosure	Hazardous Duty - TEFC
	Efficiency	High
	HP Range	1-300
	Frame Size	140-440
	Frequency	60 Hertz
	Power	3 - Phase
	Voltage	230/460 460 only 25HP and above
	Service Factor (sine wave)	1
	Electrical Design	NEMA design B
	Stator Windings	Copper - Random Wound
	Insulation	Class F
	Temperature Rise (sine wave)	Class B @ 1.0SF
	Warranty	3 Years

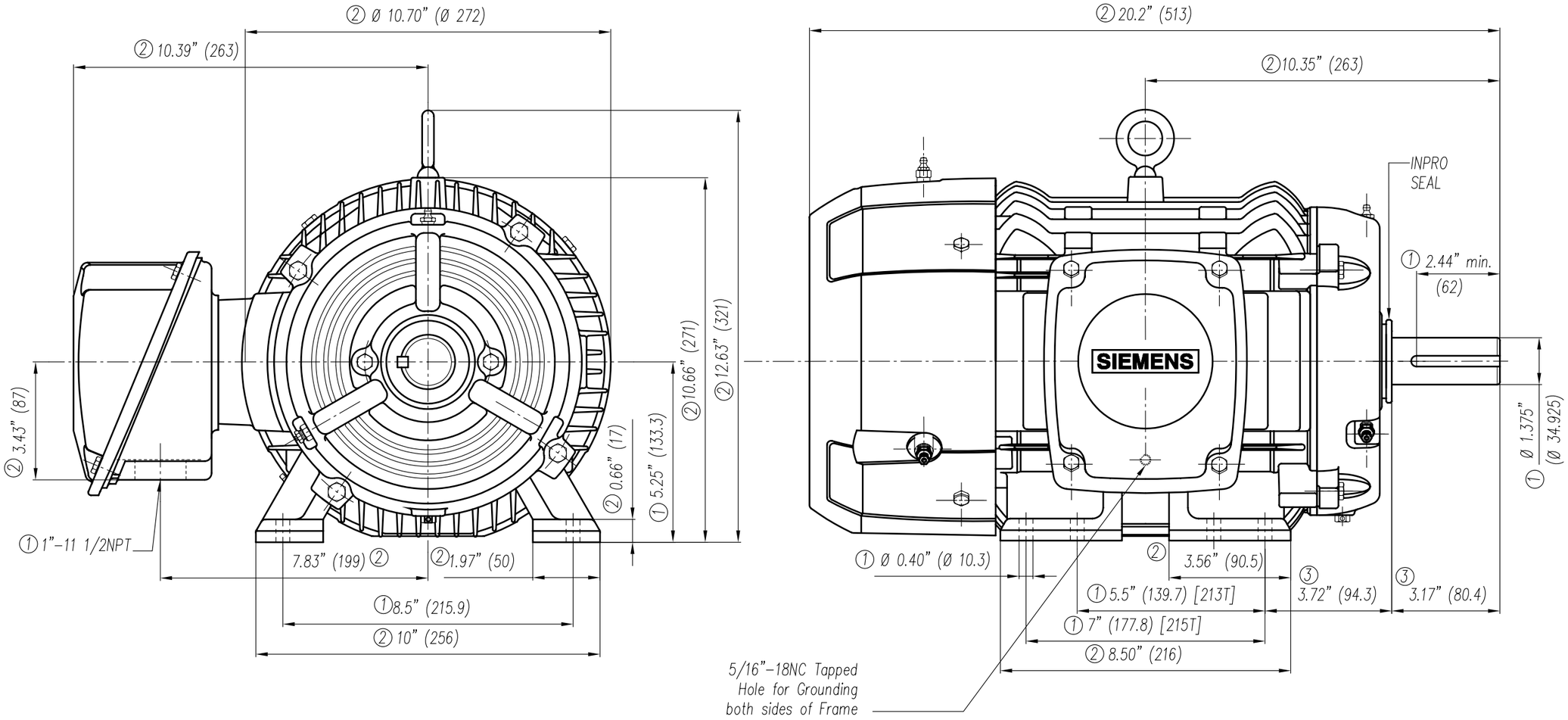

①Tolerances According to NEMA Std.

②All these dimensions corresponding to assemblies and castings shall have a tolerance as per DIN standard 1686-GTB 19.

③Not According to NEMA Std.

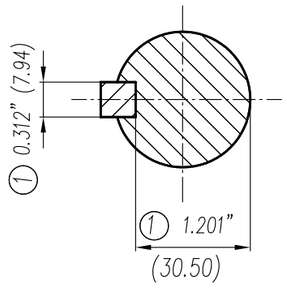

Keyseat detail

CERTIFIED PRINT

CUSTOMER: Sulzer

PO#	SO#
4500334767	3003367956

HP	RPM	FRAME	TYPE	VOLTS	PH	HZ
10	1800	215T	SD100	208-230/460	3	60

Sulzer Part No.: J751301004/PB

②

Tolerance in mm. according to DIN-1686-GTB-19	
to 18	± 4.5
Over 18 to 30	± 4.7
Over 30 to 50	± 5
Over 50 to 80	± 5.5
Over 80 to 120	± 6
Over 120 to 180	± 6.5
Over 180 to 250	± 7
Over 250 to 315	± 7.5
Over 315 to 400	± 8
Over 400 to 500	± 8.5
Over 500 to 630	± 9.5
Over 630 to 800	± 10

Quantity: 04 03 02 01

Remark

Parts and Measure

Drawing No. / Norm No. | Item No. | Material | Weight Lbs.

European Proyection

Modific.

Dimensions in inches (mm)

	Date	Name
Drawn	17/11/05	Contreras
Checked		
Std. Ckd.		

SIEMENS
GUADALAJARA FACTORY

Dimension Drawing NEMA

NNM

Type: 1LE2 SD100 IEEE841 213/215T FRAME 2...8 Pol.

Scale W/O

3MSE 222 0845

Ref. 3MSE 223 0840 | Replace.

2/2

F260/1005

Sulzer Part No.: J751301004/PB

SIEMENS

NEMA Motor Data

Ordering data : **1LE2321-2AB21-4AA3**

Client-order-no. / :
Order-no. / :
Offer-no. / :
Remarks / :

Item-no. / :
Consignment-no. / :
Project / :

Nameplate Data

Type	SD100 - NEMA Premium Efficiency		
HP	10.0	Rating	Cont.
Voltage	208-230/460V, 60HZ	Ins. Class	Class F (Standard)
Amps	25.0 / 12.5	S.F.	1.15
FL RPM	1755.0	Amb. Temp.	40 deg C
FL Efficiency	91.7 %	Temp. Rise	Class B
FRAME	215T'	kVA Code	H
DE AFBMA	40BC02JPP3	NEMA Des	B
ODE AFBMA	40BC02JPP3	Mtr WT	214.0
Hertz	60	Ph	3

Bearing Data

DE Bearing Size	6208 ZZ C3
DE Bearing Type	Ball Bearing
DE AFBMA	40BC02JPP3
ODE Bearing Size	6208 ZZ C3
ODE Bearing Type	Ball Bearing
ODE AFBMA	40BC02JPP3

Mechanical Data

SAFE STALL TIME	HOT (s)	20.0	
	COLD (s)	36.0	
Rtr wt (lbs) 0.0	Rtr WK2	0.8679	
FLT (ft-lbs) 30.0	LRT	81.0	BDT 123.0
Ext Load Inertia (WK2) Capability		105.0	

Typical Performance Data

Load	No Load	1/2	3/4	Full Load	LRC
Efficiency		91.7 %	92.2 %	91.7 %	
Power Factor		63.8 %	76.2 %	81.7 %	
Current (A)	6.1 A			12.5 A	81.0 A

Typical Noise Data

A-weighted Sound Pressure Level at 3 feet

Octave Band Center Frequencies Hertz (Hz)

63	125	250	500	1000	2000	4000	8000		
0.0	40.0	58.0	62.0	64.0				SPL	67.0
								SPwrL	77.0

Wiring Connection Information

Description: 3 PHASE - 9 LEAD - WYE

Voltage	L1	L2	L3	Connected together
-- -- --	-- -- --	-- -- --	-- -- --	-- -- --
HIGH	T1	T2	T3	-- -- --

Lubrication Information

Manufacturer	Mobil Polyrex EM or equal
Type	Polyurea (standard)
DE Capacity (oz.)	0,3
ODEnd Capacity (oz.)	0,3

Relubricate bearings every six months (more frequent if conditions require). See Instruction Manual.

Special configurations :

Technical and ordering data are subject to change. There may be discrepancies between calculated and rating plate values.

This is the Original Document in English Language

The designation **ATEX** (**A**tmosphere **E**xplosibles) has established itself for the new guidelines. **ATEX** controls all regulations for the condition of explosion-proof equipment.

Model No. _____ Category _____ Reference _____
Mfg Year_____ Max Temperature _____

1. General Information

1.1. Viva Couplings are designed to provide a mechanical connection between the rotating shafts of mechanical equipment, using a torsionally soft flexible element to accommodate inherent misalignment while transmitting the power and torque between the shafts.

1.2. These instructions are intended to help you install and maintain your Viva coupling. Please read these instructions prior to installing the coupling, and prior to maintenance of the coupling and connected equipment. Keep these instructions near the coupling installation and available for review by maintenance personnel.

1.3. Rexnord Industries, LLC owns the copyright of this material. These Installation and Maintenance instructions may not be reproduced in whole or in part for competitive purposes.

1.4. Symbol descriptions:

STOP Danger of injury to persons.

Damages on the machine possible.

Pointing to important items.

2. Safety and Advice Hints

STOP **DANGER!**

2.1. Safety should be a primary concern in all aspects of coupling installation, operation, and maintenance.

2.2. Proper lockout-tag out procedures must be followed to safeguard against unintentional starting of the equipment.

2.3. Because of the possible danger to person(s) and/or property, from accidents which may result from improper use or installation of these products, it is extremely important to follow the proper selection, installation, maintenance and operational procedures.

2.4. All personnel involved in the installation, service, operation, maintenance, and repair of this coupling and the connected equipment must read, understand and comply with these Installation and Maintenance instructions.

2.5. All rotating power transmission products are potentially dangerous and can cause serious injury. They must be properly guarded in compliance with OSHA, ANSI, ATEX, European machine safety standards and other local standards. It is the responsibility of the user to provide proper guarding.

PRECAUTION! For this coupling to meet the ATEX requirements, you must precisely follow these installation and maintenance instructions, and the supplement form 0005-08-49-01. This supplement outlines the ATEX requirements. If the operator does not follow these instructions, the coupling will immediately be considered non-conforming to ATEX.

2.6. For ATEX requirements the guard must have a minimum of 12.7 mm (1/2 inch) radial clearance to the coupling outside diameter (coupling sizes shown in Table 1 are equivalent to the coupling outside diameter in millimeters) and allow for proper ventilation.

2.7. Make sure to disengage the electrical power and any other sources of potential energy before performing work on the coupling.

2.8. Do not make contact with the coupling when it is rotating and/or in operation.

2.9. All work on the coupling must be performed when the coupling is at rest under no load.

3. Rexnord Viva Coupling Design and Part Numbers

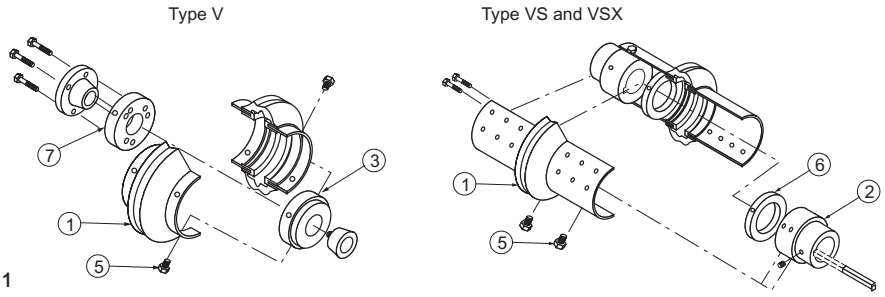

Figure 1

Table 1 – Viva Part Numbers

Coupling Size	Elastomer Element			Hubs				Element Capscrews (5)	High Speed Rings (6)
	Type V (1)	Type VS (1)	Type VSX (1)	Rough Bore Steel (2)	Taper Bushed Hubs – Inch* (3)	British Standard Whitworth Threads (BSW)	QD Hubs* (7)		
110	7392646	7392702	7392702X	7392746	7392768	7392770	7392766	7393097	7393046
125	7392650	7392706	7392706X	7392774	7392797	7392799	7392795	7393097	7393049
130	7392654	7392710	7392710X	7392803	7392827	7392829	7392825	7393097	7393052
150=	7392656	7392712	7392712X	7392833	7392856	7392858	7392854	7393101	7393055
170=	7392658	7392714	7392714X	7392833	7392856	7392858	7392854	7393101	7393055
190	7392662	7392718	7392718X	7392862	7392884	7392886	7392882	7393101	7393058
215	7392666	7392722	7392722X	7392890	7392912	7392914	7392910	7393105	7393061
245	7392670	7392726	7392726X	7392918	7392933	7392935	7392931	7393105	7393064
290	7392674	7392730	7392730X	7392939	7392954	7392956	7392952	7393109	7393067
365	7392678	7392734	7392734X	7392960	7392966	7392969	7392964	7393120	7393070
425	7392682	7392738	7392738X	7392972	7392978	7392981	7392976	7393120	7393073
460	7392686	7392742	7392742X	7392984	7392990	7392993	7392988	7393120	7393076

Note: Hubs are interchangeable with standard or spacer flex elements.
* Bushings are not included.
= V150/V170 utilize same hubs, high speed rings and capscrews

4. Hub mounting

DANGER!

Be sure to disengage the electrical power and any other sources of potential energy before you perform work on the hub and coupling assembly.

4.1. Examine the coupling assembly to insure there is no visible damage.

4.2. Clean the hub bores and shafts using lint free cloth. Remove any nicks or burrs.

4.3. When assembled, the key(s) should have a close side-to-side fit in the keyway in both the hub and shaft, with a slight clearance over the top of the key.

CAUTION: When heating hubs is required, use of an oven is preferred. An open flame is not recommended. If flame heating is considered mandatory, it is important to provide uniform heating to avoid distortion and excessive temperature. A thermal stick (crayon marker) applied to the hub surface will help determine the hub temperature.

DANGER!

Touching hot hubs causes burns. Wear safety gloves to avoid contact with hot surfaces.

Rexnord Industries, LLC, 5555 S. Moorland Rd., New Berlin, WI 53151-7953
Telephone: 262-796-4060 Fax: 262-796-4064
e-mail: info@rexnord.com web: www.rexnord.com

4.4. Rexnord Viva hubs can be installed:

- flush with the shaft end (D)
- extended beyond the end of the shaft (E)
- recessed behind the shaft end (F)

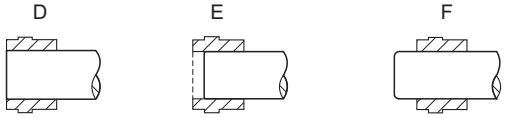

Figure 2

ATTENTION! Shaft engagement length should be >0,8 times shaft diameter, bushed hubs must engage 100%.

5. Straight Bore with Clearance/Slip Fit

5.1. Install the key(s) in the shaft.

5.2. Check to be sure that the set screw(s) in the hub does not protrude into the keyway and/or the bore. If needed, loosen the set screw to provide clearance during assembly.

5.3. Slide the hub up the shaft to the desired axial position.

ATTENTION! Use half element to set proper hub spacing.

5.4. Assemble and tighten the set screw(s), using a calibrated torque wrench, to the values shown in Table 2.

Table 2 - Set Screw Tightening Torque

Set Screw Thread Size	Tightening torque			Internal Hex Size	Set Screw Thread Size	Tightening torque			Internal Hex Size
inch	lb-in	lb-ft	Nm	inch	mm	lb-in	lb-ft	Nm	mm
1/4	66	6	7	1/8	M6	55	5	6	M3
5/16	132	11	15	5/32	M8	110	9	12	M4
3/8	240	20	27	3/16	M10	220	18	25	M5
1/2	600	50	68	1/4	M12	440	37	50	M6

ATTENTION! Never use two set screws with one on top of the other in the same tapped hole.

6. Straight Bore with Interference Fit

6.1. Accurately measure the bore and shaft diameters to assure proper fit.

6.2. Install the key(s) in the shaft.

6.3. Heat the hub in an oven until the bore is sufficiently larger than the shaft.

6.4. 350°F (177°C) is usually sufficient for carbon steel hubs. Do not exceed 500°F (260°C).

6.5. Higher temperatures may be required for higher interference fit levels where alloy steel hubs may be encountered. A general rule to consider is that for every 160°F increase in temperature, steel will expand 0.001 inch for every inch of shaft diameter (or .029 mm/100°C). When calculating temperatures, also consider additional expansion to provide clearance and allow for a loss of heat and subsequent shrinkage during the handling process.

6.6. With the hub expanded, install it quickly on the shaft to the desired axial position. A pre-set axial stop device can be helpful.

7. Tapered bushed hubs

7.1. When using tapered bushings, follow bushing manufacturers instructions.

8. Rexnord Viva "Type V" coupling hub / element mounting options (see table 3)

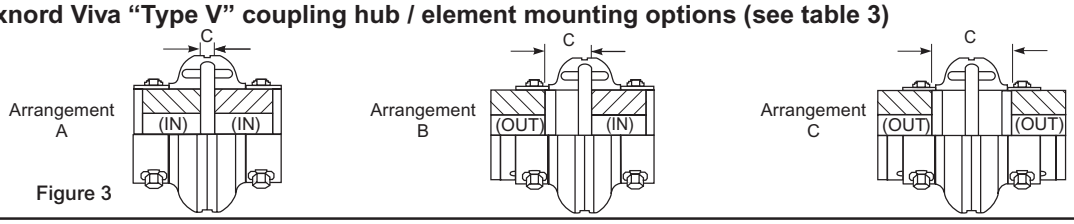

Figure 3

Table 3 – Type V Mounting Options

Hub Arrangement	Coupling Sizes											
	110	125	130	150	170	190	215	245	290	365	425	460
	Dimension C (mm)											
A	9	9	7	9	9	7	11	7	8	20	19	19
B	32	32	31	35	35	34	38	40	54	76	76	76
C	55	55	55	60	60	60	64	73	94	131	133	132

9. Rexnord Viva "Type VS" coupling hub / element mounting Options (See table 4)

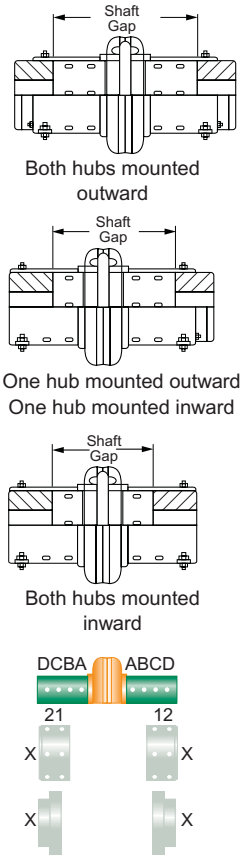

Figure 4

Table 4 - Spacer coupling (VS) Hub mounting options for industry shaft gaps

Rexnord Viva coupling size	ISO (mm)					Ansi (inch)				
	100	140	180	250	300	3,5	5	7	9,5	12
VS 110	C2-B1	C1-C1				B1-B1	C2-C1			
	101	139				3,47	4,98			
VS 125	B1-B1	C1-C2*				B1-B2	C2-C2*			
	101	139				3,42	4,93			
VS 130	C2-C2	C1-C1				B1-B1	C2*-C2*			
	100	140				3,50	5,12			
VS 150	B1-B1	C1-C1	D1-D1			B1*-D1*	D1*-D1*	D1-D2*		
	102	140	179			3,52	5,04	6,87		
VS 170	B1-B1	C1-C1	D1-D1			B1*-D1*	D1*-D1*	D1-D2*		
	102	140	179			3,52	5,04	6,87		
VS 190	B1-B1	C1-C1	D1-D1			C1*-C1*	D1*-D1*	D1-D1		
	102	141	179			3,50	4,94	7,04		
VS 215	B1-B1	C1-C1	D1-D1			C1*-C1*	D1*-D1*	D1-D1		
	103	142	181			3,50	5,06	7,14		
VS 245	B1-B2	D1-C1*	D2-D1			B1*-D1*	B2-C1	D1-C1		
	106	142	185			3,50	4,95	6,89		
VS 290	B2*-B2*	B2*-B1	C1-B2*	C1-C1		B1*-B2*	C2*-B1*	B2-B1	C1-C2	
	100	143	179	257		3,54	4,92	6,94	9,70	
VS 365		C1*-C1*	B1-B1	C1-C1	D1-D1		B1-B1*	B1-B1	C1-C1	D1-D1
		137	180	250	300		4,86	7,09	9,85	11,81
VS 425		C2*-C2*	B1-B1	C1-C1	D1-D1		B1-B2*	B1-B1	C1-C1	D1-1D
		137	180	250	299		4,86	7,08	9,84	11,77
VS 460		C2*-C2*	B1-B1	C1-C1	D1-D1		B1-B2*	B1-B1	C1-C1	D1-D1
		137	180	250	299		4,86	7,08	9,84	11,77

* hub mounted inward

10. Rexnord Viva element mounting

10.1. Mount first half element to the hubs using only original Rexnord Viva fasteners provided (do not substitute with non-approved capscrews).

10.2. Rotate the shaft 180 degrees and secure second half element.

10.3. If shaft cannot be rotated, mount half elements at 90 degrees.

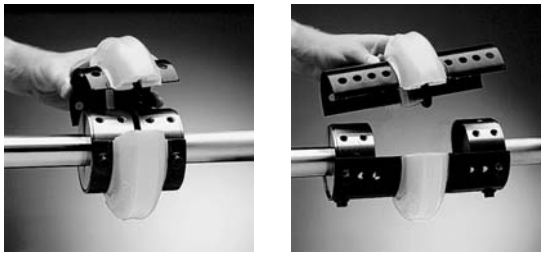

Type V Type VS and VSX

Figure 5

ATTENTION! Elements are weight balanced and must be used in pairs as packaged.

Rexnord Industries, LLC, 5555 S. Moorland Rd., New Berlin, WI 53151-7953
Telephone: 262-796-4060 Fax: 262-796-4064
e-mail: info@rexnord.com web: www.rexnord.com

DANGER!

Incorrectly tightened capscrews could cause coupling component(s) to dislodge during operation and result in personal injury. TIGHTEN CAPSCREWS BY USING TORQUE WRENCH.

10.4. Ensure that all capscrews are tightened to the torques specified in Table 5.

Type V

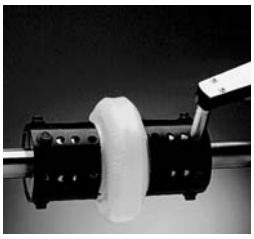

Type VS and VSX

Figure 6

Table 5 – Capscrew Torque

Viva Size	Part No.	Bolt Size	Wrench Size mm	Torque Nm	Torque ft lb	Torque in lb	Viva Size	Part No.	Bolt Size	Wrench Size mm	Torque Nm	Torque ft lb	Torque in lb
110	7393097	M8	13	27	20	240	**215**	7393105	M10	13	53	39	468
125	7393097	M8	13	27	20	240	**245**	7393105	M10	13	53	39	468
130	7393097	M8	13	27	20	240	**290**	7393109	M12	15	92	68	816
150	7393101	M10	13	53	39	468	**365**	7393120	M14	19	158	117	1404
170	7393101	M10	13	53	39	468	**425**	7393120	M14	19	158	117	1404
190	7393101	M10	13	53	39	468	**460**	7393120	M14	19	158	117	1404

ATTENTION! When installing the element, first seat all the capscrews with a light torque, then tighten all capscrews to proper torque using a torque wrench.

ATTENTION! Do not lubricate capscrew threads

ATTENTION! Capscrews must have a thread-locking adhesive applied.

ATTENTION! Capscrews must be replaced with original Rexnord Viva fastener kit after three installations or when replacing elastomer element.

DANGER!

Incorrectly tightened capscrews could cause coupling component(s) to dislodge during operation and result in personal injury.

11. Shaft Alignment

11.1. Move the equipment into place.

ATTENTION! Soft Foot – The equipment must rest flat on its base. If one or more feet of the machine are shorter, longer, or angled in some way to prevent uniform contact (a condition commonly known as “soft foot”) it must now be corrected.

11.2. Move the connected equipment to achieve acceptable alignment.

11.3. Table 6 shows recommended installation limits for Parallel and Angular alignment limits.

11.4. These dimensions are suggested for initial installation. Additional capacity is available to compensate for thermal and structural equipment movement.

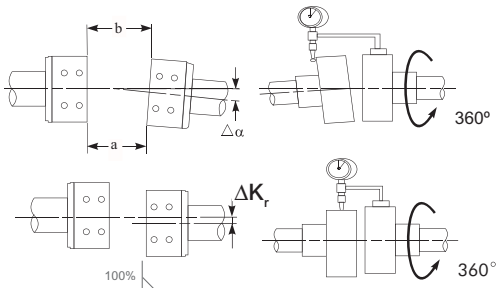

b (max)_____ mm

a (min)_____ mm

$$\Delta K_W\% = \frac{\Delta K_{W\,(actual)}}{\Delta K_{W\,(max\ limit\ table\ 6)}} \times 100$$

$$\Delta K_r\% = \frac{\Delta K_{r\,(actual)}}{\Delta K_{r\,(max\ limit)}} \times 100$$

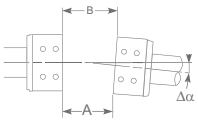

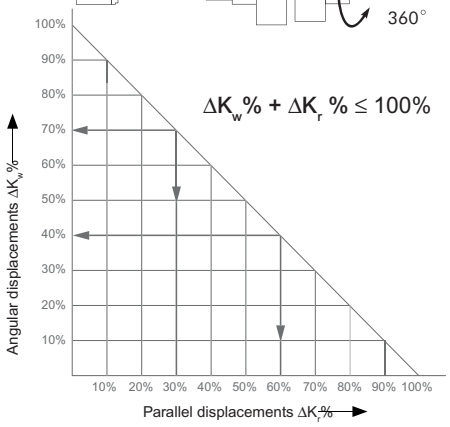

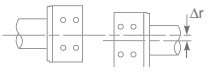

Table 6 - Drive Alignment Limits (max)

	(b-a) mm	Δ Kr mm	(b-a) inch	Δ Kr inch
110	4,2	1,6	0.165	0.063
125	4,9	1,6	0.193	0.063
130	5,5	1,6	0.217	0.063
150=	6,1	1,6	0.240	0.063
170=	6,6	1,6	0.260	0.063
190	6,1	2,4	0.240	0.095
215	7,3	2,4	0.287	0.095
245	8,9	2,4	0.350	0.095
290	11,2	2,4	0.441	0.095
365	8,2	3,2	0.323	0.126
425	9,9	3,2	0.390	0.126
460	9,4	3,2	0.370	0.126

ATTENTION! Improper alignment of the equipment or hubs may result in hub contact with equipment or guard and sparking.

12. Preventative Maintenance

DANGER!

Do not make contact with the coupling when it is rotating and/or in operation

12.1. Periodic visual inspection is necessary to evaluate the condition of the flex element. Inspection can be done during the operation using a strobe light.

12.2. When inspecting the element look for:
- Fatigue cracks at element splits
- Urethane Discoloration
- Surface cracking in body of Urethane element.

ATTENTION! Replace Element if necessary.

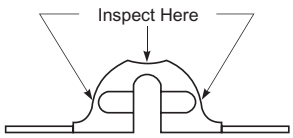

Figure 8

13. Element Replacement

DANGER!

Stop the motor and lock it out to prevent start-up during installation of coupling.

13.1. Always replace both half elements.

13.2. Install both half elements from the same box.

13.3. Follow installation instructions (see Section 5, Rexnord Viva Element Installation).

DANGER!

Tighten element capscrews to proper torque by using a torque wrench (see Table 3).

Rexnord Industries, LLC, 5555 S. Moorland Rd., New Berlin, WI 53151-7953
Telephone: 262-796-4060 Fax: 262-796-4064
e-mail: info@rexnord.com web: www.rexnord.com

Intended use

20100430 / Replaces 20020501 / en / **N15252**

Contents *Page*

1 General 1

2 Document identification 2

3 Type designation 2

4 Nameplate information 3

5 Capacity and head 3

COPYRIGHT © SULZER PUMPS FINLAND OY

COPYRIGHT © SULZER PUMPS FINLAND OY

1 General

The pump and its accessories may only be used for the purpose for which they have been supplied. The intended use is given in the order specification and in the following instructions concerning the main pumping parameters and mechanical durability. If the intended use changes, the user must make sure that the pump can be used in the new application and, if necessary, obtain the manufacturer's permission for the change.

Table 1 Intended use in the process

Application data:	**Sources:**
Pumped liquid and its properties (chemicals, solids, consistency, temperature etc.)	Product specification (under "Process data")
Main pumping parameters (capacity, head, speed etc.)	Product specification (under "Process data") and nameplate of the pump
Other necessary process data	Product specification (under "Process data")

Table 2 Delivery and design

Delivery and design data:	**Sources:**
Delivery scopes (pump, coupling, baseplate etc.)	Product specification
Product size	Product specification and nameplate of the pump
Other design alternatives (impeller type and size, materials, lubrication, flange drillings, shaft sealing type etc.)	Product specification
Dimensions (pump, accessories, flanges etc.)	Dimensional drawings
Weights and mass moments of inertia (bare pump, pump + baseplate etc.)	Dimensional drawings
Connections (lubrication, shaft seal, drainage etc.)	Location shown in the parts list under heading "Connections" and in the sectional drawings. Moreover, connections having importance in view of safety have been marked on the product.
Part details (maximum impeller diameter, bearing types, fastener sizes etc.)	Parts list (under heading "Parts")

This instruction set covers the ANSI process pump with the supplementary accessories included in the delivery. All supplied instructions are found in the parts list under the heading "Instructions".

Before commissioning, the operating staff have to be instructed in the guidelines for correct and safe operation of the product as stated in these instructions. This product must be serviced by qualified personnel who are familiar with the design and operation of this product and the system with the essential safety aspects involved. The scope of responsibilities and supervision of the personnel must be exactly defined by the plant operator.

Our guarantee will be valid only if the installation, operation, maintenance and repairs of this pump are carried out in accordance with these instructions. The plant operator is to make sure that the contents of these instructions are fully understood by the operating personnel.

To assure a steady start-up, supervision or service from an authorized manufacturer representative is recommended. During operation, periodic inspections should be made to assure safe operation under the prevailing conditions.

Any modification may be made to the product only after consultation with the manufacturer. Using spare parts and accessories authorized by the manufacturer is a relevant safety aspect. Only genuine spare parts which are in accordance with the original delivery (in the parts list) are to be used. Use of other parts may exempt Sulzer from any liability.

COPYRIGHT © SULZER PUMPS FINLAND OY

If any assistance regarding the product or its instructions is required, please contact our local representative for a quick supply of the information you need.

The enclosed instructions regarding a possible long-term storage (more than 3 months) must be observed.

All customer instructions regarding this product are also available in an electronic format for viewing and printing (depending on the end user's software & hardware). If electronic format is needed, please contact our local representative for further information.

If the delivery includes customer instructions or other information in an electronic format which can be edited, we are only responsible for the contents of paper versions of these instructions and other information supplied by us.

Keep these instructions at the place of operation for further reference!

2 Document identification

Version 02 > / 20000331 / Replaces 941201 / en / **N10991** / Page 1 (2)

- Page 1 (2): Page number and total number of pages in the document
- **N10991**: Indentification number of document
- en: Language code of document
- Replaces 941201: Previous date for document
- 20000331: Date when the document in question was made or updated
- Version 02 >: Product version number

3 Type designation

C P T 2 3 - 2

- **2**: Nominal diameter of the discharge (inch) = 2 in
  Except the markings:
  1C and 1BC showing other hydraulic performance with same basic casing dimensions.
- **3**: Casing cover (part No. 161) serial number by bearing unit the third casing cover in the bearing unit No. 2
- **2**: Bearing unit No. = bearing unit No. 2
- **T**: Dimensioning = in-dimensioned structure
- **P**: Structure = standard process pump (horizontal)
- **C**: C = chemical process pump

COPYRIGHT © SULZER PUMPS FINLAND OY

COPYRIGHT © SULZER PUMPS FINLAND OY

4 Nameplate information

Every pump has the following plates fastened to the volute casing (102.01) providing necessary identification of the pump and its hydraulic characteristics.

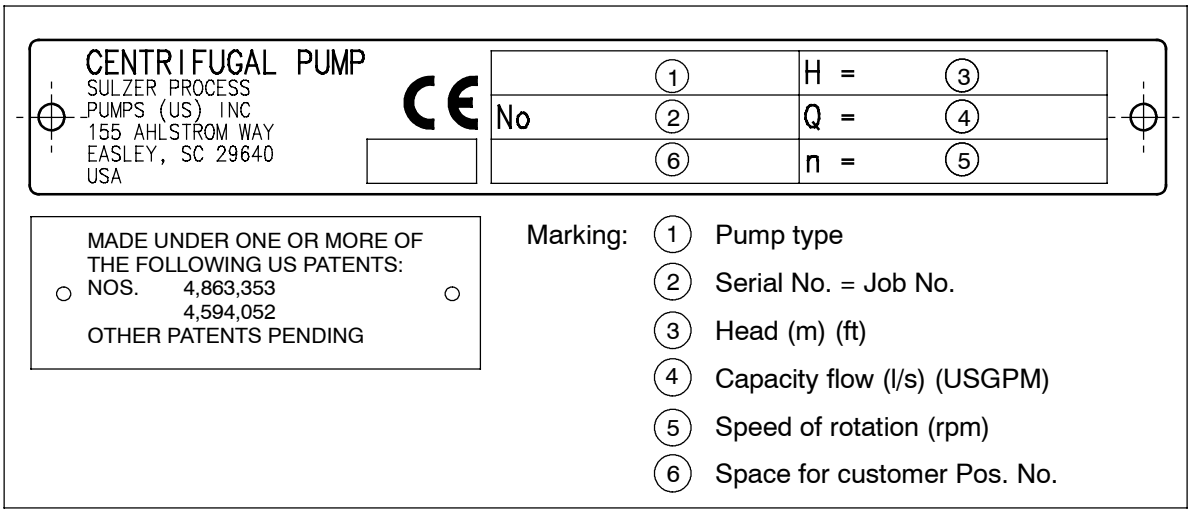

Fig. 1

5 Capacity and head

The pump is always dimensioned according to the pumping values (head, flow) stated in the nameplate (971.01) of the pump. Head and flow values that can be reached with the specific impeller diameter and operating speed are given in the characteristic curve of the pump. The operating point on the curve can be changed by adjusting the pumping system resistance e.g. by throttling the flow with the valve in the pressure piping. If the impeller diameter or the rotational speed of the pump are changed, then the operating point will move totally to another head-flow curve.

The pump must not be used at other operating points without the following verifications:

- When the pump was selected in the original operating point, all factors affecting the mechanical durability (e.g pressure and temperature limits) and pump design (pump, impeller type, shaft sealing and lubrication etc.) were carefully considered. All these factors are to be checked also in the new operating point.
- The pump could temporarily operate even with the pressure valve closed. For continuous operation, a minimum flow is still required. The required suction head (NPSH required) curve presented in the characteristic curve always starts from the point of the minimum continuous flow allowed.
- The suction properties of the system (NPSH available) and drive motor power are always to be checked in a new operating point.
- The efficiency of a pump is a relevant factor when estimating the lifetime costs of the pump. Therefore its influence on the power need must be checked.

COPYRIGHT © SULZER PUMPS FINLAND OY

- The characteristic curve enclosed is always based on tests with clean water. Other types of pumped liquid can change the head, flow or power need values radically. These factors were recognized when the pump was originally selected and they must be considered also in the new operating point.

COPYRIGHT © SULZER PUMPS FINLAND OY

SULZER

Pumps and Mixers

Safety of Machinery

SPP id: 100430 / en / **N31142** / 1

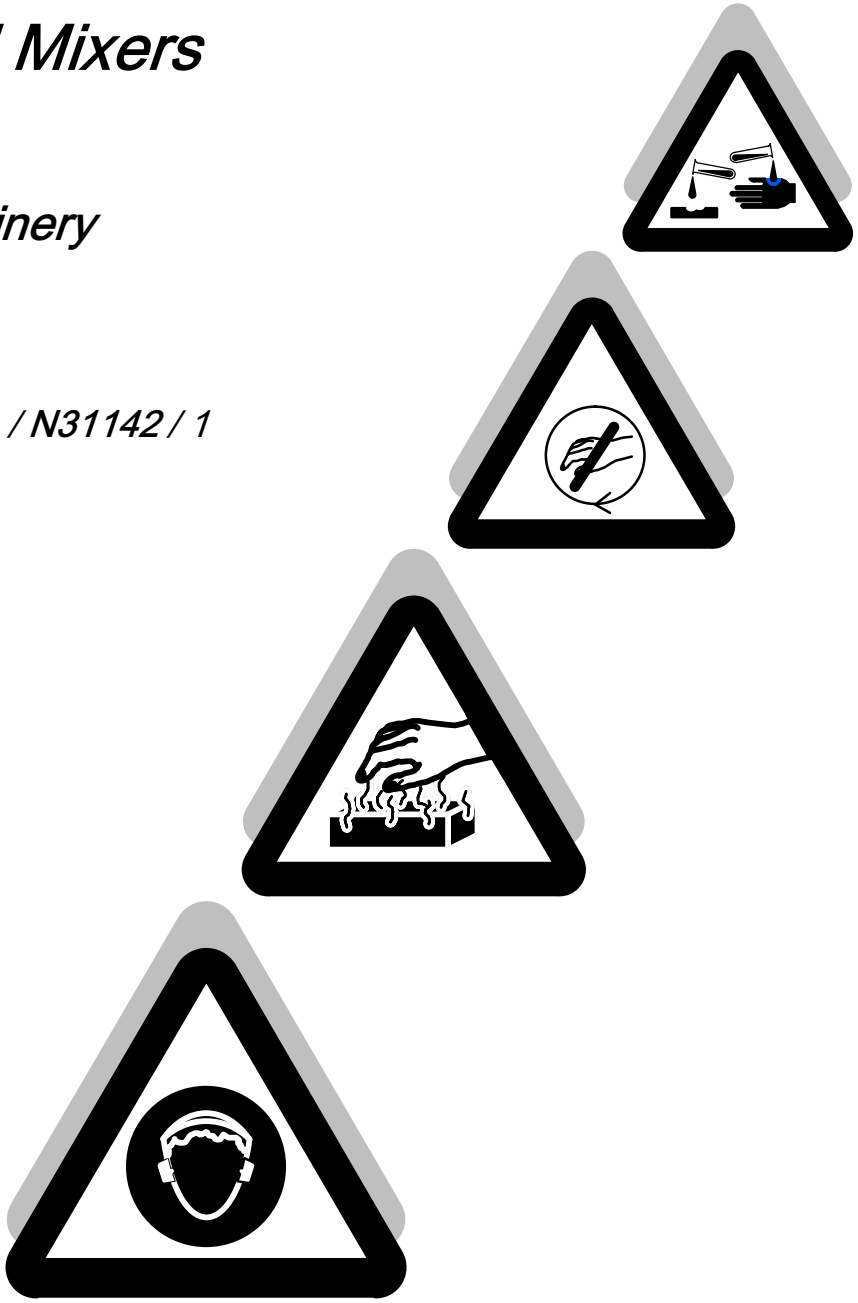

COPYRIGHT © SULZER PUMPS FINLAND OY

COPYRIGHT © SULZER PUMPS FINLAND OY

Table of contents

Page

0 General 3

1 Essential health and safety requirements 3

1.1 General remarks 3

1.1.1 Definitions 3

1.1.2 Principles of safety integration 3

1.1.3 Materials and products 3

1.1.4 Lighting 3

1.1.5 Design of machinery to facilitate its handling 4

1.2 Controls 4

1.2.1-8 Control and stopping devices 4

1.3 Protection against mechanical hazards 4

1.3.1 Stability 4

1.3.2 Risk of break-up during operation 4

1.3.3 Risks due to falling or ejected objects 4

1.3.4 Risks due to sharp edges or angles 4

1.3.6 Risks related to variations in the rotational speed 5

1.3.7 Prevention of risks related to moving parts 5

1.5 Protection against other hazards 5

1.5.1 Electricity supply 5

1.5.2 Static electricity 5

1.5.4 Errors of fitting 5

1.5.5 Extreme temperatures 5

1.5.6-7 Fire and explosion 5

1.5.8-9 Noise and vibration 6

1.5.10 Radiation 6

1.5.13 Emissions 6

1.5.15 Slipping, stumbling and falling 6

COPYRIGHT © SULZER PUMPS FINLAND OY

1.6 Maintenance *6*
1.6.1 Machinery maintenance *6*
1.6.2 Access to operating position and servicing points *7*
1.6.3 Isolation of energy sources *7*
1.6.4 Operator intervention *7*
1.6.5 Cleaning of (internal) parts of machine *7*
1.7 Indicators *7*
1.7.0-1 Information and warning devices *7*
1.7.2 Warning of residual risks *7*
1.7.3-4 Marking and instructions *7*

COPYRIGHT © SULZER PUMPS FINLAND OY

0 General

Our delivery does not include the design of the operating environment of the machine, nor the power circuits, control circuits and controls for the machine required in the operation of the machine. However, the European Machinery Directive 2006/42/EC on safety of machines and/or corresponding national legislation of the country where the machine is used are mandatory in terms of essential health and safety requirements related to the operation of the process.

We require that the Customer has taken into account the essential requirements laid down in this instruction when designing, purchasing and starting up the process control systems, other controls and equipment related to the machine. Some of these requirements also concern the personnel in charge of the operation of the machine.

As far as the above is applicable, the Customer must also ensure that the valid legislation on electrical safety (such as low-voltage directive) or electromagnetic compatibility of equipment (EMC directive) is followed.

During the operation of the machine, valid occupational safety legislation of the country where the machine is used must also be followed.

1 Essential health and safety requirements

1.1 General remarks

1.1.1 Definitions

When necessary, the potential danger zones related to the machine and its operating environment, persons exposed within the danger zone and all operator groups of the machine must be specified jointly between the Customer and the Manufacturer, for example for the purpose of introductory training arranged for the operators of the machine.

1.1.2 Principles of safety integration

As a machine manufacturer, we have, in accordance with the contents of the delivery, followed the Machinery Directive and/or the national legislation of the country where the machine is used in order to ensure safety integration.

The installation, operating and safety instructions supplied with the machine must be followed on receipt of the machine, in installing it at the point of operation and in its operation. Prior to final start-up, it must be ensured that the machine, its controls and other equipment related to a safe use of the machine fulfil the requirements laid down in the Machinery Directive and/or in national safety legislation.

1.1.3 Materials and products

The products related to the use of the machine (liquids transferred in the process) must not endanger the exposed persons' safety or health. The process where the machine is used must be designed so that the use of liquids causes no hazard.

1.1.4 Lighting

Maintenance areas necessary for the regular inspections of the machine must be provided with appropriate lighting.

COPYRIGHT © SULZER PUMPS FINLAND OY

1.1.5 Design of machinery to facilitate its handling

The environment of the machine must be designed so that, in order to facilitate the handling of the machine or its various components, standard lifting gear can be attached above the machine if necessary. The environment must be designed so that the various components can be handled safely in other respects as well. The handling and lifting instructions supplied with the machine must be absolutely followed.

1.2 Controls

1.2.1-8 Control and stopping devices

The controls of the machine must be safe and constructed in a way that will prevent a dangerous situation arising.

When designing the controls, the specified requirements laid down in the Machinery Directive and/or in the national legislation of the country where the machine is used must be absolutely followed in terms of controls, starting devices, stopping devices (including emergency stop devices) and selection of control and operating modes for the machine and combinations of machinery.

The controls of the machinery must be designed so that fluctuations in energy supply or failures in the control circuit do not lead to dangerous situations. The interactive software used in the controls between the operator and the machine must be user-friendly.

1.3 Protection against mechanical hazards

1.3.1 Stability

Our delivery includes the appropriate accessories for securing the machine to the foundations. The installation instructions supplied with the machine must be absolutely followed in order to ensure sufficient stability of the machine/combination of machinery.

1.3.2 Risk of break-up during operation

The piping and hoses connected to the machine must be able to withstand the anticipated internal and externals stresses, and they must be firmly secured and protected against all manner of loading and stress.

The instructions concerning the purpose of the machine, limitations of use, allowable flange forces and support of piping, supplied with the machine, must be absolutely followed. During operation, there is always a risk of rupture in the piping connected to the machine (risk of high-pressure/hot/harmful liquid spray) if the supplied instructions are violated.

1.3.3 Risks due to falling or ejected objects

Necessary precautions must be taken to prevent risks from falling or ejected objects (e.g. tools used during installation).

1.3.4 Risks due to sharp edges or angles

Due to the purpose and design of the machine, its parts have sharp edges and/or angles. During installation and maintenance, the instructions supplied with the machine must be followed, and the appropriate personal protective equipment must be used.

COPYRIGHT © SULZER PUMPS FINLAND OY

1.3.6 Risks related to variations in the rotational speed

The instructions supplied with the machine show the intended rotational speed of the machine and its maximum rotational speed limits. Selection and adjustment of rotational speed must be performed so that these instructions are adhered to.

1.3.7 Prevention of risks related to moving parts

The fixed guards used for preventing risks related to moving parts in the machine must be absolutely kept in place while the machine is running. If a guard is not included in the delivery, it must be ensured prior to start-up that the rotating parts are provided with guards in accordance with the valid legislation. If rotating parts of the machine seize accidentally during operation, the machine must be stopped immediately and the cause of the fault must be ascertained in accordance with the instructions supplied with the machine.

1.5 Protection against other hazards

1.5.1 Electricity supply

The electrical drives of the machine must be designed, constructed and equipped so that all hazards of an electrical nature can be prevented. The specific rules and valid legislation in force related to electrical equipment must be absolutely followed.

1.5.2 Static electricity

The build-up of potentially dangerous electrostatic charges in the machine and its auxiliary equipment must be prevented or restricted.

1.5.4 Errors of fitting

Errors made when fitting parts of the machine can be a source of risk. For this reason, the instructions supplied with the machine must be absolutely followed during the installation and repairs of the machine.

Faulty liquid and electrical connections can also be a source of risk. With liquid connections, the instructions supplied with the machine must be followed. Faulty electrical connections must be made impossible by the design, or information on the risk must be given on cables and connectors.

1.5.5 Extreme temperatures

If necessary, the machine must be provided with warnings concerning high surface temperatures. In these cases, additional steps should be taken to eliminate any risk of injury caused by contact with or proximity to machinery parts. Maintenance requires the heating of some parts prior to installation. Carefulness is imperative during installation, and appropriate personal protective equipment must be used during installation.

1.5.6-7 Fire and explosion

Exact and detailed information on the process and the purpose for which the machine is used are essential in terms of safe operation of the machine. The specific circumstances prevailing at the point of use must always be checked between the Customer and Manufacturer when the machine is being selected.

COPYRIGHT © SULZER PUMPS FINLAND OY

1.5.8-9 Noise and vibration

The instructions supplied with the machine provide information on the emission of airborne noise and on the balancing of rotating parts of the machine. The data given must be taken into account and necessary steps must be taken in order to eliminate any risks caused by noise or vibration in accordance with the circumstances prevailing at the point of use.

1.5.10 Radiation

The instructions supplied with the machine provide information on the emission of radiation potentially involved in the measuring equipment of the machine. The operators of the machine must absolutely follow the safety instructions concerning the use of these equipment.

1.5.13 Emissions

The instructions supplied with the machine provide information on the control of leakages in the immediate proximity of the machine. If necessary, the following steps must be taken to eliminate harmful emissions involved in the process:

- account of the emissions and their potential consequences (e.g. possibility of fire, appropriate extinguishing equipment)
- preventing exposure of operators
- controlled containment and evacuation of emissions
- cleaning of emissions and machinery
- appropriate personal protective equipment and warnings

1.5.15 Slipping, stumbling and falling

When installing, servicing and repairing the machine, the instructions supplied with the machine, safety instructions applicable at the point of use and sufficient care and attention must be followed in order to prevent any slipping, stumbling or falling.

1.6 Maintenance

1.6.1 Machinery maintenance

The maintenance and repair instructions supplied with the machine must be absolutely followed. The instructions specify separately which measures require stopping and potential draining of the machine. Appropriate personal protective equipment as required by the work performed must always be used, e.g.:

- hearing protectors
- eye protectors
- breathing protectors
- safety gloves, safety footwear, protective clothing

When servicing and repairing the machine, principles of ergonomics (avoiding excessive use of muscular power, utilization of lifting gear, lifting positions, lighting of the area, cleanliness etc.) must also be taken into account.

COPYRIGHT © SULZER PUMPS FINLAND OY

1.6.2 Access to operating position and servicing points

Where the location design for the machine is not included in the delivery, steps must be taken to situate the machine at the point of operation in a manner that enables safe maintenance and repairs of the machine. Provision of sufficient maintenance space around the machine must be taken into account in the design of the operating environment.

1.6.3 Isolation of energy sources

The controls of the machine must be designed so that they include clearly identified devices that can be used to isolate the machine from all energy sources. These devices must be capable of being locked if reconnection of energy could endanger exposed persons. After the energy is cut off, it must be possible to dissipate any energy remaining or stored in the process (e.g. discharging pressure) without risk to exposed persons.

1.6.4 Operator intervention

The controls of the machine must be designed so that the need for operator intervention is limited.

1.6.5 Cleaning of (internal) parts of machine

The potential cleaning of the machine must take place in accordance with the instructions supplied with the machine and the safety instructions applicable at the point of use so that cleaning can be carried out as safely as possible.

1.7 Indicators

1.7.0-1 Information and warning devices

When designing the controls of the machine, the specified requirements laid down in the Machinery Directive and/or national legislation of the country where the machine is used must be absolutely followed in terms of information and warning devices used on the machine.

1.7.2 Warning of residual risks

The safety warnings related to the machine must be kept clean under all circumstances, and the warnings must be renewed when necessary. All operators of the machine must be warned of the residual risks involved in electricity or the controls in accordance with specified requirements laid down in the Machinery Directive and/or national legislation of the country where the machine is used.

1.7.3-4 Marking and instructions

The marking and instructions for the machine must be drawn up in accordance with the Machinery Directive and/or national legislation of the country where the machine is used. Steps must be taken to ensure that the marking and instructions for other equipment related to a safe use of this machine conform to valid legislation.

In particular, it must be ensured that the point of use is provided with instructions for emergencies, such as:

- how to give alarm
- location of rescue and fire extinguishing equipment
- availability of first aid and necessary first aid equipment

COPYRIGHT © SULZER PUMPS FINLAND OY

SULZER

Safety instructions

Version 02 > / 20100520 / Replaces 20100430 / en / **N15062**

Contest *Page*

1 General 1

2 Definitions 2

3 Essential safety aspects 3

4 Safety signs affixed to the product 4

4.1 Safety signs on the product 4

5 Operating situations affecting product safety . . 6

6 Admissible forces and moments on pump. 6
flanges

6.1 Allowance nozzle loads 6

7 Sound level charts (open impellers) 9

8 Balance and vibration 10

9 Maximum size of solid particles 11

COPYRIGHT © SULZER PUMPS FINLAND OY

COPYRIGHT © SULZER PUMPS FINLAND OY

1 General

This product is designed and tested for safe and reliable operation in the application for which it is specified and sold. Remember, a pump is a piece of equipment with pressure containing parts and rotating elements which can cause a hazard. Therefore, all the safety measures in the instructions are to be followed strictly. Personal injuries may result if the instructions are not observed and followed.

It is not only the general safety instructions contained under this main heading ”Safety instructions” which are to be observed, but also the specific safety information presented in other instructions relating to this delivery, relevant national safety regulations or any other safety information issued by the plant operator.

The exact and detailed process and application data is relevant for the safe and reliable operation of the product. Special environmental conditions at the place of installation should always be checked between the end user and manufacturer. Such conditions are e.g.

- Abnormal temperature
- High humidity
- Corrosive atmospheres
- Pressure fluctuations
- Falling below the minimum permissible flow, dry running
- Explosive and/or fire risk zones
- Dust, sandstorms
- Earthquakes

Special safety measures are also needed when the type of liquid to be pumped is e.g. the following:

- Flammable
- Corrosive, abrasive
- Poisonous
- Crystallizing
- Solid containing
- Gas containing

Non-compliance with the safety and specific operating instructions may produce a risk to the personnel as well as to the environment, e.g.

- Failure of important functions of the pump and/or plant
- Failure of specific procedures of maintenance and repair
- Exposure of people to electrical, mechanical and chemical hazards
- Endangering the environment owing to hazardous substances being released

COPYRIGHT © SULZER PUMPS FINLAND OY

2 Definitions

The following words are used in the instructions to indicate issues which require special attention.

W A R N I N G
There is a risk of personal injury if the instruction is not adhered to.

C A U T I O N
There is a risk of damaging or destroying the product or equipment if the instruction is not adhered to.

N O T E
Is used in the text for highlighting necessary information or requirements which are essential to observe.

COPYRIGHT © SULZER PUMPS FINLAND OY

3 Essential safety aspects

All of the following relevant safety aspects are to be instructed to the operators and maintenance personnel before putting the product into service.

- The product is meant only for the purpose for which it is sold – never operate beyond the intended use described in these instructions.
- Always stop the drive unit before beginning any repair work on the pump. Make sure that the motor cannot be started by any means accidentally during the repairs.
- For delivery, the bearing housing of the pump has been emptied of oil. Remember to refill it before starting.
- Personal injuries may occur if personal protective equipment is not used when servicing the product.
- The product must always be equipped with a shaft sealing system compatible with the pumped liquid.
- Pump units which convey hazardous media must be decontaminated before beginning any maintenance work.
- If there is a possibility that the pump or the pipeline contains explosive gases or vapours, it must be ventilated carefully before working on the pump.
- If there is a possibility that there are explosive gases or vapours in the atmosphere surrounding the pump, the pump's environment be ventilated carefully before working on the pump.
- External heat must not be used when dismantling the pump, as any liquid, gas, vapour or their combination that remains in the pump may explode.
- If there is a possibility of a dangerous return flow after the shutdown of the pump, a nonreturn device shall be assembled in the outlet piping.
- All safety devices (e.g coupling guards) must be correctly installed before starting. For explosive areas, guards with a non-sparking material are to be used.
- The correct rotating direction of the drive unit must be checked before starting and the pump must rotate freely (with coupling spacer removed).
- The coupling must be properly aligned before starting.
- The pump must be sufficiently filled with the pumped liquid before starting.
- The pump must run above the minimum recommended flow and never dry.
- The suction valve must be open during operation.
- If leakage of harmful or dangerous substances can occur – prepare proper means for a safe waste removal.
- There is no protection against contact in the shaft seal area.
- The parts in contact with the pumped liquid can be dangerously hot.

COPYRIGHT © SULZER PUMPS FINLAND OY

4 Safety signs affixed to the product

The following warnings and informative signs concerning the essential safety aspects are permanently fixed on the product. Safety signs must always be observed and kept clean and legible in any operating condition. The user must always check that the symbols or items presented in those are understood by all user groups before putting the product into service.

4.1 Safety signs on the product

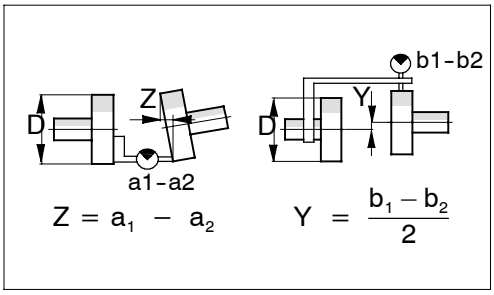

Item no. 976.02 Coupling alignment values.

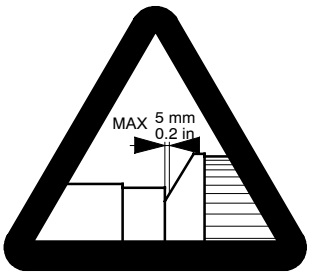

Item no. 975.04 Coupling guard jacket to be adjusted during assembly.

Item no. 975.03. Dangerous substances.

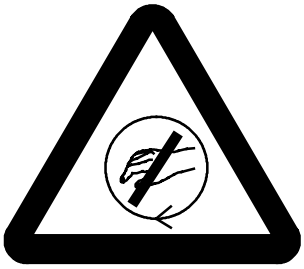

Item no. 975.02. Rotating shaft, do not touch when in operation.

COPYRIGHT © SULZER PUMPS FINLAND OY

Item no. 975.01. Hot surface, do not touch (to be fixed when the temperature of the pumped liquid is > 60 °C (140 °F)).

FOR DELIVERY THE BEARING HOUSING OF THE PUMP HAS BEEN EMPTIED OF OIL. REMEMBER TO REFILL IT BEFORE STARTING!

Item no. 976.01. Lubrication oil will have to be added.

020

Item no. 020.01 Sealing liquid inlet (and other signs of connections found in the parts list under heading "Connections").

COPYRIGHT © SULZER PUMPS FINLAND OY

5 Operating situations affecting product safety

The following inadequate operating situations always have consequences which have an immediate effect on the product safety and therefore they are not allowed in any operating conditions with this product.

Table 1 Typical inadmissible operating situations

Cause:	Consequence:
Discharge valve not opened. Inlet pressure or piping system resistance incorrectly estimated when the pump was originally selected. The pump is operated at too high a rotational speed.	Inadmissible pressure increase
Discharge valve not opened. Discharge valve throttled too much. Properties of the pumped liquid incorrectly estimated when the pump was originally selected.	High temperatures (Hydraulic parts)
Gland packing tightened too much . Adequate sealing water service neglected. – Sealing water pump not started – Sealing water valve not opened – Sealing water equipment incorrectly adjusted – Quality of the sealing water does not match our requirements. Inlet pressure incorrectly estimated when the pump was originally selected. Pump is not properly filled with the pumped liquid. – Suction valve not opened – Suction tank not properly filled – Suction piping resistance or air tightness improperly checked.	High temperatures (Shaft sealing)
Pump lubrication carried out inadequately. – Oil/grease filling neglected – Oil/grease quality incorrectly selected – Relubrication carried out inadequately Pump washdown carried out inadequately (sprayed water enters the bearing unit). Properties of the pumped liquid incorrectly estimated when the pump was originally selected.	High temperatures (Bearing unit)

6 Admissible forces and moments on pump flanges

6.1 Allowance nozzle loads

Principles for allowed nozzle loads

Allowable flange loading imposed by the piping is in accordance with HI 9.6.2. In the following the method described in HI 9.6.2 is represented briefly. For additional information and equations to be used in calculations, see the standard.

Loads listed in the following tables 2 – 5 are applicable for pumps constructed of material 41 (ASTM A 890 3A) with either Class 150 or Class 300 flanges, operated between –20 °F and 100 °F (from –29 °C to 38 °C) and mounted on a fully grouted metal baseplate with anchor bolts. For other situations, see adjustment factors below.

COPYRIGHT © SULZER PUMPS FINLAND OY

Adjustment for temperature and material of construction

For pumps with other than material 41 (ASTM A 890 3A) and/or higher than 100 °F (38 °C) temperature, adjustment factors according to table 6 shall be used. Use adjustment factor to adjust values in table 3. If any of the adjusted values in table 3 becomes lower than the corresponding value in table 2, substitute the lower value into table 2.

Adjustment for ungrouted metal baseplate

Use 100% of the values in the table 3 and 80% of the values in tables 4 and 5. If any of the adjusted values in table 4 and 5 becomes lower than the corresponding value in table 2, substitute the lower value into table 2.

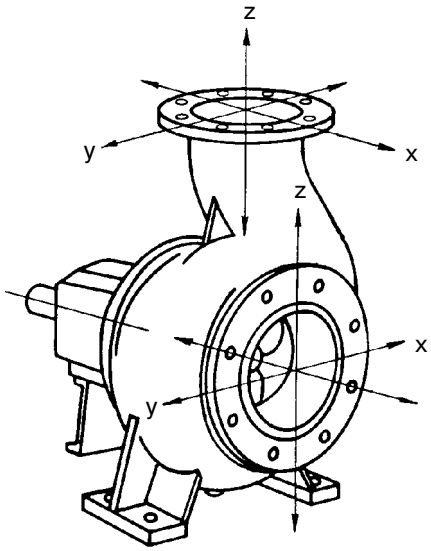

Fig. 8

Table 2 *Allowable individual nozzle loads. Horizontal end suction pumps in accordance with ASME B73.1.*

Pump size	Size marking	Suction						Discharge					
		Forces (lb)			Moments (ft-lb)			Forces (lb)			Moments (ft-lb)		
		F_{xs} max	F_{ys} max	F_{zs} max	M_{xs} max	M_{ys} max	M_{zs} max	F_{xd} max	F_{yd} max	F_{zd} max	M_{xd} max	M_{yd} max	M_{zd} max
11-1	1.5 x 1 x 6	1050	750	750	720	170	170	800	1350	3000	410	410	410
11-1B	3 x 1.5 x 6	1050	1240	1250	900	490	490	800	1350	3000	500	550	510
11-2	3 x 2 x 6	1050	1050	1050	900	220	220	800	1350	3000	500	1000	510
11-3	4 x 3 x 6	1050	1050	1050	900	220	220	800	1350	3000	500	1000	510
12-1	1.5 x 1 x 8	1050	1210	1210	720	190	190	800	1350	3000	360	360	360
12-1B	3 x 1.5 x 8	1050	1240	1250	900	490	490	800	1350	300	440	440	440
21-1B	3 x 1.5 x 8A	2700	1350	1500	1300	370	370	1400	1350	3250	460	460	460
21-2	3 x 2 x 8A	2700	1350	1500	1300	600	600	1400	1350	3250	660	660	660
21-3	4 x 3 x 8A	2700	1350	1500	1300	350	350	1400	1350	3250	1200	1460	690
21-4	6 x 4 x 8A	2700	1350	1500	1300	350	350	1400	1350	3250	1200	1460	690
22-1	2 x 1 x 10	2340	960	960	1270	220	220	1400	1350	3250	660	660	660
22-1C	2 x 1 x 10C	2340	960	960	1270	220	220	1400	1350	3250	660	660	660
22-1B	3 x 1.5 x 10	2700	1350	1500	1300	420	420	1400	1350	3250	370	370	370
22-2	3 x 2 x 10	2700	1350	1480	1300	310	310	1400	1350	3250	560	560	560
22-4	6 x 4 x 10	2700	1350	1500	1300	1100	1100	1400	1350	3250	1200	1500	690

COPYRIGHT © SULZER PUMPS FINLAND OY

COPYRIGHT © SULZER PUMPS FINLAND OY

Pump size	Size marking	Suction						Discharge					
		Forces (lb)			Moments (ft-lb)			Forces (lb)			Moments (ft-lb)		
		F_{xs} max	F_{ys} max	F_{zs} max	M_{xs} max	M_{ys} max	M_{zs} max	F_{xd} max	F_{yd} max	F_{zd} max	M_{xd} max	M_{yd} max	M_{zd} max
23-1B	3 x 1.5 x 11	2700	1350	1500	1300	420	420	1400	1350	3250	370	370	370
23-2	3 x 2 x 11	2700	1350	1480	1300	310	310	1400	1350	3250	560	560	560
23-3	4 x 3 x 11	2300	1350	1500	1300	310	310	1400	1350	3250	1200	1480	690
24-1B	3 x 1.5 x 13	2700	1350	1500	1300	670	670	1400	1350	3250	530	530	530
24-1BC	3 x 1.5 x 13C	2700	1350	1500	1300	670	670	1400	1350	3250	530	530	530
24-2	3 x 2 x 13	1920	1230	1230	1300	350	350	1400	1350	3250	1200	1270	690
24-3	4 x 3 x 13	2700	1350	1500	1300	400	400	1400	1350	3250	1200	1500	690
24-4	6 x 4 x 13	2700	1350	1500	1300	1300	1100	1400	1350	3250	1200	1500	690
31-6	8 x 6 x 13	3500	3180	2000	1500	1170	1170	1500	3000	3500	1250	2840	2840
32-6	8 x 6 x 15	3500	3180	2000	1500	1480	1480	1500	3000	3500	1250	2840	2840
32-8C	10 x 8 x 15C	3500	3180	2000	1500	1130	1130	1500	3000	3500	1250	2840	2840
32-8	10 x 8 x 15	3500	3180	2000	1500	1130	1130	1500	3000	3500	1250	2840	2840
33-4	6 x 4 x 17	3500	2850	1800	1350	1055	1055	1350	2300	3150	1125	2555	2555
33-6	8 x 6 x 17	3500	3180	2000	1500	1480	1480	1500	3000	3500	1250	2840	2840
33-8	10 x 8 x 17	3500	3180	2000	1500	1130	1130	1500	3000	3500	1250	2840	2840

Table 3 ***Allowance combination nozzle loads for nozzle stress, hold-down bolt stress and pump slippage on baseplate. Horizontal end suction pumps in accordance with ASME B73.1.***

Pump size	Size marking	Suction						Discharge					
		Forces (lb)			Moments (ft-lb)			Forces (lb)			Moments (ft-lb)		
		F_{xs} max	F_{ys} max	F_{zs} max	M_{xs} max	M_{ys} max	M_{zs} max	F_{xd} max	F_{yd} max	F_{zd} max	M_{xd} max	M_{yd} max	M_{zd} max
11-1	1.5 x 1 x 6	2020	750	750	1830	170	170	2020	1350	6240	410	410	410
11-1B	3 x 1.5 x 6	2020	1240	2110	2290	490	490	2020	1350	6240	550	550	510
11-2	3 x 2 x 6	2020	1050	1050	2290	220	220	2020	1350	6240	1030	1030	510
11-3	4 x 3 x 6	2020	1050	1050	2290	220	220	2020	1350	6240	1030	1030	510
12-1	1.5 x 1 x 8	2020	1210	1210	1830	190	190	2020	1350	6240	360	360	360
12-1B	3 x 1.5 x 8	2020	1240	1640	2290	490	490	2020	1350	6240	440	440	440
21-1B	3 x 1.5 x 8A	2700	1350	1820	3730	370	370	2020	1350	6240	460	460	460
21-2	3 x 2 x 8A	2700	1350	2490	3730	600	600	1970	1350	6240	660	660	660
21-3	4 x 3 x 8A	2700	1350	1840	3730	350	350	2020	1350	6240	1460	1460	690
21-4	6 x 4 x 8A	2700	1350	1840	3730	350	350	2020	1350	6240	1460	1460	690
22-1	2 x 1 x 10	2340	960	960	3640	220	220	2020	1350	6240	660	660	660
22-1C	2 x 1 x 10C	2340	960	960	3640	220	220	2020	1350	6240	660	660	660
22-1B	3 x 1.5 x 10	2700	1350	1910	3730	420	420	1940	1350	6240	370	370	370
22-2	3 x 2 x 10	2700	1350	1480	3730	310	310	2020	1350	6240	560	560	560
22-4	6 x 4 x 10	2700	1350	6240	3730	1100	1100	2020	1350	6240	3100	3100	690
23-1B	3 x 1.5 x 11	2700	1350	1910	3730	420	420	1940	1350	6240	370	370	370
23-2	3 x 2 x 11	2700	1350	1480	3730	310	310	2020	1350	6240	560	560	560
23-3	4 x 3 x 11	2300	1350	1640	3730	310	310	2020	1350	6240	1460	1460	690
24-1B	3 x 1.5 x 13	2700	1350	3060	3730	670	670	2020	1350	6240	530	530	530
24-1BC	3 x 1.5 x 13C	2700	1350	3060	3730	670	670	2020	1350	6240	530	530	530
24-2	3 x 2 x 13	1920	1230	1230	3730	350	350	2020	1350	6240	1460	1460	690
24-3	4 x 3 x 13	2700	1350	2390	3730	400	400	2020	1350	6240	1730	1730	690
24-4	6 x 4 x 13	2700	1350	6240	3730	4980	1100	2020	1350	6240	2150	2150	690
31-6	8 x 6 x 13	6360	3180	5080	8970	1170	1170	6360	3180	13460	6780	3850	2840

COPYRIGHT © SULZER PUMPS FINLAND OY

Pump size	Size marking	Suction						Discharge					
		Forces (lb)			Moments (ft-lb)			Forces (lb)			Moments (ft-lb)		
		F_{xs} max	F_{ys} max	F_{zs} max	M_{xs} max	M_{ys} max	M_{zs} max	F_{xd} max	F_{yd} max	F_{zd} max	M_{xd} max	M_{yd} max	M_{zd} max
32-6	8 x 6 x 15	6360	3180	6680	8970	1480	1480	6360	3180	13460	6560	3720	2840
32-8C	10 x 8 x 15C	6360	3180	5130	8970	1130	1130	6360	3180	13460	8970	9060	2840
32-8	10 x 8 x 15	6360	3180	5130	8970	1130	1130	6360	3180	13460	8970	9060	2840
33-4	6 x 4 x 17	6360	3180	4570	8970	1055	1055	5725	2860	12115	6100	3465	2555
33-6	8 x 6 x 17	6360	3180	6680	8970	1480	1480	6360	3180	13460	6560	3720	2840
33-8	10 x 8 x 17	6360	3180	5130	8970	1130	1130	6360	3180	13460	8970	9060	2840

Table 4 ***Allowance combination nozzle loads for y-axis movement. Horizontal end suction pumps in accordance with ASME B73.1.***

Bearing unit	Suction						Discharge					
	Forces (lb)			Moments (ft-lb)			Forces (lb)			Moments (ft-lb)		
	F_{xs} max	F_{ys} max	F_{zs} max	M_{xs} max	M_{ys} max	M_{zs} max	F_{xd} max	F_{yd} max	F_{zd} max	M_{xd} max	M_{yd} max	M_{zd} max
1		-2000		900	1200	1250		1500		-500	1500	1250
2		-3500		1300	1300	3000		2500		-1200	1500	3000
3		-5000		1500	2000	4000		3000		-1250	5000	4000

Table 5 ***Allowance combination nozzle loads for z-axis movement. Horizontal end suction pumps in accordance with ASME B73.1.***

Bearing unit	Suction						Discharge					
	Forces (lb)			Moments (ft-lb)			Forces (lb)			Moments (ft-lb)		
	F_{xs} max	F_{ys} max	F_{zs} max	M_{xs} max	M_{ys} max	M_{zs} max	F_{xd} max	F_{yd} max	F_{zd} max	M_{xd} max	M_{yd} max	M_{zd} max
1	1050		-1250	1500	1200	-2500	800	2000	-3000	-1500	1000	-2500
2	3500		-1500	1500	1300	-3500	1400	2500	-3250	-1500	2150	-3500
3	3500		-2000	1500	4100	-4000	1500	4000	-3500	-1500	5000	-4000

Table 6 ***ASME B73.1 metallic pump temperature and material adjustment values to be used on table 3 values. Use for both class 150 and class 300 flanges.***

Temperature °F	Material class (Material code)			
	B1 (41, 4E, 4L, 4T, 4U)	**B2** (4G, 4J)	**B3** (43)	**D1** (5H)
-20 ... 100	1.00	1.00	0.83	0.89
200	1.00	0.86	0.77	0.83
300	1.00	0.78	0.73	0.78
400	0.98	0.72	0.67	0.73
500	0.92	0.67	0.65	0.69

7 Sound level charts

Noise emission values are stated according to ISO 4871 and the essential requirements in the Machinery Directive 2006/42/EC.

The noise values are given in accordance with standard EN12639.

COPYRIGHT © SULZER PUMPS FINLAND OY

Sound power levels have been determined according to EN ISO 9614 Part II using sound intensity measurements.

It is not possible to measure all different pump applications. Therefore, some values have been determined by calculations based on measurements with similar pumps and Europump's Guide 001/30/E, Forecasting the Airborne Noise Emission of Centrifugal Pumps.

LpA = A-weighted sound pressure level, dB re 20 μPa, at the relevant working station.

LwA = A-weighted sound power level, dB re 1 pW, if A-weighted sound pressure level exceeds 85 dB.

Table 7 ***Sound pressure level LpA / open impellers (dB)***

Pump size	Pump rot. speed (rpm)						
	3600	**3000**	**1800**	**1500**	**1200**	**1000**	**900**
11-1	<70	<70	<70	<70	<70	<70	
11-1B	<70	<70	<70	<70	<70	<70	
11-2, 11-3	72	71	<70	<70	<70	<70	
12-1	<70	<70	<70	<70	<70	<70	
12-1B	<70	<70	<70	<70	<70	<70	
21-2, 21-1B	75	73	<70	<70	<70	<70	
21-3	77	75	<70	<70	<70	<70	
21-4	77	75	<70	<70	<70	<70	
22-1	73	72	<70	<70	<70	<70	
22-1B, 22-1C	74	73	<70	<70	<70	<70	<70
22-2	76	74	<70	<70	<70	<70	<70
22-4	79	76	<70	<70	<70	<70	<70
23-1B	75	74	<70	<70	<70	<70	<70
23-2	80	77	<70	<70	<70	<70	<70
23-3	81	78	<70	<70	<70	<70	<70
24-1B	76	74	<70	<70	<70	<70	<70
24-1BC	79	76	<70	<70	<70	<70	<70
24-2	80	77	<70	<70	<70	<70	<70
24-3			<70	<70	<70	<70	<70
24-4			73	72	<70	<70	<70
31-6			75	73	<70	<70	<70
32-6			74	72	<70	<70	<70
32-8			81	80	74	73	<70
32-8C			79	77	72	71	<70
33-4			81	79	76	74	72
33-6			83	81	78	76	74
33-8, open1				82	79	77	76
33-8, open2			83	81	77	75	74

Table 8 ***Sound pressure level LpA / low flow impellers (dB)***

Pump size	Pump rot. speed (rpm)						
	3600	**3000**	**1800**	**1500**	**1200**	**1000**	**900**
12-1	<70	<70	<70	<70	<70	<70	
22-1	73	72	<70	<70	<70	<70	
24-1B	76	74	<70	<70	<70	<70	<70

COPYRIGHT © SULZER PUMPS FINLAND OY

8 Balance and vibration

The pump is normally balanced in accordance with grade G 6.3 of ISO 1940. Vibration does not exceed the vibration severity limits given in Table 9 when measured at the manufacturer's test facilities. These values are measured radially at the bearing housing at rated speed and flow when operating without cavitation.

A pump equipped with a specially designed impeller may exceed the limits given in Table 9.

Table 9 Max. r.m.s values of vibration velocity

Speed of rotation	Shaft centerline height D			
	≤ 8.86 in	**≤ 225 mm**	**> 8.86 in**	**> 225 mm**
≤ 1800 rpm	0.11 in/s	2.8 mm/s	0.177 in/s	4.5 mm/s
> 1800 rpm	0.177 in/s	4.5 mm/s	0.28 in/s	7.1 mm/s

9 Maximum size of solid particles

The maximum sizes of solid spherical particles which can flow through the pump (casing/impeller) are presented in Table 10.

Table 10 Max. size of solid particles

Pump size	Impeller type			
	Open		**Low flow**	
	⌀ in	⌀ mm	⌀ in	⌀ mm
11-1	0.28	7	-	-
11-1B	0.39	10	-	-
11-2	0.43	11	-	-
11-3	0.37	9.5	-	-
12-1	0.31	7.8	0.31	8
12-1B	0.39	10	-	-
21-1B	0.39	10	-	-
21-2	0.43	11	-	-
21-3	0.59	15	-	-
21-4	0.59	15	-	-
22-1	0.39	10	0.31	9
22-1C	0.47	12	-	-
22-1B	0.47	12	-	-
22-2	0.71	18	-	-
22-4	0.87	22	-	-
23-1B	0.35	9	-	-
23-2	0.59	15	-	-
23-3	0.87	22	-	-
24-1B	0.31	8	0.39	10
24-1BC	0.39	10	-	-
24-2	0.55	14	-	-
24-3	0.63	16	-	-
24-4	0.98	25	-	-
31-6	1.18	30	-	-

COPYRIGHT © SULZER PUMPS FINLAND OY

Pump size	Impeller type			
	Open		**Low flow**	
	⌀ in	⌀ mm	⌀ in	⌀ mm
32-6	1.73	44	-	-
32-8C	1.97	50	-	-
32-8	1.22	31	-	-
33-4	0.98	25	-	-
33-6	1.26	32	-	-
33-8, open1	1.42	36	-	-
33-8, open2	1.22	31	-	-

COPYRIGHT © SULZER PUMPS FINLAND OY

SULZER

Hoisting and transportation

20010515 / en / **N15063**

Contents *Page*

1 Safety measures 1

2 Hoisting and transportation 2

COPYRIGHT © SULZER PUMPS FINLAND OY

COPYRIGHT © SULZER PUMPS FINLAND OY

1 Safety measures

WARNING

Hoisting and transportation instructions are to be strictly followed to avoid dropping of crates or individual assemblies.

The total gross and net weights of the delivery are always found in the packing list affixed to the product or packing.

Special attention is to be paid to the stability of

- pump + baseplate without motor
- exchange unit
- bearing unit
- bare impeller

The center of gravity of these items should always be checked before hoistings and transportation.

Personal protective equipment such as helmet, safety shoes and gloves are to be used.

All lifting accessories and removable components must be capable of withstanding the stresses to which they are subjected during transport, assembly and dismantling.

Lifting ropes used directly for lifting or supporting the pump or pump unit must not include any splicing other than at their ends. Textile ropes and slings must not include any knots, connections or splicing other than at the ends of the sling, except in the case of an endless sling.

Lifting accessories must bear the identification of the manufacturer, material and the maximum working load.

COPYRIGHT © SULZER PUMPS FINLAND OY

COPYRIGHT © SULZER PUMPS FINLAND OY

2 Hoisting and transportation

The lifting accessories must always be able to adequately support the hoisted assembly.

If suitable lifting equipment is not available, heavy assemblies must be transferred by using skids etc. on the ground level.

The crates or individual assemblies must never be dropped to the ground during transportation. Refer to Figures 1 – 4 for examples of proper lifting techniques.

The transportation crate is hoisted according to Fig. 1. Permissible lifting points are also marked on the crate.

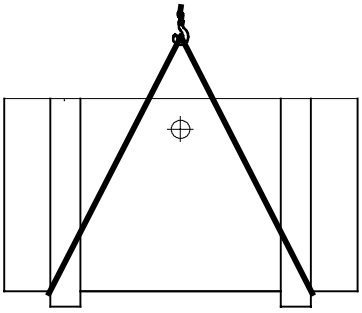

Fig. 1

The pump-motor-baseplate-assembly may be hoisted from under the pump suction flange and motor or under the baseplate. Fig. 2.

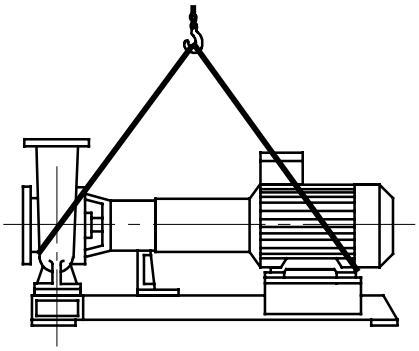

Fig. 2

COPYRIGHT © SULZER PUMPS FINLAND OY

COPYRIGHT © SULZER PUMPS FINLAND OY

The pump-baseplate-assembly is hoisted from under the pump suction flange and baseplate. Fig. 3.

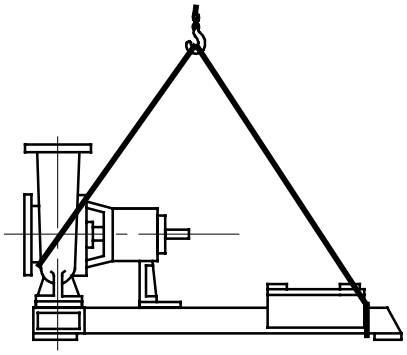

Fig. 3

The bare pump is hoisted from under the pump suction flange and bearing housing. Fig. 4.

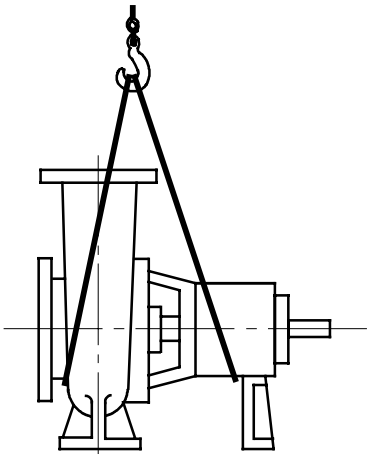

Fig. 4

COPYRIGHT © SULZER PUMPS FINLAND OY

Commissioning

20010515 / en / **N15064**

Contents *Page*

1 Purchase inspection 1

2 Storage 1

2.1 Short-term (less than 3 months) 1

2.2 Long-term 1

COPYRIGHT © SULZER PUMPS FINLAND OY

COPYRIGHT © SULZER PUMPS FINLAND OY

1 Purchase inspection

Check carefully that the delivery meets your order and is in accordance with the packing list and parts list of the pump. Inform the supplier immediately about any defects or damage observed.

Do not remove the cover plates or plugs protecting the openings before the installation of pipes. Foreign particles inside the pump may damage it at starting.

Examine the crate and wrapping before discarding them since parts and accessories are sometimes wrapped individually or fastened into the crate.

If the pump unit is not installed immediately, it should be stored under conditions that will prevent deterioration due to damage and/or corrosion. The long-term storage requirements should always be specified in the purchase order.

2 Storage

2.1 Short-term (less than 3 months)

When it is necessary to store a pump for a short term before the installation, it must be stored in a dry location where it cannot be affected by dirt or corrosion. Protection plates on the pump openings should not be removed.

The pump bearings and drive elements must be properly protected against any foreign matter.
To prevent rusting or seizing, lubricate the pump unit before storing and turn the pump shaft by hand at least once every two weeks.

2.2 Long-term

NOTE
The grease/oil lubricants must be changed before the pump is taken into use.

WARNING
The rust preventives must be cleaned off carefully before the pump is taken into use. Solvents containing rust preventives can cause irritation to the skin and/or the respiratory system. Prolonged physical contact and breathing of vapor are to be avoided.

COPYRIGHT © SULZER PUMPS FINLAND OY

COPYRIGHT © SULZER PUMPS FINLAND OY

If the pump or pump unit is stored for more than 3 months, the following procedures must be observed:

- Store the product in a dry place.
- Drain any liquid from the pump.
- Rotate the pump shaft by hand at least once every month to prevent bearing damage.
- With cast iron pumps equipped with gland packing, remove the gland packings (461) from the stuffing box and apply rust preventives in the stuffing box.
- With oil lubrication, the bearing unit is emptied of oil before the delivery. Fill the bearing unit with oil or coat the interior of the unit with a rust preventing film.
- Apply rust preventing agents to the unprotected parts, such as the shaft end, pump flanges and coupling. If necessary, protect the volute casing and shaft sealing with volatile corrosion inhibitors.
- Observe the storage instructions of any accessory equipment (e.g. electric motors) included in the delivery.
- If the pump unit is covered with a plastic sheet, the bottom should remain open to allow for ventilation.

COPYRIGHT © SULZER PUMPS FINLAND OY

SULZER

Installation

Version 03 > / 20020501 / en / **N15253**

Contents *Page*

1 *Safety procedures before installation* 1

2 *Fastener information* 1

3 *Installation at the site* 2

3.1 *Installation using welded foundation screws* 2

3.2 *Installation using grouted foundation screws* 3

4 *Installation of the motor on the baseplate* 4

5 *Foundation* 5

6 *Pipework* 5

6.1 *Supporting* 5

6.2 *Suction pipe below the pump* 6

6.3 *Suction pipe above the pump* 6

6.4 *Extension piece* 6

6.5 *Suction pipe design* 7

7 *Auxiliary piping* 8

7.1 *Sealing liquid pipings* 8

7.2 *Bearing unit pipings* 9

8 *Installation and alignment of coupling* 9

8.1 *Maximum tolerances for coupling alignment* 10

COPYRIGHT © SULZER PUMPS FINLAND OY

COPYRIGHT © SULZER PUMPS FINLAND OY

1 Safety procedures before installation

N O T E
A pump should have adequate space for proper installation and maintenance actions.

All parts for the installation must be thoroughly cleaned before the installation. All traces of antirust agents should be cleaned off from the pump flanges, shaft assembly and drive elements. Avoid any damage to installed parts when handling them.

Personal protective equipment such as helmet, safety glasses, safety shoes and gloves are to be used.

2 Fastener information

Table 1 shows the rated and maximum moments of torque for fasteners presented in these instructions. These shown values are only valid for fasteners where the moment values are not separately given.

Table 1 Fastener information

Screw size	Moments			
	Rating		**Max. value**	
	(lb ft)	(Nm)	(lb ft)	(Nm)
3/16	2.6	3.5	3.0	4.0
1/4	4.4	6.0	5.0	7.0
5/16	10.3	14	13.0	18
3/8	22.1	30	26.0	35
1/2	36.9	50	44.0	60
5/8	96	130	118.0	160
3/4	184.4	250	221.0	300
1	309.8	420	383.0	520
1 1/8	590.1	800	738.0	1000

COPYRIGHT © SULZER PUMPS FINLAND OY

3 Installation at the site

N O T E
When welding the foundation screws, connect the earth clamp to the baseplate, never to the pump!

The pump base must be sturdy enough to endure vibration, stress and potential forces caused by the piping.

The pump base is normally reinforced by making a concrete support stand or equivalent. Also note the bottom beams in the foundation or cavities for the different types of foundation screws.

3.1 Installation using welded foundation screws

The bottom beams in the foundation are cast in advance according to the dimensional drawing of the pump. The strength requirements for the bottom beams are given in Table 2. In order to facilitate the alignment of the beams, a so-called concrete frame can be used. The recommended accuracy for the installation of the beams is (± 0.4 in) ±10 mm in all directions. The actual installation becomes much easier, if the upper surfaces are horizontal.

Place foundation screws (918) in the fixing holes of the baseplate. The distance between the foundation and the lower edge of the baseplate must be at least (2 inches) 50 mm. Each foundation screw is fixed to the baseplate by means of hexagonal nuts (2 pcs/foundation screw). Fig.1.

Lower the pre-installed pump-motor-baseplate-assembly onto the floor so that the foundation screws are above the beams, and the pump is in its position in the lateral and longitudinal direction. Now the foundation screws can be welded to the beams.

Adjust the position of the baseplate before grouting by turning the hexagonal nuts of the foundation screws, until the assembly lies horizontally and at the correct height.

Table 2 ***Welded foundation screw***

Foundation screw	The capacity of the bottom beam (min.)				e.g. I-beam H x B x L	
	F_v tension		**F_h shear**		**min. dimensions**	
	(lbf)	(N)	(lbf)	(N)	(in)	(mm)
5/8-11 x 6	1900	8500	1700	7600	4 x 4 x 4	100 x 100 x 100
3/4-10 x 6	3900	17300	3250	14500	4 x 4 x 6	100 x 100 x 150

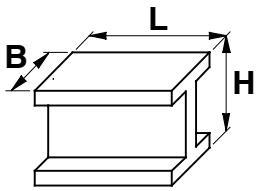

COPYRIGHT © SULZER PUMPS FINLAND OY

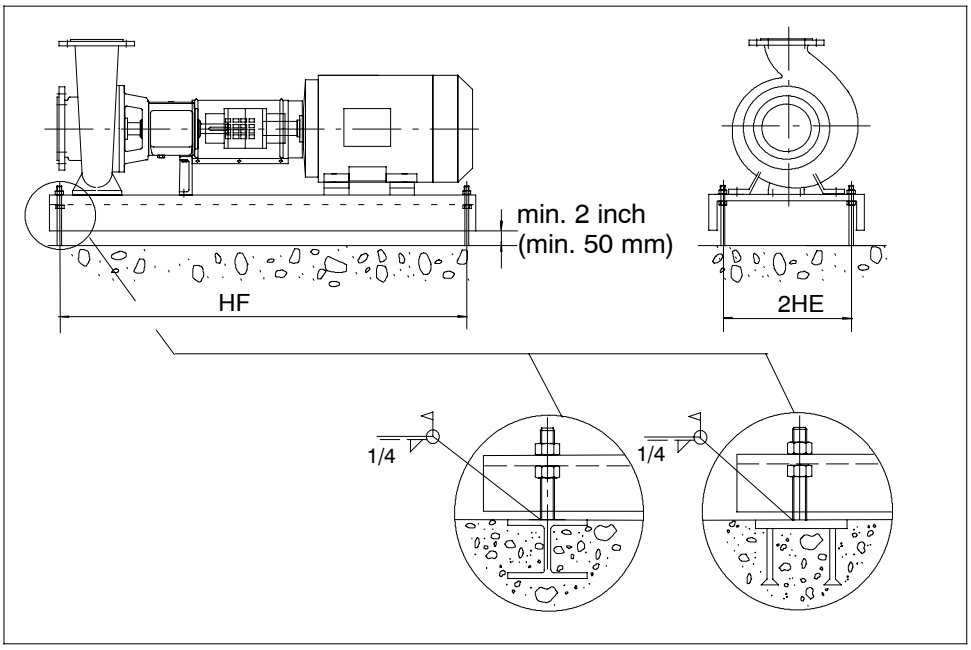

Fig. 1

3.2 Installation using grouted foundation screws

The foundation screw cavities are made in advance (by pouring of concrete, drilling) in the concrete frame according to the dimensional drawing of the pump, Table 3 and Fig. 2. The recommended accuracy for the location of the cavities is (0.4 in) ±10 mm.

Place the foundation screws (918) in the fixing holes of the baseplate, taking into account the distance between the foundation and the lower edge of the baseplate which must be at least (2 in) 50 mm and the minimum dimension U2 according to Table 3. Each foundation screw is fixed to the baseplate by means of hexagonal nuts (2 pcs/foundation screw).

Lift the pre-installed pump and baseplate onto the mounting blocks so that the distance between the foundation and the lower edge of the baseplate is at least (2 in) 50 mm and so that the foundation screws fit into their cavities and the pump is in its position in the lateral and longitudinal directions.

Grout the foundation screws. Use only non-shrinking solder concrete of high quality. Allow the concrete to set for about 1 or 2 days.

Remove the mounting blocks and adjust the position of the baseplate before grouting by turning the hexagonal nuts until the assembly lies horizontally and at the correct height.

Table 3 ***Grouted foundation screws***

Foundation screw						
Size	**~e**		**U_{min}**		**$U2_{min}$**	
	(in)	(mm)	(in)	(mm)	(in)	(mm)
5/8-11 x 11	4	100	8	200	6.25	160
3/4-10 x 14	5	125	10	250	8	200

COPYRIGHT © SULZER PUMPS FINLAND OY

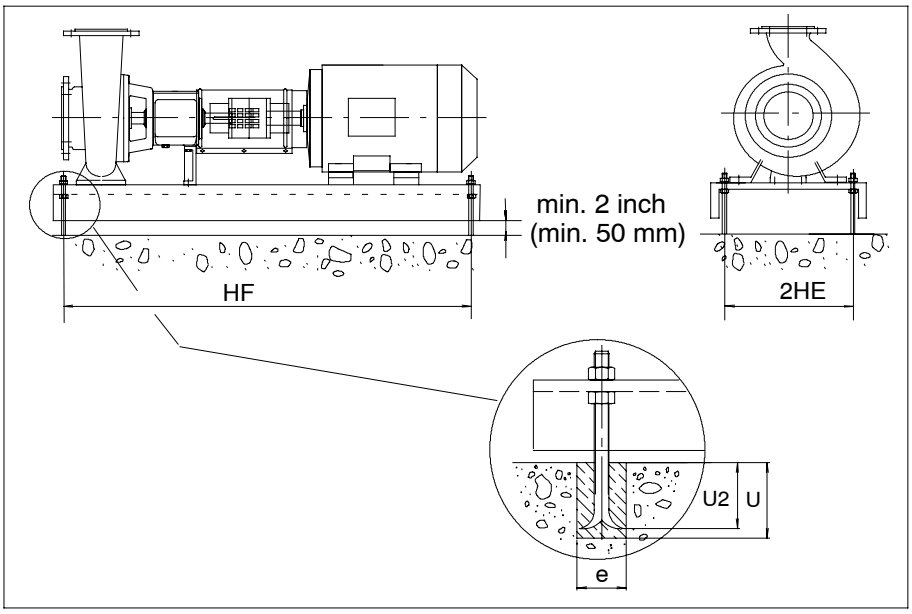

Fig. 2

4 Installation of the motor on the baseplate

WARNING

Personal injuries may occur if personal protective equipment are not used when servicing the product. When pumping hazardous liquids, skin and eye protection are required.

If the motor has not been installed on the baseplate by the pump manufacturer, the installation should be carried out as follows:

The coupling half on the motor side is warmed up to approx. (212 °F) 100 °C and pushed onto the motor shaft in such a way that the space between the ends of the shafts is according to the dimensional drawing (usually the front face of the coupling is even with the end of the shaft).

When installing the coupling, also see instructions supplied by the coupling manufacturer.

The coupling spacer is fastened to the coupling half of the motor without the flexible element.

Check that the pump is aligned as accurately as possible to the middle of the fixing holes of the motor. Lift the motor onto the riser blocks on the baseplate.

The coupling is aligned according to Section ”Installation and alignment of couplings”. The alignment is carried out by moving the motor vertically by means of the riser blocks or shims which are placed under the feet of the motor and laterally by moving the motor and the riser blocks sideways.

When installing the motor, special attention should be paid to the clearance of the coupling spacer, so that the spacer can be removed without detaching the motor.

COPYRIGHT © SULZER PUMPS FINLAND OY

COPYRIGHT © SULZER PUMPS FINLAND OY

5 Foundation

The recommended dimensioning for the foundation is given in Fig. 3. The dimensions for baseplate are given in the dimensional drawing, baseplate for pump and motor.

Pour concrete into the mold. The recommended strength grade for the concrete is about (2900 psi) 20 MPa (design strength K 20). The motor stand should be filled with concrete.

The upper surface of the foundation is levelled so that it is slanting in accordance with Fig. 3. Water the grouting during its drying to prevent cracking.

Recheck the alignment of the coupling after the grouting according to section ”Installation and alignment of coupling”.

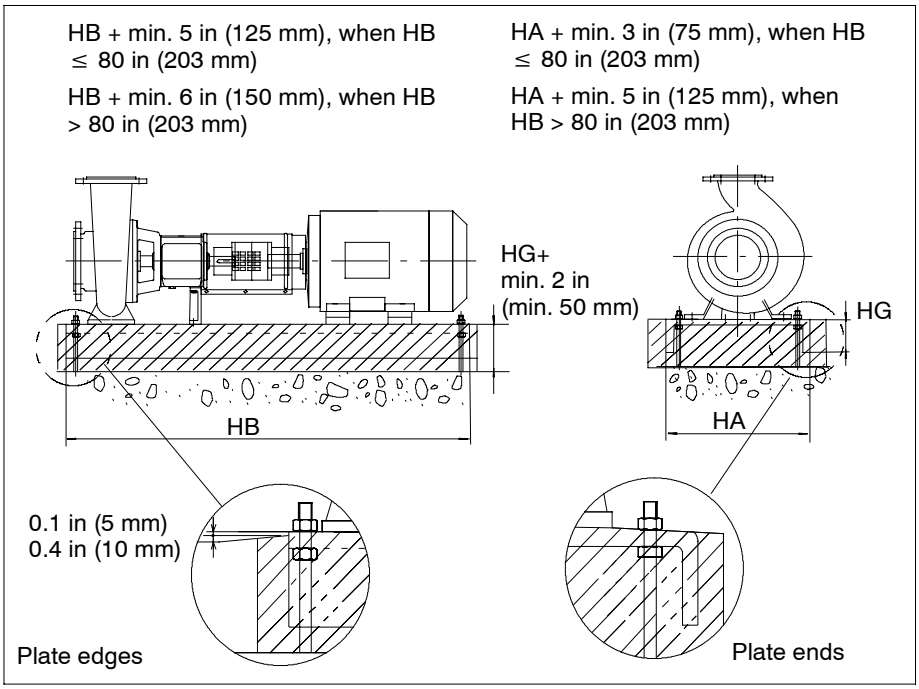

Fig. 3

6 Pipework

6.1 Supporting

The pipes must be installed and supported so that the forces, vibration and weight of the piping are not directed to the pump. When planning the support locations remember the allowance for thermal expansion. Fig. 4.

Fit the pipe flanges accurately to the pump flanges. Flanges which have not been properly aligned must not be forced to position.

COPYRIGHT © SULZER PUMPS FINLAND OY

COPYRIGHT © SULZER PUMPS FINLAND OY

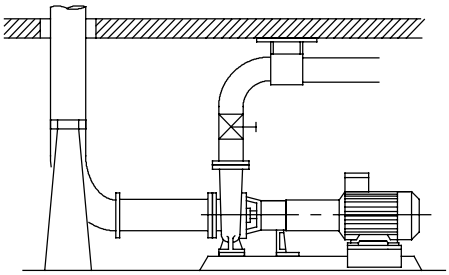

Fig. 4

6.2 Suction pipe below the pump

The suction pipe must be made as short as possible. Avoid points where air pockets or turbulence may be formed.

If the liquid level is below the pump, the suction pipe must gradually rise towards the pump. A sufficient length of the pipe end must be under the liquid level so that air cannot enter the pump. Fig. 5.

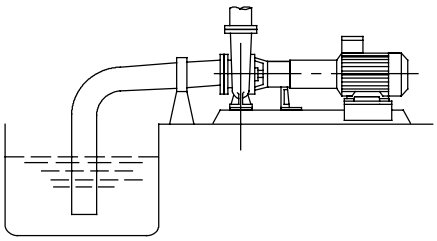

Fig. 5

6.3 Suction pipe above the pump

The suction pipe must descend gradually towards the pump. Fig. 6.

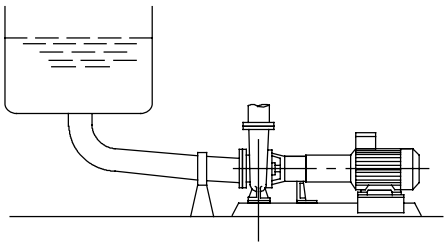

Fig. 6

6.4 Extension piece

The cones must be eccentric and in such a position that the upper level will be horizontal, in Fig. 7. If extension pieces are used, they must be formed so that gathering of gases cannot occur.

COPYRIGHT © SULZER PUMPS FINLAND OY

COPYRIGHT © SULZER PUMPS FINLAND OY

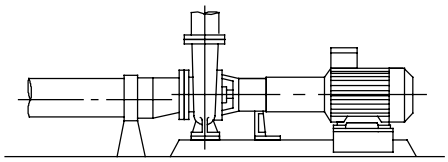

Fig. 7

6.5 Suction pipe design

WARNING

If there is a possibility of a dangerous return flow after the shutdown of the pump, a nonreturn device shall be installed in the outlet piping.

CAUTION

Never use the pump as a support for the piping system.

If the suction pipe has branches, they must be located as far from the pump as possible, and they must be formed advantageously with regard to the flow. The suction pipe must always be made as short as possible. Fig. 8.

A shut-off valve must be placed in the discharge pipe after the potential check valve. Before commissioning, clean the piping and suction pit carefully. Tools or other things left inside the pump will damage the pump already at testing.

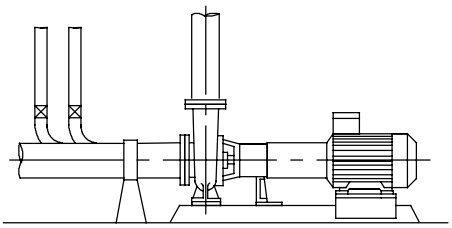

Fig. 8

COPYRIGHT © SULZER PUMPS FINLAND OY

7 Auxiliary piping

WARNING

During operation – leakage of hazardous substances can occur – prepare proper means for a safe waste removal.

7.1 Sealing liquid pipings

To guarantee faultless shaft seal operation, it may be necessary to lead sealing, flushing or cooling liquid to the seal. Design of the auxiliary piping depends on the construction of the shaft seal and sealing water equipment in question.

For the design and connection details for auxiliary piping, see the sectional drawings of shaft seal and sealing water equipment. Nominal sizes for connections are given in the part list.

The pressure rating of auxiliary piping has to be minimum 87 psi (0,6 MPa) but at least as much as the pressure on the suction side. However, the pressure rating of auxiliary piping for shaft seals using Recirculation from pump discharge or Pressurized external sealing liquid must not be less than that of the casing, see Section ”Product description/Mechanical durability”.

The temperature rating of auxiliary piping has to be minimum the same as temperature limit for the shaft seal, see the seal manufacturer’s instructions.

Install flow regulating valves in the sealing liquid pipes. A rotameter or other flow meter as well as a pressure gauge are also useful in many cases. A non-return valve can be used to prevent the pumped liquid entering the sealing liquid pipes. Often these devices are already included in the delivery of the sealing water equipment; check from the part list and sectional drawing of sealing water equipment.

The piping for Quench seals is installed so that the pipe which leaves the seal (021.01) is continuously falling, the pipe is as short as possible and there are no points throttling the flow, because the throttling bush or the v-ring seal is not meant for pressurized sealing liquid. Fig. 9.

Clean the sealing liquid piping carefully before commissioning.

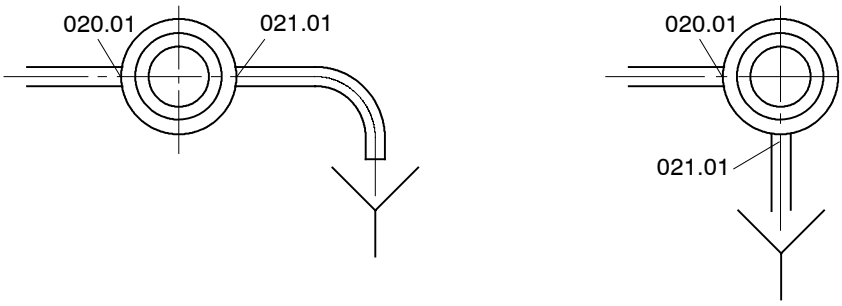

Fig. 9

COPYRIGHT © SULZER PUMPS FINLAND OY

7.2 Bearing unit pipings

The pipings for pure and purge oil mist lubricated bearing unit have to install according to corresbonding sectional drawing connection numbers 056.01 (oil inlet) and 057.01 (oil outlet).

8 Installation and alignment of coupling

W A R N I N G
Before beginning any installation or alignment procedures, make sure the drive motor cannot be started by any means.

N O T E
Satisfactory performance of the coupling depends on correct installation and alignment.

For procedures and alignment accuracy to be followed when installing and disassembling the coupling, see separate instructions supplied by the coupling manufacturer.

When applicable, the coupling has already been installed and prealigned at the factory. However, the alignment may change due to faulty hoistings, baseplate support, piping support, thermal expansion or the like. Therefore check the shaft alignment of the coupling and re-align during the following stages:

1. After supporting of piping and before starting the pump, tighten the fixing screws of the pump and align the coupling to the required accuracy. Fig. 10.
2. After running the pump with water, look for changes caused by the water run. Correct the changes by altering the supporting of the piping. Tighten the fixing screws of the pump and align the coupling.
3. Carry out hot alignment if the temperature of pumped liquid is higher than (212 °F) 100 °C. The alignment is carried out during production run immediately after the pump is stopped while the pump and the motor are still at the operating temperature. The need for hot alignment depends on the extent of temperature differences and the coupling type chosen.

Aligment is checked by measuring the angular and parallel misaligments in vertical (6 and 12 o'clock) and horizontal (3 and 9 o'clock) directions. During the alignment, the coupling halves have to be locked together so that they do not move against each other. If needed, correct the aligment by adding and removing shims from under the feet of the motor and shifting the motor horizontally, until the shafts are aligned within the given tolerances. Fig. 10.

COPYRIGHT © SULZER PUMPS FINLAND OY

COPYRIGHT © SULZER PUMPS FINLAND OY

8.1 Maximum tolerances for coupling alignment

The maximum tolerances for angular and parallel alignments are given in Fig. 10.

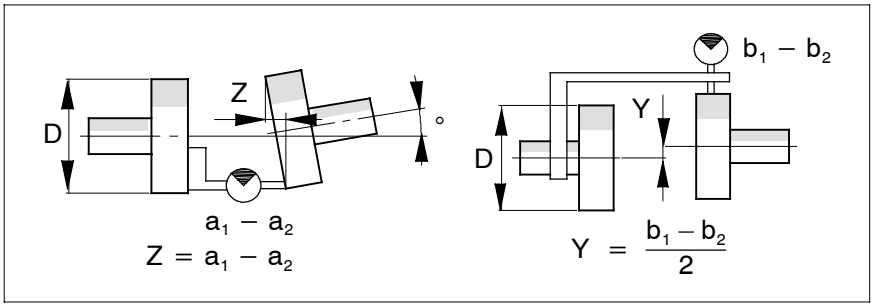

D		Z max						Y max			
		≤1800 rpm			>1800 rpm			≤1800 rpm		>1800 rpm	
in	mm	in	mm	°	in	mm	°	in	mm	in	mm
0 - 4	0 - 100	0.003	0.08	0.06	0.002	0.05	0.04	0.004	0.10	0.003	0.07
>4 - 8	>101 - 200	0.004	0.10	0.05	0.003	0.08	0.03	0.006	0.15	0.004	0.10
>8 - 12	>201 - 300	0.006	0.15	0.03	0.004	0.10	0.02	0.008	0.20	0.006	0.15
>12 - 16	>301 - 400	0.008	0.20	0.03	0.004	0.10	0.02	0.010	0.25	0.006	0.15

Fig. 10

COPYRIGHT © SULZER PUMPS FINLAND OY

SULZER

Operation

Version 02 > / 20010515 / en / **N15066**

Contents *Page*

1 Safety procedures before start-up 1

1.1 Leakage test 1

1.2 Direction of rotation 2

1.3 Free rotation 2

1.4 Coupling alignment 2

1.5 Lubrication 3

1.6 Shaft seal and sealing water 3

2 Starting the pump 5

3 Controls during the first run 7

4 Shut-down procedure 8

5 Controls after the first run 8

6 Trouble-shooting -operation 8

COPYRIGHT © SULZER PUMPS FINLAND OY

COPYRIGHT © SULZER PUMPS FINLAND OY

1 Safety procedures before start-up

Before starting the pump for the first time and after service repairs, the following precautionary measures are always to be checked carefully to prevent any accidents and to guarantee a trouble-free operation of the pump.

WARNING
Make sure that the motor cannot be started by any means accidentally during the following procedures.

NOTE
Pressure containing pump parts are not pressure vessels within the meaning of the regulations for pressure vessels.

CAUTION
The pump will be damaged if run in the wrong direction.

1.1 Leakage test

The pump parts and the piping shall be able to withstand a leakage test before the start-up. Leakage, particularly in the suction piping, can seriously reduce the performance of the pump and make it impossible to prime the pump before the start-up.

COPYRIGHT © SULZER PUMPS FINLAND OY

COPYRIGHT © SULZER PUMPS FINLAND OY

1.2 Direction of rotation

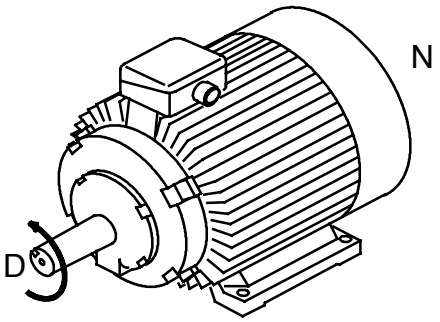

Fig. 1

- Before commissioning, always check the motor for correct rotation.
- It is imperative to detach the coupling spacer before checking the rotation direction of the motor.

The motor rotation must be counter-clockwise when viewed from the coupling end (D-end, Fig. 1) of the motor. (The pump rotation is clockwise when viewed from the coupling end.)

The direction of rotation must correspond to the arrow sign (972.01) on the bearing housing (330.01).

1.3 Free rotation

Rotate the coupling by hand with the coupling spacer detached.

1.4 Coupling alignment

Check that the coupling has been properly aligned according to the instructions in Section ”Installation and alignment of coupling”.

W A R N I N G

Before starting - all safety devices (e.g coupling guards) must always be correctly installed. For explosive areas, guards with non-sparking materials are to be used.

COPYRIGHT © SULZER PUMPS FINLAND OY

1.5 Lubrication

WARNING

A pump unit operating without proper lubrication will damage the bearings and cause a pump seizure. Use grease lubrication always when the pump is mounted in an inclined position.

Check the oil or grease used for the lubrication of both the pump and motor bearings before start-up. Condensation or ingress of dirt and water may occur if the pump unit is stored for a long time before installation and start-up.

1.6 Shaft seal and sealing water

Depending on the shaft seal fitting, check that the shaft seal's piping arrangement is properly installed and the sealing water system operates with suitable service of the shaft seal.

Table 1 Shaft seal fittings

Fitting				Liquid FR	FE	Q	BF	BN
PL01								
PL02				X				
PL03					X			
PL04							X	
ME01	MC01	MR01						
ME02	MC02	MR02		X				
ME03	MC03	MR03			X			
ME04	MC04	MR04				X		
ME06	MC06	MR06		X				
	MC20	MR20				X		
	MC21	MR21					X	
	MC22	MR22						X
DS01								
DS02				X				
DS03					X			

FR = Internal circulation

FE = External flushing liquid; (P_T + 7 psi, 0.8 USGPM) P_T + 0.05 MPa, 3 l/min

Q = Unpressurized external sealing liquid; (0.8 USGPM) 3 l/min

BF = Pressurized external flowing sealing liquid; (P_T + 7 psi (minimum), 0.8 USGPM) P_T + 0.05 MPa, 3 l/min

BN = Pressurized external non-flowing sealing liquid; (P_T + 21 psi (minimum)) P_T + 0.15 MPa

Pressure behind the impeller can be calculated according the following formulas.

COPYRIGHT © SULZER PUMPS FINLAND OY

COPYRIGHT © SULZER PUMPS FINLAND OY

Impellers with balancing holes

$p_T = p_0 - 0.725$ psi

Where p_T = pressure behind the impeller (psi)

p_0 = inlet pressure (psi)

Atmospheric pressure used as reference pressure = 0 psi

Impellers without balancing holes

$$p_T = p_0 + 151.48 \times 10^{-6} \varrho g H - 240.26 \times 10^{-9} \varrho n^2 \left[(d_2/2)^2 - (d_b/2)^2 \right]$$

$$- k \times 216.4 \times 10^{-9} \varrho n^2 \left[(d_b/2)^2 - (d_5/2)^2 \right] \text{psi}$$

Where p_T = pressure behind the impeller (psi)

p_0 = inlet pressure (psi)

ϱ = density of the liquid being pumped (lb/ft^3)

g = 32.174 (ft/s^2)

H = pump head at the operating point in question (ft)

n = rotating speed of the pump (rpm)

d_2 = impeller back plate diameter (ft)

d_b = impeller back vane diameter (ft)

d_5 = impeller hub diameter is in bearing unit no. 1 0.12 ft,

in bearing unit no. 2 0.18 ft, and in bearing unit no. 3 0.2 ft

k= figure 1

Atmospheric pressure used as reference pressure = 0 psi

COPYRIGHT © SULZER PUMPS FINLAND OY

COPYRIGHT © SULZER PUMPS FINLAND OY

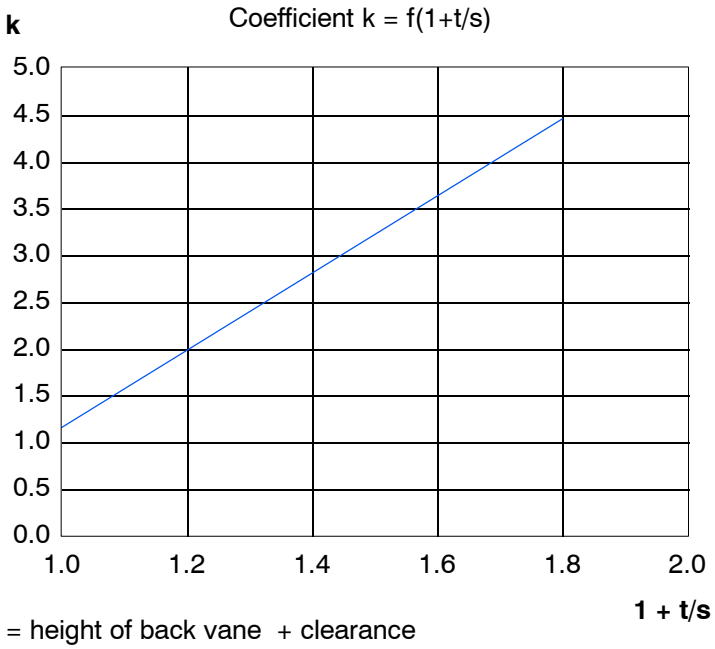

s = height of back vane + clearance

t = height of back vane

Fig. 1

The flushing liquid and sealing liquid must fulfill the following quality requirements:

- maximum particle size (0.002 in) 50 µm
- maximum solid material content (0.00027 lb/in^3) 2 mg/l

2 Starting the pump

WARNING

The product is meant only for the purpose for which it is sold – never operate beyond the intended use described in these instructions.

WARNING

Before starting – Make sure that the pump is sufficiently filled with the pumped liquid.

COPYRIGHT © SULZER PUMPS FINLAND OY

WARNING

Rotating shaft has no safety guard. Do not touch shaft by hand, tool or anything else.

CAUTION

Observe immediately after start-up the instrumentation showing the discharge pressure. If the pressure is not quickly reached, stop the motor and check causes for the low pressure.

CAUTION

If it is necessary to adjust the amount of pumped liquid, do it by adjusting the discharge valve. Never use the suction valve for flow adjustment.

- Open the valves for sealing water if any, and adjust suitable pressure and flow.
- Check that there is abundant leakage at the gland packing. If there is no continuous leakage, slacken the stuffing box gland. If this does not help, remove the packings and re-pack the stuffing box less tight.
- Fill the pump so that at least the suction pipe and pump casing are filled with liquid. The pump must not run dry even momentarily.
- Check that the suction valve is fully open and discharge valve closed.
- Start the motor.
- Open the discharge valve gradually until the desired amount of liquid is reached.
- Check that the gland packing leakage is still abundant. If not, slacken the stuffing box gland immediately. If this does not help and the gland packing becomes hot, stop the pump and find out the reason for the disturbance. When the gland packing has been operating trouble-free for 10 minutes it may be tightened. Tighten it by turning the hexagonal nuts approx. 1/6 turns at a time at 5 - 10 minutes' intervals until the leakage is at least 30 - 80 drops a minute. While tightening, make sure that the stuffing box gland remains perpendicular to the shaft.

COPYRIGHT © SULZER PUMPS FINLAND OY

COPYRIGHT © SULZER PUMPS FINLAND OY

3 Controls during the first run

WARNING

Personal injuries may occur if personal protective equipment is not used when servicing the product. When pumping hazardous liquids, skin and eye protection are required.

WARNING

Rotating shaft has no safety guard. Do not touch shaft by hand, tool or anything else.

CAUTION

Do not operate the pump below the minimum recommended flow or with the discharge valve closed. Cavitation or recirculation can lead to a quick pump failure

By controlling the pump operation and output regularly, the possible need for service and repair can be anticipated. In this way, the pump efficiency is kept high, the process is trouble-free and the maintenance costs are low.

Control the temperature of the gland packing and maintain the leakage at 30 – 80 drops/minute by adjusting the stuffing box gland.

The flow and pressure of sealing water must be kept at the enclosed values given by the seal manufacturer.

Check the temperature and vibration of bearings through regular measurings. If one or the other increases, it may be a sign of incorrect lubrication or bearing damage. The measuring studs (SPM, M8 x 24) are in the bearing housing for controlling the bearings.

Also, any noises from the pump and its vibration have to be controlled and the reasons for unusual noises or vibration detected.

The condition of the coupling can be monitored with a stroboscope through the perforation in the coupling guard.

COPYRIGHT © SULZER PUMPS FINLAND OY

COPYRIGHT © SULZER PUMPS FINLAND OY

4 Shut-down procedure

- Close the discharge valve to prevent the pumped liquid from flowing back.
- Stop the motor.
- Close the suction valve if there is reason to doubt that the pumped liquid will flow out of the suction piping.
- Close the cooling and flushing liquid valves, if any.
- If the pump has a sealing liquid valve, it cannot be closed until the pump has been drained or until at least the pressure has been relieved from the pump.

During longer shut-downs, the pump must be checked every now and then. Turn the shaft manually a few times. If the pumped liquid congeals easily or the pump is exposed to freezing, drain the pump and suction piping for the shut-down period.

5 Controls after the first run

N O T E
Correct final alignment is essential for the proper functioning of the pump unit.

When the pump unit has run for a sufficient length of time to bring the pump and motor up to the normal operating temperature, check the coupling alignment according to Section ”Installation and alignment of coupling”.

With hot liquid pumps, check the tightness of the casing cover fixing screws. Adjust torque in accordance with the reference values.

With pumps equipped with gland packing, check proper leakage from the stuffing box.

With pumps equipped with mechanical seals, ensure that the flushing or cooling supplies are functioning adequately.

Make sure that the sealing water system is working properly.

Check that there is no overheating in the pump or motor bearings.

6 Trouble-shooting -operation

During the start-up period, problems are mostly caused by pump selection mistakes, poor process design, operational mistakes or foreign objects in the process.

During the long-term operation of a pump unit, problems are mostly caused by random failures, process changes or corrosion and wear.

COPYRIGHT © SULZER PUMPS FINLAND OY

Problems can normally be traced to either poor maintenance or exceeding the limitations for the intended use of the pump.

The following problem tracing analysis includes the most common malfunctions and their possible causes. If the pump does not function properly, it is important to trace the actual reasons, so that the repairs and required modifications can be done without delay. Tables 2 – 8.

Table 2 Symptom: Pump not delivering liquid

Probable cause:	Remedy:
Wrong direction of rotation	Change the direction of rotation acc. to the arrow sign on the bearing unit
Pump not adequately primed or a vapor lock in the suction pipe	Reprime the pump and suction piping
Difference between inlet pressure and vapor pressure too small	Check the suction piping arrangements
Air leakage in suction opening, suction piping or shaft seal	Check the suction piping. Readjust the shaft seal
Suction piping, suction valve or impeller clogged	Check the suction piping and the pump for any obstructions
Rotational speed too low	Check the speed requirements/limitations
Flow resistance of the piping higher than the head generated by the pump	Check resistancies and reduce losses
Unexpected air/gas content in the pumped liquid	Consult manufacturer for further instructions
Suction tank level low	Check the required inlet/suction head

Table 3 Symptom: Insufficient head

Probable cause:	Remedy:
Unexpected air/gas content in the pumped liquid	Consult manufacturer for further instructions
Unexpected viscosity of the pumped liquid	Consult manufacturer for further instructions
Suction piping, suction valve or impeller clogged	Check the suction piping and the pump for any obstructions
Rotational speed too low	Check the speed requirements/limitations
Wrong direction of rotation	Change the direction of rotation acc.to the arrow sign on the bearing unit
Flow resistance of the piping higher than the head generated by the pump	Check resistancies and reduce losses
Pressure containing pump parts worn/damaged/clogged	Check the pump and replace defective parts, if necessary
Suction tank level low	Check the required inlet/suction head

Table 4 Symptom: Insufficient (or irregular) flow

Probable cause:	Remedy:
Vapor lock in the suction pipel	Reprime the pump and suction piping
Suction head too high	Check that the suction valve is fully open and that the suction line is unobstructed
Difference between inlet pressure and vapor pressure too small	Check the suction piping arrangements
Air leakage in suction opening, suction piping or shaft seal	Check the suction piping and readjust the shaft seal
Unexpected air/gas content in the pumped liquid	Consult manufacturer for further instructions
Unexpected viscosity of the pumped liquid	Consult manufacturer for further instructions

COPYRIGHT © SULZER PUMPS FINLAND OY

Probable cause:	Remedy:
Suction piping, suction valve or impeller partially clogged	Check the suction piping and the pump for any obstructions
Rotational speed too low	Check the speed requirements/limitations
Flow resistance of the piping higher than the head generated by the pump	Check resistancies and reduce losses
Pressure containing pump parts worn/damaged/clogged	Check the pump and replace defective parts, if necessary

Table 5 Symptom: High power consumption

Probable cause:	Remedy:
Rotational speed too high	Check the speed requirements/limitations
Wrong direction of rotation	Change the direction of rotation acc.to the arrow sign on the bearing unit
Flow resistance of the piping much higher/lower than the head generated by the pump	Check the piping arrangements
Unexpected specific gravity of the pumped liquid	Consult manufacturer for further instructions
Unexpected viscosity of the pumped liquid	Consult manufacturer for further instructions
Pump and motor incorrectly aligned	Realign the pump and motor assembly, make sure there is no strain on the pump.
Crooked or eccentric shaft	Reassemble the pump and renew the shaft and bearings, if necessary
Rotating objects or pump parts chafing inside the pump	Reassemble the pump and check the clearances
Pressure containing pump parts worn/damaged/clogged	Check the pump and replace defective parts, if necessary
Mechanical tightness of pump components	Reassemble the pump and check the clearances

Table 6 Symptom: Excessive noise and/or vibration

Probable cause:	Remedy:
Difference between inlet pressure and vapor pressure too small (cavitation)	Check the suction piping arrangements
Unexpected air/gas content in the pumped liqud	Consult manufacturer for further instructions
Air leakage in suction opening, suction piping or shaft seal	Check the suction piping/readjust the shaft seal
Suction piping, suction valve or impeller clogged	Check the suction piping and the pump for any obstructions
Rotational speed too low	Check the speed requirements/limitations
Flow resistance of the piping higher than the head generated by the pump	Check resistancies and reduce losses
Pump functioning below the recommended minimum flow (cavitation)	Check the pumping system requirements
Pump foundation not rigid enough	Strengthen the foundation
Inadequate piping support exerting strain on the pump	Check the piping support requirements
Pump and motor incorrectly aligned	Realign the assembly, make sure there is no strain on the pump.
Crooked or eccentric shaft	Reassemble the pump and renew the shaft and bearings, if necessary
Rotating objects or pump parts chafing inside the pump	Reassemble the pump and check the clearances

COPYRIGHT © SULZER PUMPS FINLAND OY

COPYRIGHT © SULZER PUMPS FINLAND OY

Probable cause:	Remedy:
Pressure containing pump parts worn/damaged/clogged	Check the pump and replace defective parts, if necessary
Mechanical tightness of pump components	Reassemble the pump and check the clearances
Bearings worn or loose	Reassemble the pump and replace the bearings, if necessary
Inadequate or excessive lubrication	Check the pump for proper lubrication
Impeller damaged or out of balance	Reassemble the pump and replace the impeller, if necessary

Table 7 Symptom: Bearings wear rapidly

Probable cause:	Remedy:
Pump and motor incorrectly aligned	Realign the pump assembly, make sure there is no strain on the pump. Replace the bearings, if necessary.
Crooked or eccentric shaft	Reassemble the pump and straighten or replace the shaft
Rotating objects or pump parts chafing inside the pump	Reassemble the pump and check the clearances
Impeller damaged or out of balance	Reassemble the pump and replace the impeller, if necessary
Inadequate or excessive lubrication	Check the pump for proper lubrication
Badly installed and/or dirty bearings	Renew bearings, if necessary. Check the quality and amount of lubricant

Table 8 Symptom: Pump overheats/seizes

Probable cause:	Remedy:
Pump not adequately primed	Reprime the pump and suction piping
Difference between inlet pressure and vapor pressure too small	Check the suction piping arrangements. The pump may operate below the recommended minimum flow (cavitation)
Pump functioning below the recommended minimum flow (cavitation)	Check the pumping system requirements
Pump and motor incorrectly aligned	Realign the assembly, make sure there is no strain on the pump
Bearings worn	Reassemble the pump and replace the bearings, if necessary
Crooked or eccentric shaft	Reassemble the pump, straighten or renew the shaft
Impeller damaged or out of balance	Reassemble the pump and replace the impeller, if necessary
Rotating objects or pump parts chafing inside the pump	Reassemble the pump and check the clearances
Discharge valve closed	Open the discharge valve
Discharge valve clogged	Check the pipe and flush it if necessary

COPYRIGHT © SULZER PUMPS FINLAND OY

SULZER

Preventive maintenance

Version 03 > / 20040401 / Replaces 20020501 / en / **N15254**

Contents *Page*

1 General 1

2 Grease lubrication 2

2.1 Grease grades 3

3 Oil lubrication 4

3.1 Oil bath lubrication 4

3.2 Pure oil mist and purge oil mist lubrication 6

4 Temperatures 6

5 Noise and vibration analysis 7

6 Discharge pressure 7

7 Corrosion and wear 7

8 Shaft seal monitoring 7

8.1 Gland packing 7

8.2 Mechanical seal 8

8.3 Dynamic seal 8

9 Pump washdown 8

10 Maintenance of shaft seals 8

10.1Gland packing 9

10.2 Mechanical seal 11

10.3 Dynamic seal 11

COPYRIGHT © SULZER PUMPS FINLAND OY

COPYRIGHT © SULZER PUMPS FINLAND OY

1 General

N O T E
Preventive maintenance is also a relevant safety factor.

N O T E
If the pump performance does not fulfill the process requirements, the pump is to be disassembled and inspected. All worn parts should be changed to new genuine spare parts.

Regular and systematic preventive and predictive maintenance can extend the product lifetime and requires fewer repairs and spare parts. Monitoring of instrumentation and physical examinations are a vital part of today's quality maintenance. We recommend that the maintenance system includes a historical record kept for each pump, its condition and performance. This will help to prevent sudden failures and aid in case of possible fault tracing analyses. In the process industries, one process downtime caused by a pump normally costs much more than the price of the pump.

Preventive maintenance consists of the following actions:

- Bearing lubrication
- Temperature, noise, vibration monitoring and inspections
- Monitoring the discharge pressure, capacity and power demand
- Inspections regarding corrosion and wear
- Shaft seal monitoring
- Regular pump washdowns
- Monitoring the pump and pipings for leakage
- Quarterly checks of the tightness of critical fasteners, such as foundation screws and pump & motor fasteners onto the baseplate

General measuring instruments for pump operation are presented in Table 1.

COPYRIGHT © SULZER PUMPS FINLAND OY

Table 1 ***Measuring instruments***

Fixed instruments:	Portable instruments:
Pressure gauges & indicators	Vibration analysers
Flow meters	Tachometers
Ammeters/wattmeters/ voltmeters	Thermometers
Speed indicators	Noise level indicators
Temperature detectors	Ultrasonic indicators (wall thickness)
Vibroswitches	
Any fixed or portable instruments may in themselves create a possible failure and require regular monitoring to ensure their correct functioning.	

2 Grease lubrication

All the grease-lubricated bearings have been lubricated before the shipment. The pump has one cylinder roller bearing unit and two single row angular contact ball bearings (O-system, Table 2).

Table 2 ***Pump bearings***

Bearing unit	Impeller side	Coupling side
1	NUP 207 ECJ	3306AJ (5306AJ)
2	NUP 311 ECJ	2×7309 BECBM
3	NUP 317 ECJ	2×7315 BECBM
SKF designation. If other manufacturers are used, the corresponding bearing types are required.		

Amounts of lubricants and re-lubrication intervals are described in Table 3 and in Table 4 depending on the speed of rotation.

Table 3 ***Initial and re-lubrication (50 Hz speeds of rotation)***

Bearing unit	Initial lubrication				Re-lubrication				Re-lubrication interval [1] (hours, bearing housing temperature ≤ +130 °F / +55 °C)			
	Impeller side		Coupling side		Impeller side		Coupling side		740 rpm	980 rpm	1480 rpm	2950 rpm
	(oz)	(g)	(oz)	(g)	(oz)	(g)	(oz)	(g)				
1	0.7	20	1.5	43	0.22	6	0.40	11	15000	13000	10000	5000
2	3.0	85	3.0	85	0.60	17	0.90	26	13000	11000	8500	3000
3	5.0	142	7.5	213	1.3	37	2.1	60	12000	9500	6500	-
[1] Every 59 °F (15 °C) rise in the surface temperature shortens the lubrication interval to a half.												

COPYRIGHT © SULZER PUMPS FINLAND OY

Table 4 Initial and re-lubrication (60 Hz speeds of rotation)

Bearing unit	Initial lubrication				Re-lubrication				Re-lubrication interval [1] (hours, bearing housing temperature ≤ +130 °F / +55 °C)			
	Impeller side		Coupling side		Impeller side		Coupling side		890 rpm	1180 rpm	1780 rpm	3540 rpm
	(oz)	(g)	(oz)	(g)	(oz)	(g)	(oz)	(g)				
1	0.7	20	1.5	43	0.22	6	0.40	11	14000	11000	9000	4000
2	3.0	85	3.0	85	0.60	17	0.90	26	12000	9500	7000	2000
3	5.0	142	7.5	213	1.3	37	2.1	60	10000	8000	4500	-

[1] Every 59 °F (15 °C) rise in the surface temperature shortens the lubrication interval to a half.

2.1 Grease grades

CAUTION

Never mix different grease grades (consistency, thickeners). The mixed grease becomes softer and does not lubricate the bearings properly.

NOTE

All greasing equipment and fittings used must be clean to prevent any impurities from entering the bearing housing.

NOTE

The surface temperature of the bearing unit can temporarily rise after regreasing due to an excess amount of grease.

For normal conditions when the bearing housing surface temperature is below (+175 °F) +80 °C, we recommend lithium or lithium-calcium-based mineral greases for roller bearings, such as:

- Esso Beacon 2
- Shell Alvania EP2
- SKF LGMT2
- Klüber Centoplex EP2

COPYRIGHT © SULZER PUMPS FINLAND OY

The first re-lubrication should be done before the initial commissioning of the pump.

If the bearings run hotter and the surface temperatures are above (+175 °F) +80 °C, we recommend the use of the following special greases:

- Esso Unirex N3
- SKF LGHT3
- Shell Limona LX1
- Klüber Staburax NBU 8 EP

These special greases can also be used with surface temperatures below +175 °F (+80 °C).

Always consult the pump manufacturer about the use of any special greases (not mentioned in these instructions).

3 Oil lubrication

CAUTION
For delivery, the bearing housing of the pump has been emptied of oil. Remember to refill it or / and connect oil mist lubrication before starting.

For lubrication, use only high-quality mineral oils, the viscosity of which is ISO VG 46.

- Esso Teresso 46
- Shell Tellus Oil S46
- Mobil DTE Oil Medium
- Neste Paine 46
- Klüber Crucolan 46
- Tebo Larita Oil 46

Viscosity of oil at the operating temperature must not be below 12 cSt (65 SSU). The operating temperature is ca (27 °F) 15 °C higher than the surface temperature of the bearing housing.

3.1 Oil bath lubrication

First oil filling

Without using the constant level oiler

Unscrew the venting device (672.01) and add oil up to the middle of the sight glass (642.01), Fig. 1. When pump is running oil level in the larger sight glass can be little variable. With lower speed oil level can go little bit lower and higher speed go little up (air is mixing into oil). Screw the venting device (672.01) back in place. See the oil volumes in Table 6.

COPYRIGHT © SULZER PUMPS FINLAND OY

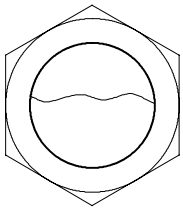

642.01

Fig. 1

With using the constant level oiler

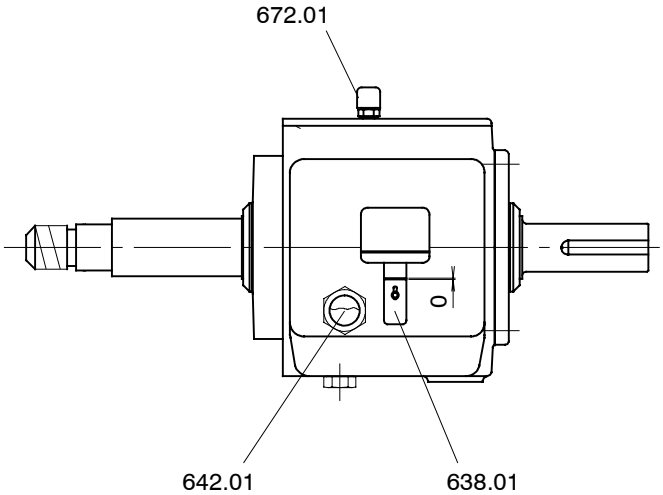

Fig. 2

1 Install the constant level oiler (638.01) in the bearing unit.

2 Adjust the constant level oiler (638.01) to the correct height (0 mm) and tighten the locking screw.

3 Unscrew the venting device (672.01), add oil up to the middle of the sight glass (642.01) and screw the venting device (672.01) back in place.

4 Undo the glass cup of the constant level oiler (638.01) and fill it with oil, and place the glass cup of the constant level oiler (638.01) back in place.

Oil change

After commissioning, oil should be changed for the first time after about 100 hours of operation and thereafter according to Table 5 and more often if the operating conditions cause contamination or change in other properties of the oil used.

Table 5 ***Oil changes***

Bearing housing surface temperature	Oil change interval
65 °C (150 °F)	1 year
75 °C (170 °F)	6 months

COPYRIGHT © SULZER PUMPS FINLAND OY

Table 6 ***Oil volumes***

Bearing unit	Oil volume	
	(pint)	(l)
1	0.75	0.35
2	2.4	1.1
3	4.7	2.2

3.2 Pure oil mist and purge oil mist lubrication

The oil mist system must be sized to provide, as a minimum, a rate of mist containing 0.018 in^3 (0.01 fl oz or 0.3 ml) of oil per hour per bearing-inch (B.I.). Oil mist system pressure depends on the particular application (number of equipment in the system, type of application fittings used, etc.). Follow the oil mist system manufacturer's instructions for the installation, operation and maintenance of the oil mist system.

B.I. values for each bearing unit are listed in the following table. For pure mist system the values can be used as such. For purge mist system, multiply values by 0.25.

In purge oil mist system, follow also the instructions as given in section "Oil bath lubrication".

Table 7 ***Bearing-Inch values for CPT bearing units***

Bearing unit	Bearing	Bearing-Inch (B.I.)
1	Radial	1.4
	Thrust	2.4
	Total	3.8
2	Radial	2.2
	Thrust	3.6
	Total	5.8
3	Radial	3.4
	Thrust	6.0
	Total	9.4

4 Temperatures

During operation, the following surface temperatures are to be observed regularly:

- volute casing (102.01)
- bearing housing (330.01)
- shaft seal, measured on the casing cover (161.01)
- motor (800.01)

The reasons for any deviations in temperatures are to be checked immediately to prevent further and more serious damage.

COPYRIGHT © SULZER PUMPS FINLAND OY

5 Noise and vibration analysis

A regular follow-up of the pump noise and vibration gives a good view regarding the condition and wear of bearings and also other wearing parts of the pump. This enables timely predictive maintenance routines and reduces the potential for unexpected shut-downs. Admissible vibration severity values are presented in Section ”Safety instructions/Balance and vibration”.

6 Discharge pressure

A regular control of the pressure generated by the pump, the rated flow and the power need of the drive unit gives a good view regarding the condition and wear of the hydraulic parts of the pump. The follow-up enables such preventive maintenance actions as clearance adjustments or parts renewals to be scheduled accordingly.

7 Corrosion and wear

When the pumps are operating under corrosive and/or abrasive conditions, a regular follow-up of wall thicknesses in the casing and casing cover is necessary. When the wall thickness has worn more than the permitted corrosion allowance of (0.12 in) 3 mm, the mechanical durability (pressure limits) stated in these instructions is no longer guaranteed.

8 Shaft seal monitoring

CAUTION
The dry running of mechanical seals will damage the sliding surfaces and cause leakage of pumped liquid.

8.1 Gland packing

Gland-packed pumps must be checked regularly to ensure that there is a slight leakage from the gland. An excessively tight gland causes wear to the shaft sleeve and increased power demand. Refer to the instructions in Section ”Operation/Controls during the first run”.

COPYRIGHT © SULZER PUMPS FINLAND OY

8.2 Mechanical seal

Mechanical seals are normally installed and adjusted at the factory before the delivery. The general principle is that the mechanical seal does not have visible leakage. The lifetime of a mechanical seal depends on the cleanliness and lubricating properties of the pumped liquid and the sealing liquid. If the mechanical seal leaks, stop the pump and replace the mechanical seal.

8.3 Dynamic seal

The expeller (604.01) design of the dynamic seal prevents the leakage of pumped liquid through the stuffing box during operation. During shut-down, the leakage is prevented by the static seal design (435.01).

9 Pump washdown

The pump is designed to prevent external liquids from entering the bearing unit. However, direct spraying of high-pressure water to the labyrinth rings (423.01) must be avoided.

10 Maintenance of shaft seals

W A R N I N G

Always stop the motor before any of the following maintenance actions to the pump. Make sure that the motor cannot be started by any means accidentally during the repairs.

W A R N I N G

Always drain the pump before dissassembling the shaft seal.When pumping hazardous liquids, make sure that there is no trapped liquid remaining in pump parts.

COPYRIGHT © SULZER PUMPS FINLAND OY

WARNING

Never use gland packing material containing asbestos. It may cause a health hazard.

10.1 Gland packing

- Remove the used gland packing from the stuffing box housing by using a flexible extraction tool (Fig. 3). Clean the stuffing box housing and open any clogged sealing liquid holes.

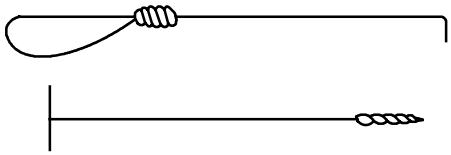

Fig. 3

- If there are scratches or wearing marks on the shaft wearing sleeve (part 524.01 in Table 8) or in the stuffing box housing, replace the damaged parts.
- We recommend the use of precompressed gland packings. However, if you need to cut the packings from a sealing band, proceed as follows: turn four rounds of the sealing band around a wooden pattern having the same thickness as the shaft wearing sleeve (part 524.01 in Table 7) and use a sharp knife to cut the packing rings straight and axially without overdimensioning or underdimensioning, Fig. 4. The dimensions of the stuffing box housing and the total length of the band to be cut without working allowances are given in Table 8.

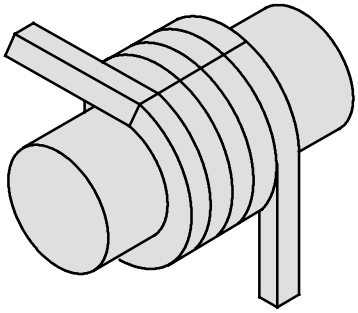

Fig. 4

- When packing new packing rings, be very precise, and keep the parts clean.
- Lubricate the shaft sleeve and packing rings lightly with oil.
- Push the first packing ring tightly against the neck bush (456.01). The ends of the rings must be exactly against each other.
- The second ring is placed against the first one so that the joints are at 180° angle to each other, Fig. 5.

COPYRIGHT © SULZER PUMPS FINLAND OY

- The third packing ring is placed against the second one so that the joints are at 180° angle to each other. Fig. 5.
- Next put the lantern ring or plate into the seal chamber.
- Fit also the last two rings with the joints at 180° angle to each other.
- After all the packing rings and the lantern ring have been fitted, tighten the nuts of the stuffing box gland by hand.
- The shaft seal is taken into use according to Section ”Operation/Controls during the first run”.

Table 8 ***Dimensioning of stuffing box***

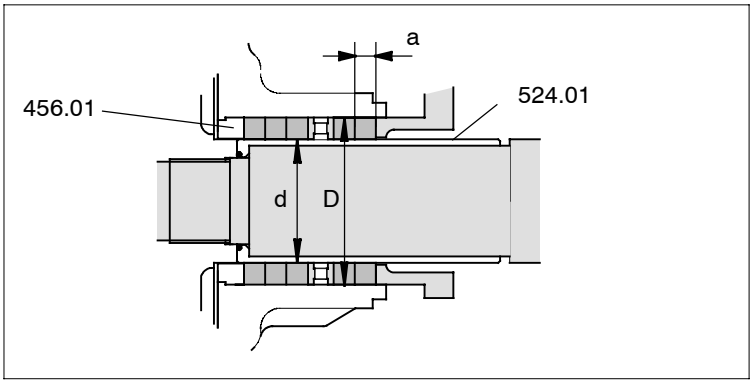

Bearing unit	Stuffing box ∅d x ∅D x a		Total lenght of the packing ring	
	(in)	(mm)	(in)	(mm)
1	1.375 x 2 x 0.31	35 x 51 x 8	2.8	71
2	2.25 x 3 x 0.38	57 x 76 x 10	4.3	109
3	2.5 x 3.38 x 0.44	64 x 86 x 11	4.8	122

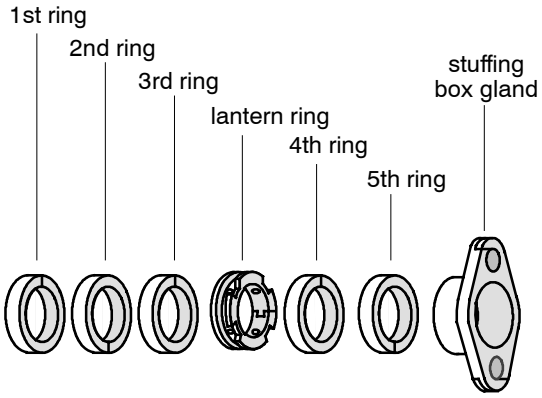

Fig. 5

COPYRIGHT © SULZER PUMPS FINLAND OY

10.2 Mechanical seal

Mechanical seals do not normally require any preventive maintenance actions during their operation. If any problems occur, the whole seal package is normally renewed.

10.3 Dynamic seal

Dynamic seals do not normally require any preventive maintenance actions. During the first years of operation, the static seal (435.01) can yet wear so much that some leakage can occur during stoppages. The static seal is again functional when sliding the thrust ring (475.01) towards the volute casing so long that the leakage stops. The thrust ring must always be secured with the grub screws (904.01) during operation. This adjustment can be done several times during the lifetime of the static seal. The wear allowance of the static seal is about half of its thickness. If the seal has worn more or otherwise damaged, it always has to be replaced with a new one according to Section ”Corrective maintenance”.

11 Clearance of open impeller

Exchange unit is preadjusted near to operating clearance. Preadjusting values can be readed from table 8. Fig. 6.

Table 9

Bearing unit	**Distance A**	
	(in)	(mm)
CPT 1	5.142	130.6
CPT 2	6.126 *) 6.750	155.6 *) 171.5
CPT 3	9.094	231.0

*) Retrofit type Durco MkII / III

COPYRIGHT © SULZER PUMPS FINLAND OY

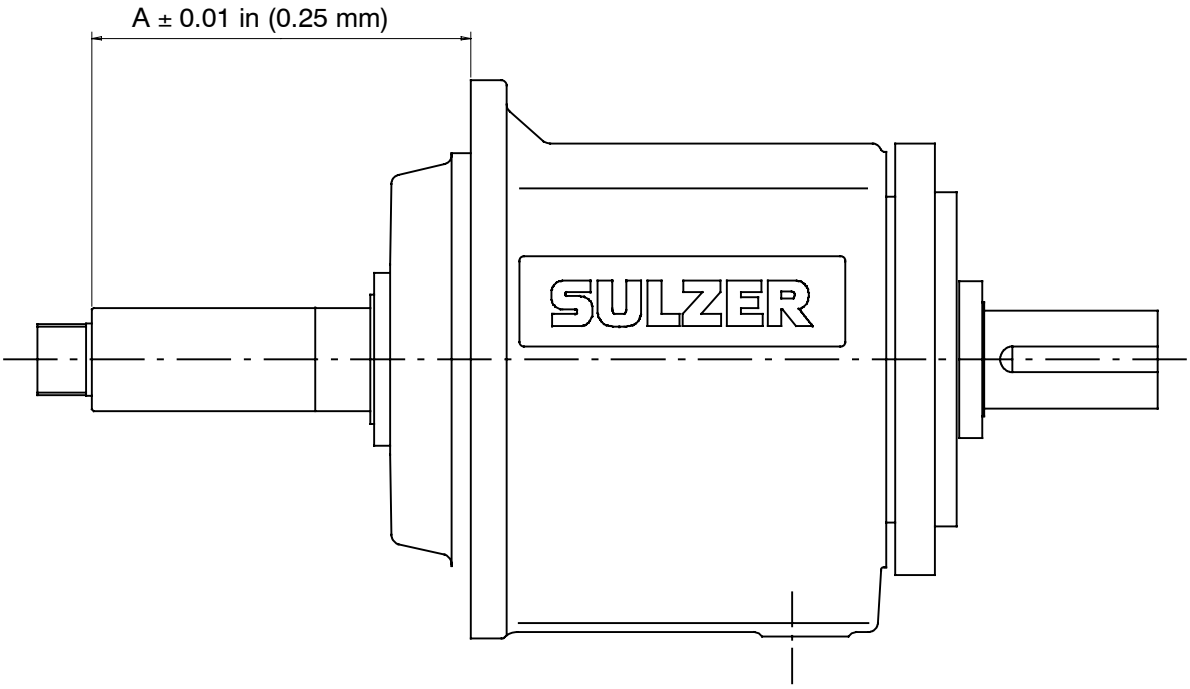

Fig. 6

WARNING

Always stop the motor before any of the following maintenance actions to the pump. Make sure that the motor cannot by any means be started accidentally during the repairs.

- Loosen the hexagonal screws (901.05) of bearing carrier (382.01).
- Turn bearing carrier clockwise until impeller (230.01) touches the casing (102.01). With Retrofit type Durco MkII / III this can be ignored.
- Turn bearing carrier (382 .01) CCW halfway between two notches to get 0.010 inches (0.3 mm)front clearance. When hexagonal screws (901.05) are tightened, the play in bearing carrier thread gives additional 0.005 inches (0.1 mm) front clearnce. If pumped liquid is over 250 °F, thicker casing gasket (400.01) is used and clearance before tightening screws (901.05) is set to 0.020 inches (0.5 mm) to get total 0.025 inches (0.6 mm) front clearance.
- With Retrofit type Durco MkII / III turn bearing carrier (382.01) counter clockwise until impeller (230.01) back vanes touches the casing cover (161.01 / 161.02). Turn bearing carrier clockwise from one notch to next. In bearing unit 2 there are four notches at the outer sphere of the bearing carrier. Turning the bearing carrier between two notches makes impeller back clearance 0.02 inches (0.5 mm) but turn only 70% of that to get 0.014 inches (0.35 mm) back clearance.

COPYRIGHT © SULZER PUMPS FINLAND OY

- In bearing units 1 and 2 there are four notches and in bearing unit 3 there are six notches at the outer sphere of the bearing carrier. Turning the bearing carrier between two notches makes impeller front clearance increase 0.02 inches (0.5 mm).
- After the adjustment tighten the hexagonal screws (901.05). Bearing carrier must not be turned during tightening. All three hexagonal screws (901.05) must be tightened as much. The tightening must be performed in stages. First all the screws will be tightened to half of the recommended moment and then to a full moment. See Section “Installation” table 1.
- By turning the coupling by hand, check that the pump can rotate freely.

If the shaft is adjusted, the cartridge shaft seal must also be adjusted again, except John Crane seal type SE1, SE2 and SEW have the adjustment allowances shown in table 10. Otherwise see the seal manufacturer’s instructions.

Table 10 John Crane SE1, SE2 and SEW adjustment allowances

Bearing unit	**Adjustment allowances**	
	(in)	(mm)
1	−0.059 ... +0.098	−1.5 ... +2.5
2	−0.059 ... +0.138	−1.5 ... +3.5
3	−0.059 ... +0.197	−1.5 ... +5.0

COPYRIGHT © SULZER PUMPS FINLAND OY

SULZER

Corrective maintenance

Version 03 > / 20080601 / Replaces 20051101 / en / **N15255**

Contents *Page*

1 Safety procedures before any repairs 1

2 Necessary equipment / tools 1

2.1 Normally available working tools: 1

2.2 Special tools 2

3 Disassembly 2

3.1 Preliminaries 2

3.2 Detachment of exchange unit 3

3.3 Detachment of impeller 4

3.4 Detachment of shaft seal 4

3.5 Disassembly of bearing unit 6

4 Reassembly 8

4.1 Preliminaries 8

4.2 Reassembly of bearing unit 8

4.3 Assembly of shaft seal 12

4.4 Installation of impeller 18

4.5 Installation of exchange unit 18

COPYRIGHT © SULZER PUMPS FINLAND OY

COPYRIGHT © SULZER PUMPS FINLAND OY

1 Safety procedures before any repairs

WARNING

When pumping hazardous liquids, secure that there is no trapped liquid remaining in pump parts.

Pumps which convey hazardous media must be carefully decontaminated before any repairs. Skin and eye protection are required during decontamination. Precautions are needed for personal or environmental safety.

Some of the disassembled parts and assemblies are heavy, unstable and due to design requirements they contain sharp edges (e.g. impeller, casing cover). Use proper hoistings and supports to prevent personal injury.

2 Necessary equipment / tools

2.1 Normally available working tools:

- Hoisting accessories. Note the safety requirements!
- Wrenches for hexagonal screws

  sizes (in): 1/2, 9/16, 3/4, 7/8, 15/16, 1 1/8
- Allen wrenches for socket head screws

  sizes (in): 5/32, 3/16
- Torque wrenches for

  moments (lbft): 20, 40, 95, 185, 310, 590

  moments (Nm): 30, 50, 130, 250, 420, 800

  – for hexagonal, sizes (in): 3/4, 15/16, 1 1/8
- Hooked wrenches, sizes (SKF): HN6, HN9, HN15, HN22, HN27, 718911
- Extractors
- Bearing heater
- Dial indicators
- Cleaning agents & equipment
- Lubricating agents & equipment

COPYRIGHT © SULZER PUMPS FINLAND OY

2.2 Special tools

- Pipe punch series for roller bearings. Fig. 9.

3 Disassembly

N O T E
Ensure that all eventual spare parts are available before the disassembly.

3.1 Preliminaries

1 Close the discharge valve.

2 Stop the motor. Make sure that the motor cannot be started by any means during the repair.

3 Close the suction valve.

4 Drain the pump carefully. For this, use the hexagonal plug (903.01) potentially situated at the bottom of the volute casing (102.01), Fig. 1.

COPYRIGHT © SULZER PUMPS FINLAND OY

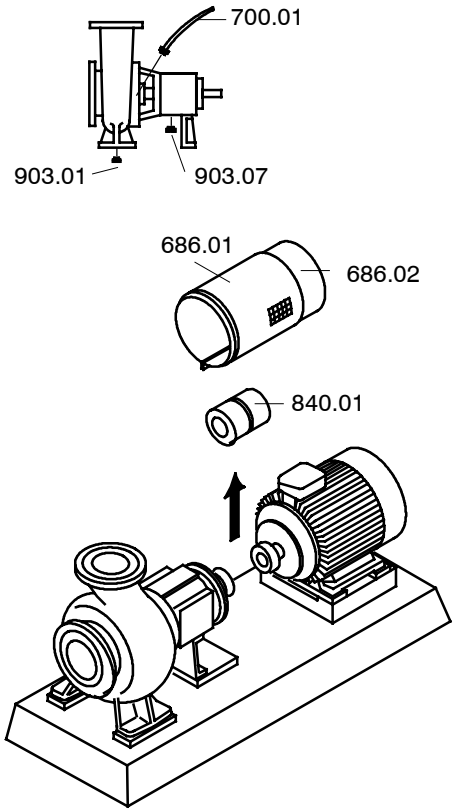

Fig. 1

5 Detach the pipes (700.01) in connection with the shaft seal, if applicable.

6 Remove the guard jacket (686.01) and coupling (840.01) spacer.

7 Drain oil from an oil-lubricated bearing housing by unscrewing the hexagonal plug (903.07).

8 Remove the adapter guard (683.01).

3.2 Detachment of exchange unit

1 Unscrew the hexagonal screws (901.01) of the adapter (344.01) and the hexagonal screws (901.09) of the support foot from the baseplate (890.01), Fig. 2.

2 Suspend the exchange unit by a hoist at the maintenance opening of the adapter or underneath the adapter.

3 Pull out the exchange unit by using the hexagonal screws (901.01).

COPYRIGHT © SULZER PUMPS FINLAND OY

COPYRIGHT © SULZER PUMPS FINLAND OY

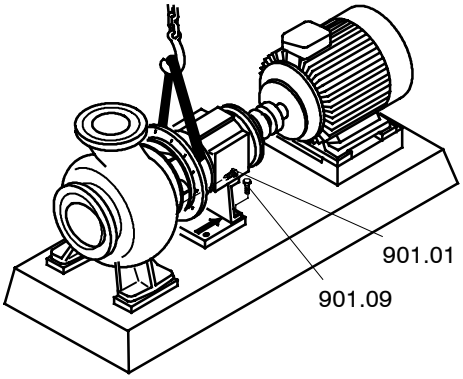

Fig. 2

3.3 Detachment of impeller

1 Fasten the exchange unit firmly to a vice. Fig. 3.

2 Prevent the shaft (210.01) from rotating at the coupling (840.01) end.

3 Detach the impeller by turning it counter-clockwise. Push e.g. pieces of wood between the impeller vanes to ease the detachment. Never use metal bars or the like, because they might damage the impeller vanes. Fig. 4.

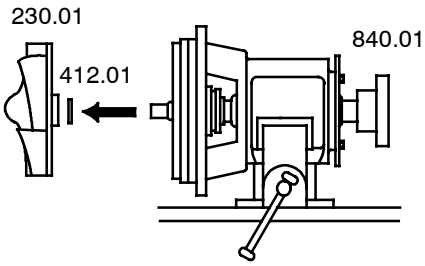

Fig. 3

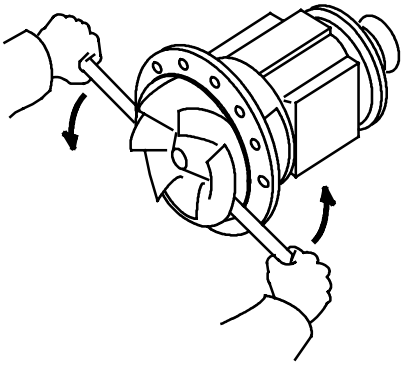

Fig. 4

3.4 Detachment of shaft seal

Refer to the sectional drawing of the shaft seal when reading through these instructions.

COPYRIGHT © SULZER PUMPS FINLAND OY

Gland packing, fittings PL01, PL02, PL03 and PL04

1 Unscrew the hexagonal screws (901.02) of the casing cover (161.01).

2 By using the said screws as extractors, draw the casing cover out of the adapter (344.01). All parts belonging to the gland packing, except the shaft wearing sleeve (524.01), will stay in the casing cover.

3 Unscrew the hexagonal nuts (920.02) and remove the two-piece stuffing box gland (452.01). The neck bush (456.01), gland packings (461.01) and lantern ring (458.01) can now be drawn out of the casing cover.

4 Detach the shaft wearing sleeve from the shaft with an extractor.

5 Unscrew the hexagonal screws (901.03) of the adapter and draw the adapter out by using the same screws as extractors.

Mechanical seal, fittings ME01, ME02, ME03, ME04 and ME06

1 Unscrew the hexagonal nuts (920.02).

2 Unscrew the hexagonal screws (901.02).

3 By using the said screws as extractors, draw the casing cover (161.01) out of the adapter (344.01). All parts belonging to the mechanical seal (433.01) will remain on the shaft.

4 The mechanical seal can now be removed from the shaft and dismantled according to the seal manufacturer's instructions.

5 Unscrew the hexagonal screws (901.03) of the adapter and draw the adapter out by using the same screws as extractors.

Mechanical seal, fittings MC01, MC02, MC03, MC04, MC06, MC20, MC21 and MC22

1 Unscrew the hexagonal nuts (920.02).

2 Unscrew the hexagonal screws (901.02).

3 By using the said screws as extractors, draw the casing cover (161.01) out of the adapter (344.01). All parts belonging to the mechanical seal (433.01) will remain on the shaft.

4 The mechanical seal can now be removed from the shaft and from the casing cover and dismantled according to the seal manufacturer's instructions.

5 Unscrew the hexagonal screws (901.03) of the adapter and draw the adapter out by using the same screws as extractors.

Mechanical seal, fittings MR01, MR02, MR03, MR04 and MR06

1 Unscrew the hexagonal nuts (920.02).

2 Unscrew the hexagonal screws (901.02).

3 By using the said screws as extractors, draw the casing cover (161.01) out of the adapter (344.01). All parts belonging to the mechanical seal (433.01) will remain on the shaft.

4 The mechanical seal can now be removed from the shaft and dismantled according to the seal manufacturer's instructions.

5 Unscrew the hexagonal screws (901.03) of the adapter and draw the adapter out by using the same screws as extractors.

COPYRIGHT © SULZER PUMPS FINLAND OY

Mechanical seal, fittings MR20, MR21 and MR22

1. Unscrew the hexagonal nuts (920.02).
2. Unscrew the hexagonal screws (901.02).
3. By using the said screws as extractors, draw the casing cover (161.01) out of the adapter (344.01). Most of the mechanical seal (433.01) together with integrated parts will remain on the shaft. Part of the seal will remain on the casing cover.
4. The mechanical seal can now be removed from the shaft and dismantled according to the seal manufacturer's instructions.
5. Unscrew the hexagonal screws (901.03) of the adapter and draw the adapter out by using the same screws as extractors.

Dynamic seal, fittings DS01, DS02 and DS03

1. Unscrew the hexagonal screws (901.02).
2. Remove the stuffing box cover (161.02) from the adapter (344.01) by using e.g. hexagonal screws for ejection. The other parts of the dynamic seal, except for the thrust ring (475.01), come off simultaneously in sizes 12 and 32. In other sizes, these parts either come off at the same time or stay on the shaft depending on the friction between the parts.

N O T E
With the size 32 excluded, these parts are not attached to each other in any way so take care not to drop them.

3. Open the hexagonal screws (901.07) in size 32. Remove the stuffing box housing (451.01) and the expeller (604.01) from the stuffing box cover, or pull the expeller and stuffing box housing out of the shaft if they did not come off during stage 2.
4. The cover plate for seal (471.02) and the static seal (435.01) can be detached by unscrewing the hexagonal screws (901.08).
5. Unscrew the grub screws (904.01) and detach the thrust ring (475.01) from the shaft.
6. Unscrew the hexagonal screws (901.03) of the adapter and draw the adapter out by using the same screws as extractors.

3.5 Disassembly of bearing unit

N O T E
Always renew the bearings once they have been removed from the shaft.

COPYRIGHT © SULZER PUMPS FINLAND OY

WARNING

Personal injuries may occur if personal protective equipment are not used when removing two piece lubrication ring (644.01) from the shaft.

1 Fasten the bearing unit firmly to a vice at the bearing housing (330.01). Fig. 5.

2 Detach the coupling half (840.01) using an extractor.

3 Unscrew the hexagonal screws (901.09) with which the guard end is fixed on the bearing carrier (382.01). Remove the guard end (685.01).

4 Loosen the hexagonal screws (901.05) which tighten the bearing carrier. Fig. 6.

5 Rotate bearing carrier counterclockwise until shaft assembly can be taken away from bearing housing (330.01). Fig. 6.

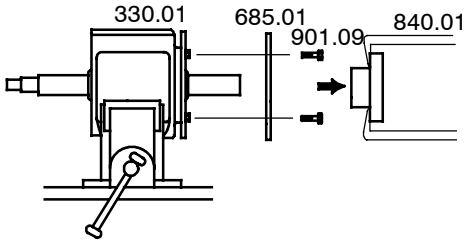

Fig. 5

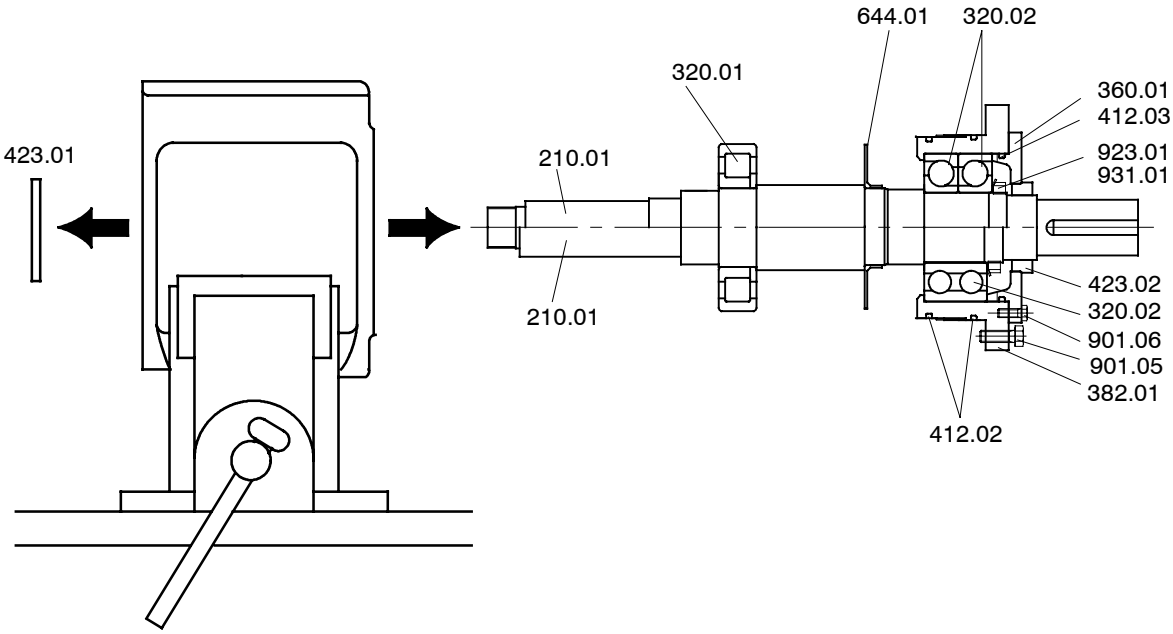

Fig. 6

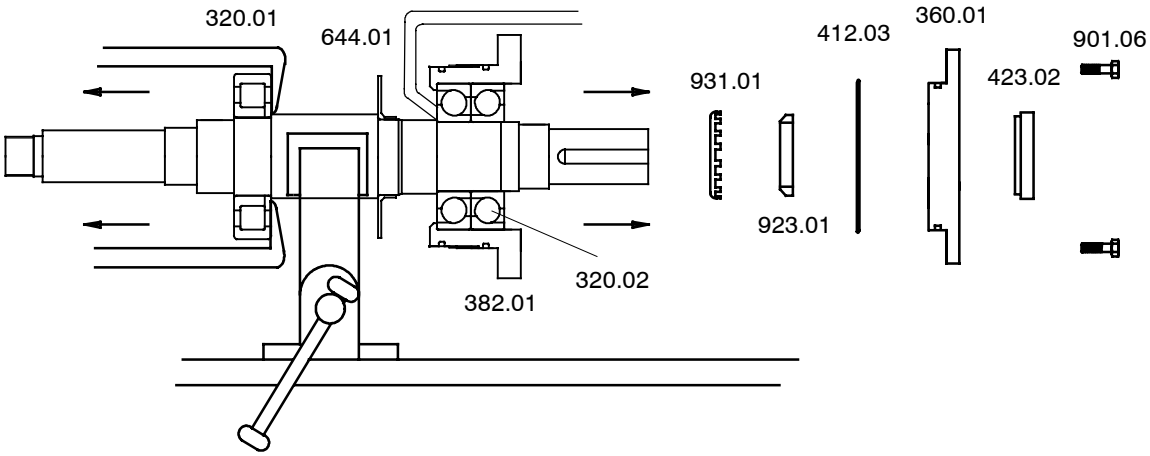

Fig. 7

6 Fasten the shaft with its bearings, bearing carrier and bearing cover to a vice from the center of shaft. Fig. 7. Use soft sheets between the vice clamp jaws to avoid damaging of shaft.

7 Remove radial bearing (320.01) from the shaft with an extractor.

8 Unscrew the hexagonal screws (901.06). Draw the bearing cover (360.01) out by using the hexagonal screws (901.06). As a result the labyrinth ring (423.02) can also be removed. Fig. 7.

9 Remove the bearing nut (923.01) and lockwasher (931.01).

10 Remove thrust bearings (320.02) and bearing carrier (382.01) from the shaft with an extractor. Fig. 7.

11 Slide bearing carrier (382.01) over the thrust bearings.

4 Reassembly

4.1 Preliminaries

- Clean all gasket surfaces and fittings from rust and layers.
- Inspect for unusual erosion, pitting and wear in parts.
- Inspect keyways and bores for damage.
- Inspect the pump and baseplate for cuts and cracks.

4.2 Reassembly of bearing unit

N O T E
It is absolutely necessary to place the bearings correctly according to the O-system (so called Back-To-Back Design).

COPYRIGHT © SULZER PUMPS FINLAND OY

COPYRIGHT © SULZER PUMPS FINLAND OY

WARNING

Personal injuries may occur if personal protective equipment are not used when installing two piece lubrication ring (644.01) on the shaft.

1 Check the shaft (210.01) with its shaft wearing sleeve (524.01) in a span. Their maximum radial difference is (0.002 in) 0.05 mm.

2 Fasten the shaft to a vice with the impeller end of the shaft upwards. Use soft sheets between the vice clamp jaws to avoid shaft damages. Heat the cylinder roller bearing (320.01) to ca (+212 °F) +100 °C and push it onto the shaft. Remember to place the spacer ring of the bearing on the shaft shoulder side. Fig. 9.

3 Let the bearing cool down. Then tap it tightly by the inner ring against the shoulder using a pipe punch. Rotate the pipe punch between the blows.

4 Turn the shaft so that the coupling side is upwards, fasten it to a vice. Install two piece lubrication ring (644.01) to its groove to the shaft (oil lubricated bearing unit) and bearing carrier (382.01) with its o-rings (412.02) in the grooves on the shaft.

5 Heat the two angular contact ball bearings (320.02) to approx. (+212 °F) +100 °C and push them onto the shaft. Let the bearings cool down.

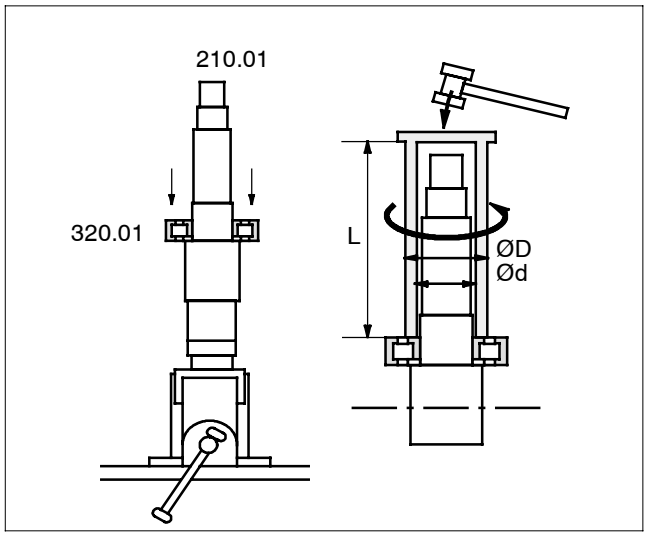

Bearing unit	Ød		ØD		L_{min}	
	(in)	(mm)	(in)	(mm)	(in)	(mm)
1	1.45	37	2.00	50	8.0	203
2	2.25	57	2.80	71	9.0	229
3	3.45	87	4.60	117	12.0	305

Fig. 9

COPYRIGHT © SULZER PUMPS FINLAND OY

COPYRIGHT © SULZER PUMPS FINLAND OY

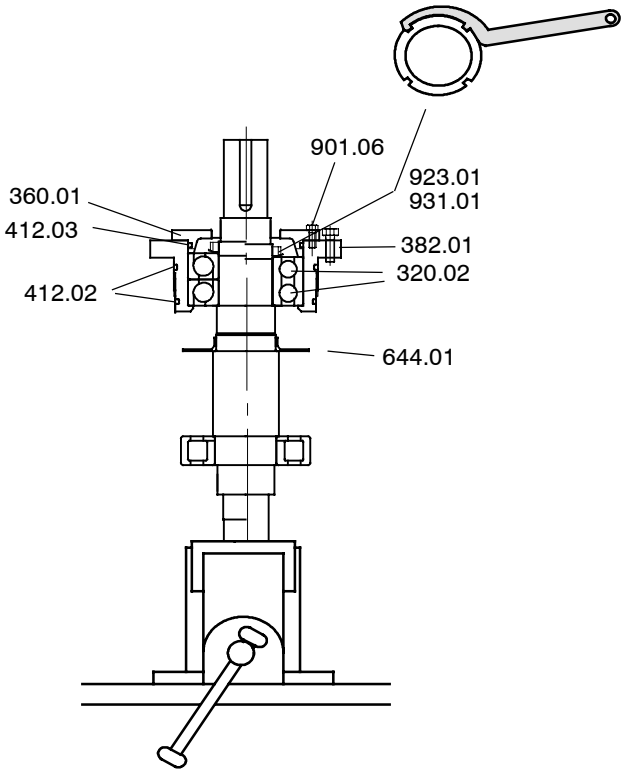

Fig. 10

6 Place the lockwasher (931.01) on the shaft.

7 Tighten the angular contact ball bearings by means of the bearing nut (923.01) tightly against the shaft shoulder, use a suitable hooked wrench.

8 Bend the lockwasher tooth into the bearing nut slots.

9 Set the o-ring (412.03) into the groove in the bearing cover (360.01). Grease the o-ring slightly.

10 Raise bearing carrier (382.01) on the thrust bearings (320.02) and fix bearing cover cautiously into its place by tightening fixing screws (901.06). Fig. 10.

COPYRIGHT © SULZER PUMPS FINLAND OY

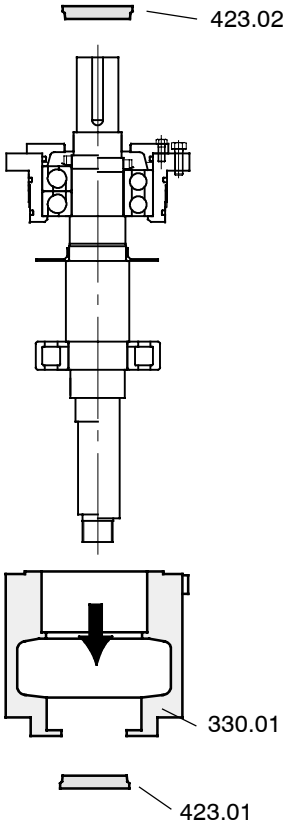

Fig. 11

11 Tighten the bearing housing (330.01) vertically to the vice with the coupling side upwards. Fig. 11.

12 Grease the o-rings (412.02) slightly and lower the shaft assembly carefully into the bearing housing.

13 Rotate from the bearing carrier to clockwise to set the shaft assembly into the bearing housing. Fig. 12. See also Fig. 6 in section Preventive maintenance.

14 Tap the labyrinth rings (423.01 and 423.02) into the bearing housing (330.01) and bearing cover (360.01) with a soft hammer.

COPYRIGHT © SULZER PUMPS FINLAND OY

COPYRIGHT © SULZER PUMPS FINLAND OY

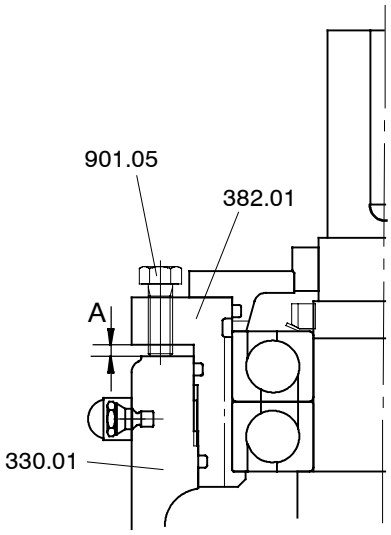

A = Pre-setting distance for shaft assembly.

Bearing unit	A $^{0}_{-0.04}$ (in)	A $^{0}_{-1}$ (mm)
1	0.14	3.5
2	0.18	4.5
3	0.24	6

Fig. 12

15 Lock the shaft axially to bearing housing with screws (901.05).

4.3 Assembly of shaft seal

Refer to the sectional drawing of the shaft seal when reading through these instructions.

Gland packing, fittings PL01, PL02, PL03 and PL04

1 Fix the adapter (344.01) to the bearing housing (330.01) with the hexagonal screws (901.03).

2 Place the casing cover (161.01) on a horizontal surface with the sealing cavity upwards.

3 Place the neck bush (456.01) to the bottom of the sealing cavity.

4 Put the shaft wearing sleeve (524.01) in an upright position to the middle of the sealing cavity.

5 Insert the first two gland packings (461.01), the lantern ring (458.01), the other two gland packings and the two-piece stuffing box gland (452.01). Tighten the hexagonal nuts (920.02) by hand.

6 Push the casing cover with gland packing parts onto the shaft. Check that the shaft wearing sleeve is placed towards the shaft shoulder.

7 Attach the casing cover to the adapter with hexagonal screws (901.02).

Mechanical seal, fittings ME01, ME02, ME03 and ME06, v-ring

1 Fix the adapter (344.01) into the bearing housing (330.01) with hexagonal screws (901.03).

COPYRIGHT © SULZER PUMPS FINLAND OY

2 Mount the mechanical seal (433.01) parts into the cover plate for seal (471.01) and onto the shaft wearing sleeve (524.01) according to assembly distance A from table 11 and the seal manufacturer's instructions.

Table 11

Assembly distance A in (mm)				
Bearing unit	John Crane T1	John Crane T8-1T	AES P04T	Flowserve RO
1	0.53 (13.4)	1.22 (30.9)	1.08 (27.4)	0.63 (16.3)
2	0.54 (13.6)	1.60 (40.6)	1.20 (30.6)	1.22 (31.0)
3	0.63 (16.0)	2.00 (50.9)	1.18 (29.9)	1.52 (38.7)

3 Place the gasket (400.02) in the cover plate for seal (471.01). Fix the cover plate for seal on the casing cover (161.01). Tighten the hexagonal nuts (920.02).

4 Push the casing cover (161.01) together with the incorporated parts onto the shaft. Fix the screws (901.02).

5 Push the shaft wearing sleeve (524.01) together with the incorporated parts onto the shaft against the shoulder.

Mechanical seal, fitting ME04, v-ring

1 Fix the adapter (344.01) into the bearing housing (330.01) with hexagonal screws (901.03).

2 Mount the mechanical seal (433.01) parts into the cover plate for the seal (471.01) and onto the shaft wearing sleeve (524.01) according to assembly distance A from table 11 and the seal manufacturer's instructions. Make sure that the cylinder pin (562.02) is in the proper position.

3 Place the gasket (400.02) in the cover plate for seal (471.01). Fix the cover plate for seal on the casing cover (161.01). Tighten the hexagonal nuts (920.02).

4 Push the plate (550.01) onto the shaft. Make sure that the rubber lip on the outer edge of the plate comes to the bearing side. Fig. 13.

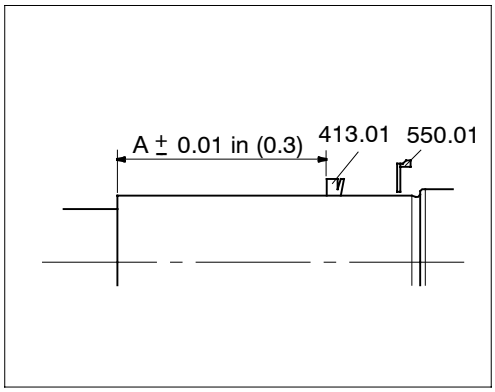

Fig. 13

5 Push the v-ring (413.01) onto the shaft. The distance of the v-ring from the shaft shoulder is shown in Table 12. The use of an installation sleeve helps to get the v-ring perpendicularly with respect to the shaft. Grease the lip of the v-ring slightly.

Table 12 ***V-ring position, fitting ME04***

Bearing unit	Seal size ∅		Distance A	
	mm	in	mm	in
1	35	1.375	90.6	3.57
2	54	2.125	113.2	4.46
3	64	2.500	121.7	4.80

6 Push the casing cover (161.01) together with the incorporated parts onto the shaft. Fix the screws (901.02).

7 Push the shaft wearing sleeve (524.01) together with the incorporated parts onto the shaft against the shoulder.

8 Continue installation according to item ”Installation of impeller”.

9 After all other parts have been installed, push the plate (550.01) into the groove in the cover plate for seal (471.01) so that the entire rubber lip settles straight in the groove. Fig. 14. To make sure that the lip is correctly situated, use a tool shown in Fig. 15. Place the tip of the tool into the groove and turn around the cover plate for seal.

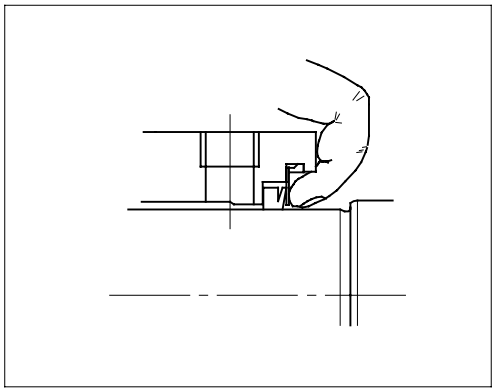

Fig. 14

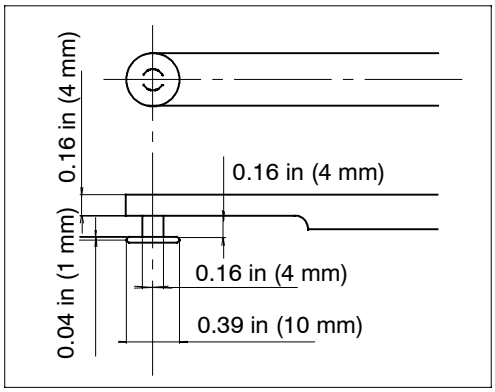

Fig. 15

Mechanical seal, fittings ME01, ME02, ME03, ME04 and ME06, throttling bush

1 Fix the adapter (344.01) into the bearing housing (330.01) with hexagonal screws (901.03).

2 Heat the cover plate for seal (471.01) to approx. +212 °F (100 °C) and push the throttling bush into the cover plate for seal.

COPYRIGHT © SULZER PUMPS FINLAND OY

3 Mount the mechanical seal (433.01) parts into the cover plate for seal (471.01) and onto the shaft wearing sleeve (524.01) according to assembly distance A from table 13 and the seal manufacturer's instructions.

Table 13

Assembly distance A in (mm)				
Bearing unit	John Crane T1	John Crane T8-1T	AES P04T	Flowserve RO
1	0.53 (13.4)	1.22 (30.9)	1.08 (27.4)	0.64 (16.3)
2	0.54 (13.6)	1.60 (40.6)	1.20 (30.6)	1.22 (31.0)
3	0.63 (16.0)	2.00 (50.9)	1.18 (29.9)	1.52 (38.7)

4 Place the gasket (400.02) in the cover plate for seal (471.01). Fix the cover plate for seal on the casing cover (161.01). Tighten the hexagonal nuts (920.02).

5 Push the casing cover (161.01) together with the incorporated parts onto the shaft. Fix the screws (901.02).

6 Push the shaft wearing sleeve (524.01) together with the incorporated parts onto the shaft against the shoulder.

Mechanical seal, fittings MC01, MC02, MC03, MC04, MC06, MC20, MC21 and MC22

1 Fix the adapter (344.01) into the bearing housing (330.01) with hexagonal screws (901.03).

2 Mount the mechanical seal (433.01) into the casing cover (161.01). Follow the instructions provided by the seal manufacturer. Tighten the hexagonal nuts (920.02).

3 Push the shaft wearing sleeve (524.01) onto the shaft.

4 Push the casing cover (161.01) together with the incorporated parts onto the shaft. Follow the instructions provided by the seal manufacturer. Fix the screws (901.02).

5 Complete all the lockings, fixings and other seal-related jobs as described in the seal manufacturer's instructions.

Mechanical seal, fittings MR01, MR02, MR03 and MR06

1 Fix the adapter (344.01) into the bearing housing (330.01) with hexagonal screws (901.03).

2 Mount the static part of the mechanical seal (433.01) into the casing cover (161.01) with the flange (723.01) if included in the parts list and the outer rotating part onto the shaft according to the seal manufacturer's instructions. Tighten the nuts (920.02).

3 Push the casing cover (161.01) together with the incorporated parts onto the shaft. Fix the screws (901.02).

4 Push the rotating part of the mechanical seal onto the shaft against the shoulder.

Mechanical seal, fittings MR04

1 Fix the adapter (344.01) into the bearing housing (330.01) with hexagonal screws (901.03).

2 Mount the static part of the mechanical seal (433.01) into the casing cover (161.01) with the flange (723.01) if included in the parts list. Follow the instructions provided by the seal manufacturer. Tighten the nuts (920.02).

COPYRIGHT © SULZER PUMPS FINLAND OY

3 Push the plate (550.01) onto the shaft. Make sure that the rubber lip on the outer edge of the plate comes to the bearing side. Fig. 16.

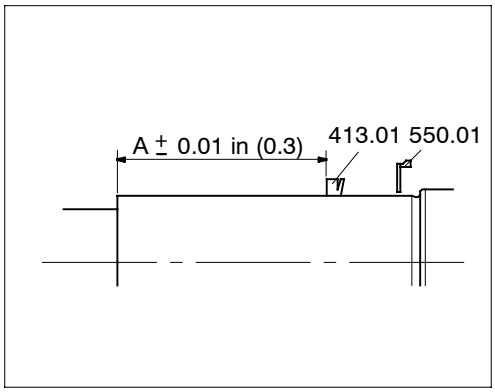

Fig. 16

4 Push the v-ring (413.01) onto the shaft. The distance of the v-ring from the shaft shoulder is shown in Table 14. The use of an installation sleeve helps to get the v-ring perpendicularly with respect to the shaft. Grease the lip of the v-ring slightly.

Table 14 V-ring position, fitting MR04

Bearing unit	Seal size ∅		Distance A	
	in	mm	in	mm
1	1.125	29	3.252	83
2	1.875	48	3.880	99
3	2.250	57	4.425	112

5 Push the casing cover (161.01) together with the incorporated parts onto the shaft. Fix the screws (901.02).

6 Push the rotating part of the mechanical seal (433.01) onto the shaft against the shoulder.

7 Continue installation according to item ”Installation of impeller”.

8 After all other parts have been installed, push the plate (550.01) into the groove in the cover plate for seal (471.01) so that the entire rubber lip settles straight in the groove. Fig. 17. To make sure that the lip is correctly situated, use a tool shown in Fig. 18. Place the tip of the tool into the groove and turn around the cover plate for seal.

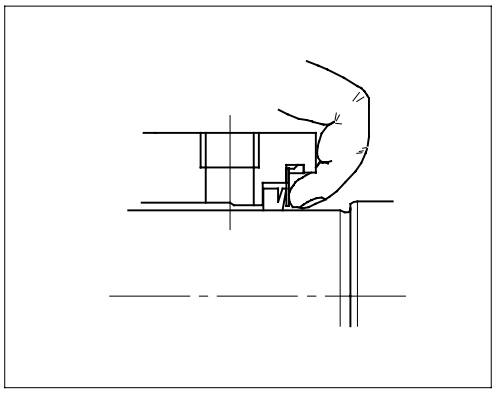

Fig. 17

COPYRIGHT © SULZER PUMPS FINLAND OY

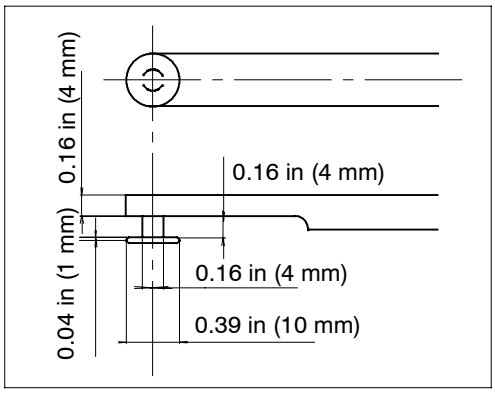

Fig. 18

Mechanical seal, fittings MR20, MR21 and MR22

1 Fix the adapter (344.01) into the bearing housing (330.01) with hexagonal screws (901.03).

2 Mount the static part of the mechanical seal (433.01) into the casing cover (161.01), and the outer rotating part onto the shaft according to the seal manufacturer's instructions. Tighten the nuts (920.02).

3 Push the casing cover (161.01) together with the incorporated parts onto the shaft. Fix the screws (901.02).

4 Push the rotating part of the mechanical seal (433.01) onto the shaft against the shoulder.

Dynamic seal, fittings DS01, DS02 and DS03

1 Fix the adapter (344.01) to the bearing housing (330.01) with the hexagonal screws (901.03).

2 Slide the thrust ring (475.01) with its o-ring (412.05) and grub screws (904.01) along the shaft to a preliminary position up to the hindmost shoulder.

3 Install the o-ring (412.06), static seal (435.01) and cover plate for seal (471.02) into the stuffing box housing (451.01). Tighten the hexagonal screws (901.08). Observe that the static seal must be placed in the right way and centrally in its guiding slot in the stuffing box housing.

4 Put the o-ring (412.04) in its slot in the stuffing box housing.

5 Put the stuffing box cover (161.02) on the table with the expeller side up. Put the expeller (604.01) inside the cover with the vane-side up. Push the stuffing box housing together with its parts on the stuffing box cover in the dedicated runway. In size 32, fix the hexagonal screws (901.07). The position of the stuffing box housing versus the holes of the stuffing box cover screws (901.02) should be such that in a ready assembled pump, the plug (903.09) in the stuffing box housing points horizontally to the left when viewed from the coupling. Check the position of the holes from the adapter.

6 Push the pack of parts (assembled in the stuffing box cover during stage 5) onto the shaft so that the expeller fits in its runway on the shaft and the stuffing box cover in its runaway on the adapter. Fix the hexagonal screws (901.02).

7 Continue the assembly according to the following section "Installation of impeller".

8 When the exchange unit is fully assembled, place the thrust ring (475.01) at the right position on the shaft and fasten the grub screws (904.01). The measure between the face of the cover plate for seal and the shoulder of the thrust ring must be 0.197 in (5 mm). Fig. 19.

COPYRIGHT © SULZER PUMPS FINLAND OY

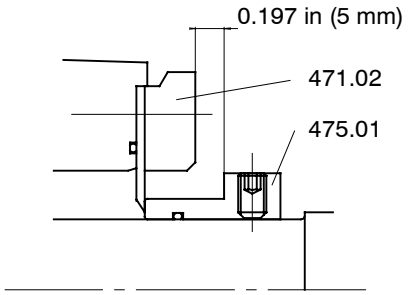

Fig. 19

4.4 Installation of impeller

1 Fit the o-ring (412.01) into its place behind the impeller (230.01). Fig. 20.

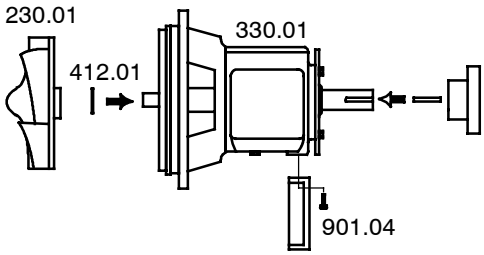

Fig. 20

2 Prevent the shaft from rotating from the coupling end and insert the impeller (230.01) into its place. The clearance between the impeller and casing cover (161.01) is about 0.014 ... 0.015 in (0.35 ... 0.4 mm).

4.5 Installation of exchange unit

1 Fix the support foot of the bearing unit by means of the hexagonal screws (901.04). Fig 21.

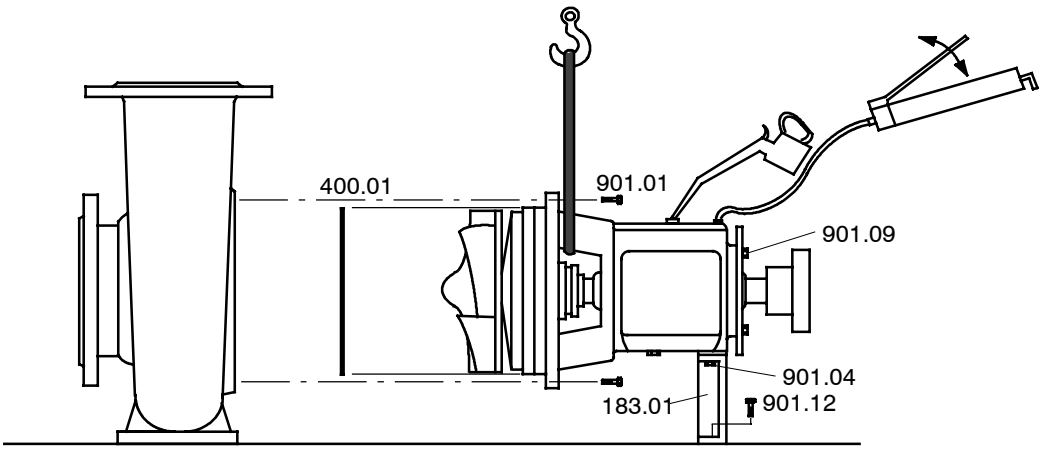

Fig. 21

2 Heat the coupling flange to approx. (+212 °F) +100 °C and push it on the shaft with the front surface at the shaft end level.

COPYRIGHT © SULZER PUMPS FINLAND OY

3 Suspend the exchange unit with a hoist at the maintenance opening of the adapter or underneath the adapter.

4 Fit the gasket (400.01) into the casing cover (161.01).

5 Install the exchange unit into its place, lubricate the hexagonal screws (901.01) with Molykote Ti 1200 lubricant and tighten them in a cross bolt pattern, to torque values given in Table 15.

Table 15 Exchange unit fastening screws (901.01)

Screw size	Moment			
	Rating		Max. value	
	(lb ft)	(Nm)	(lb ft)	(Nm)
1/2 - 13 UNC	35	50	45	60
5/8 - 11 UNC	95	130	120	160
3/4 - 10 UNC	185	250	220	300

6 Check the impeller clearances according to the Section ”Preventive maintenance”.

7 Place adjusting plates under the support foot. The plates must have the same thickness as the gap under the support foot. Do not close the gap by tightening.

8 Fix the support foot (183.01) to the baseplate (890.01) with the hexagonal screws (901.12).

9 Lubricate the bearing unit with oil or grease according to lubricating instructions in Section ”Operation”.

10 Install the coupling spacer according to the coupling manufacturer’s instructions.

11 Fix the coupling guard jackets (686.01) and (686.02). The coupling guard must be adjusted so that the space ”s” between the coupling guard and motor is approx. (0.2 in) 5 mm. Fig. 22.

12 Install the auxiliary pipings (700.01) and accessories according to sectional drawings and the seal manufacturer’s instructions.

13 Fix the adapter guard (683.01).

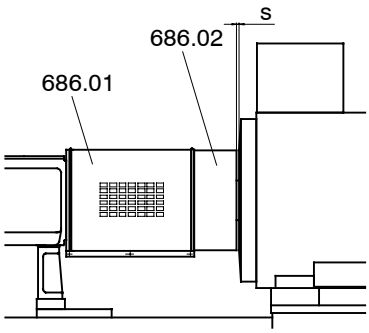

Fig. 22

WARNING

Proper adjustment of the coupling guard jacket is a relevant safety factor.

SULZER

Spare parts recommendation

Version 02 > / 20080601 / Replaces 20051101 / en / **N15069**

Contents *Page*

1 Recommended spare parts 1

COPYRIGHT © SULZER PUMPS FINLAND OY

COPYRIGHT © SULZER PUMPS FINLAND OY

1 Recommended spare parts

To avoid long and expensive shut-down periods, the following spare parts are recommended to be kept in stock. The number of spare parts is evaluated for two year's use in normal operating conditions, Table 1.

When ordering spare parts, contact your local Sulzer Pumps representative (contact data found in Section "Information for use").

Table 1 Recommended spare parts

Part No.	Description	Number of identical parts in pumps							
		1	2	3	4	5	6 7	8 9	≥10
		Number of recommended spare parts							
102.01	Volute casing							1	10 %
161	Casing cover							1	10 %
183.01	Support foot							1	10 %
210.01	Shaft	1	1	1	2	2	2	3	30 %
230.01	Impeller	1	1	1	1	2	2	3	30 %
320.01	Antifriction bearing	1	1	1	2	2	3	4	50 %
320.02	Antifriction bearing		2		4		6	8	50 %
330.01	Bearing housing							1	10 %
339.01	Bearing unit							1	10 %
344.01	Adapter							1	10 %
360.01	Bearing cover							1	10 %
382.01	Bearing carrier							1	10 %
400	Gaskets	2	4	6	8	8	9	12	150 %
412	O-rings	2	4	6	8	8	9	10	100 %
413.01	V-ring	2	4	6	8	8	9	10	100 %
423	Labyrinth ring							1	10 %
433.01	Mechanical seal	1	2	3	4	5	6	7	90 %
435.01	Static seal	1	2	3	4	5	6	7	90 %
451.01	Stuffing box housing							1	10 %
452.01	Stuffing box gland							1	10 %
456.01	Neck bush							1	10 %
458.01	Latern ring							1	10 %
461.01	Gland packing				24			32	400 %
471	Cover plate for seal							1	10 %
475.01	Thrust ring	1	2	3	4	5	6	7	90 %
524.01	Shaft wearing sleeve	1	2	2	2	3	3	4	50 %
542	Throttling bush							1	10 %
550.01	Plate	2	4	6	8	8	9	10	100 %
604.01	Expeller	1	1	1	1	2	2	3	30 %
923.01	Bearing nut	1	1	1	2	2	2	3	30 %
931.01	Lockwasher	1	1	1	2	2	2	3	30 %
940.01	Key	1	1	1	2	2	2	3	30 %
Refer to the parts lists of the pumps when estimating the amount of needed spare parts.									

COPYRIGHT © SULZER PUMPS FINLAND OY

Control Panel

Power Input:
230V
60 Hz
3 Phase

Process Motor Size - 5hp

Electrical - 230VAC/60Hz /3 Phase

Input BTU Rating - 1,800,000 BTU/Hour

Process Inlet Flow Rate - 500-1000 SCFM

Catalyst Volume (If Equiped) - 1.47 Cubic Feet

Stack Outer Diameter - 25.81 Inches

Stack Inner Diameter - 25.66 Inches

Discharge Height - 13.7 Feet

Site Elevation - Not Specified

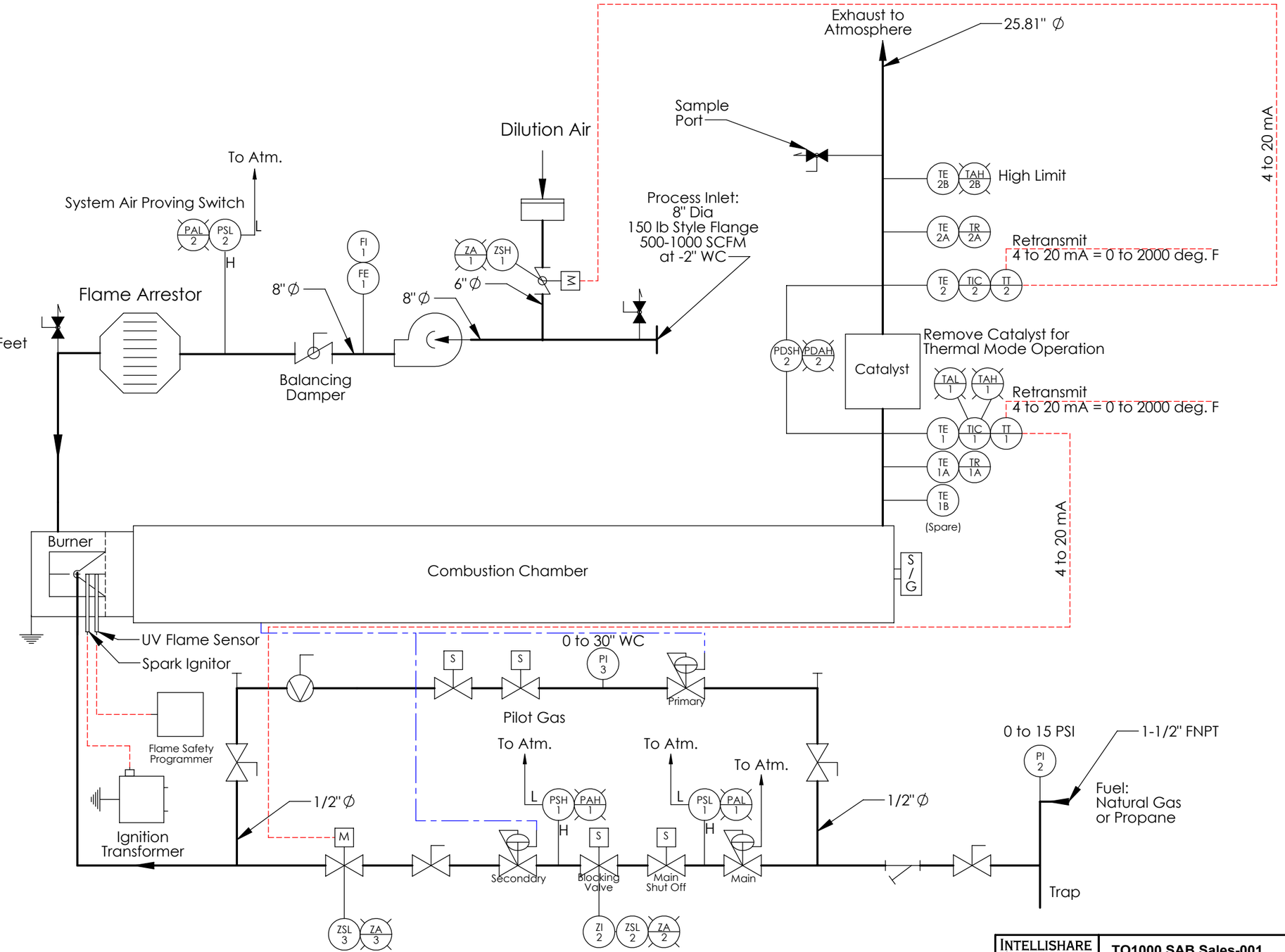

Information contained herein is the exclusive property of Intellishare Environmental, Inc. and is provided for information purposes only. Disclosure, copying, distribution or sharing with others is strictly prohibited unless authorized in writing by Intellishare Environmental, Inc.

INTELLISHARE ENVIRONMENTAL
CLEAN AIR SOLUTIONS

TO1000 SAB Sales-001

TITLE	1000 CFM Thermal/Catalytic Oxidizer Process & Instrumentation Diagram
DRAWING NO.	TO1000 SAB Sales-001
SCALE	NTS
DRAWN	Henry A — DATE 5/16/2006
CHECKED	DATE
APPROVED	DATE
LAST DRAWN BY	Henry A — DATE 1/8/2010
CUSTOMER	Intellishare Environmental, Inc. Sales
SOURCE	
REV.	A
PAGE	1 OF 2
LAST PLOTTED BY	XXX — DATE XXX

Measured Variable		Succeding Letters		Valve Bodies		Miscellaneous		Operators	
A	Analysis	A	Alarm		Valve (N.O. or Unspecified)		Centrifugal Blower	M	Electric Motor
F	Flow Rate	C	Controller		Valve Normally Closed			S	Solenoid
I	Current	D	Differential		Ball Valve		Flow Orifice		Manual
L	Level	E	Primary Element		Check Valve			S / G	Sight Glass
P	Pressure	H	High		Butterfly Valve		Electrical Line		
T	Temperature	I	Indicator		Damper		Pneumatic Line		Vortex Damper
M	Motor	L	Light		Orifice Valve		Process Ductwork		
Z	Position	L	Low				Panel Mounted Instrument		
		R	Record		Pressure Regulator (Self Contained)		Locally Mounted Instrument		Filter Element
		S	Switch				Mounted Inside Panel		
		T	Transmitter		Pressure Regulator (External Backload)		Alarm		
		V	Valve				Transition		
				T	1/2" FNPT Sample Port				
					1/4" Barbed Sample Port with Hand Valve		Ground Connection		
							Flanged Connection		

Information contained herein is the exclusive property of Intellishare Environmental, Inc. and is provided for information purposes only. Disclosure, copying, distribution or sharing with others is strictly prohibited unless authorized in writing by Intellishare Environmental, Inc.

INTELLISHARE ENVIRONMENTAL

CLEAN AIR SOLUTIONS

TO1000 SAB Sales-001

TITLE: 1000 CFM Thermal/Catalytic Oxidizer Process & Instrumentation Diagram

DRAWING NO.: TO1000 SAB Sales-001

SCALE: NTS

REV.: A

DRAWN: Henry A DATE: 5/16/2006

CHECKED DATE

APPROVED DATE

LAST DRAWN BY: Henry A DATE: 1/8/2010

CUSTOMER: Intellishare Environmental, Inc.

Sales

SOURCE

PAGE 2 OF 2

LAST PLOTTED BY: XXX DATE: XXX

FILE PATH

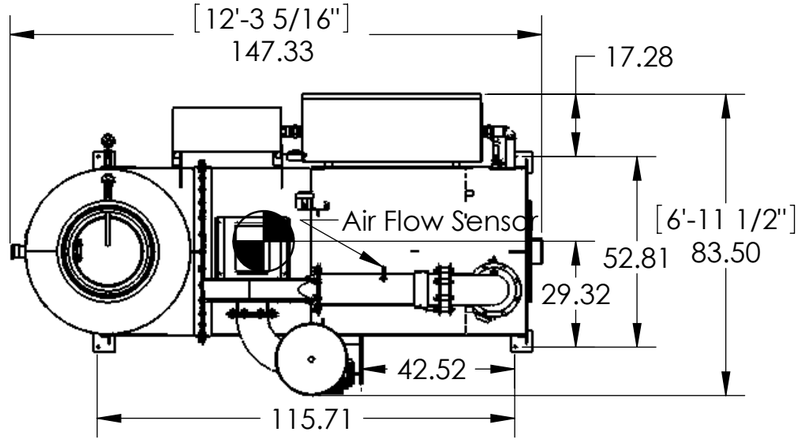

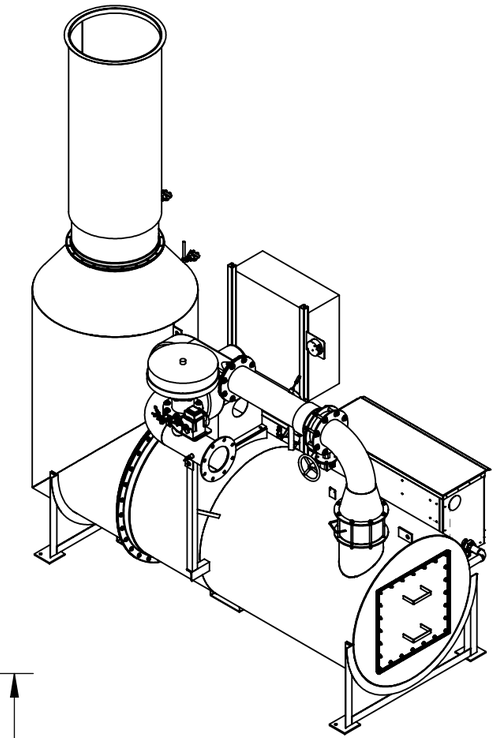

= Center of Gravity

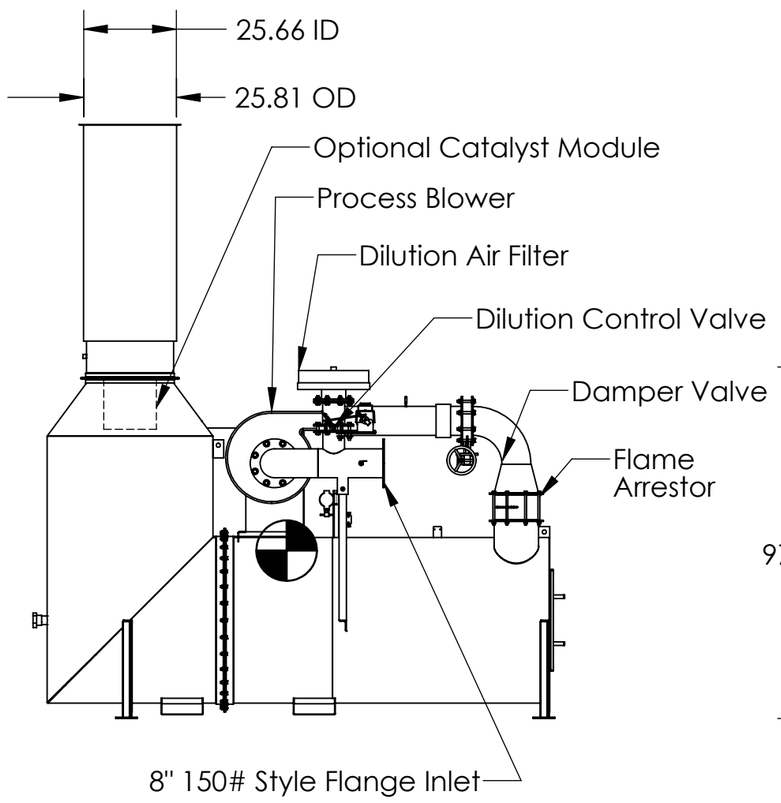

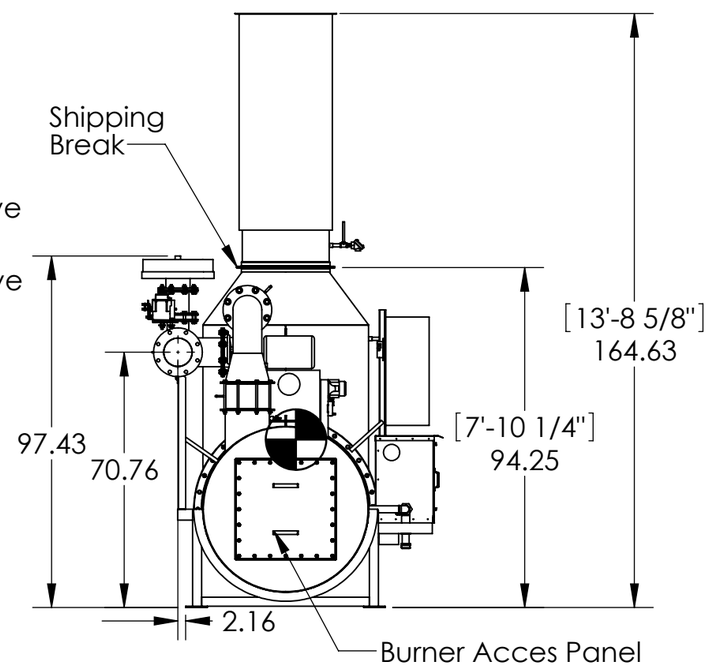

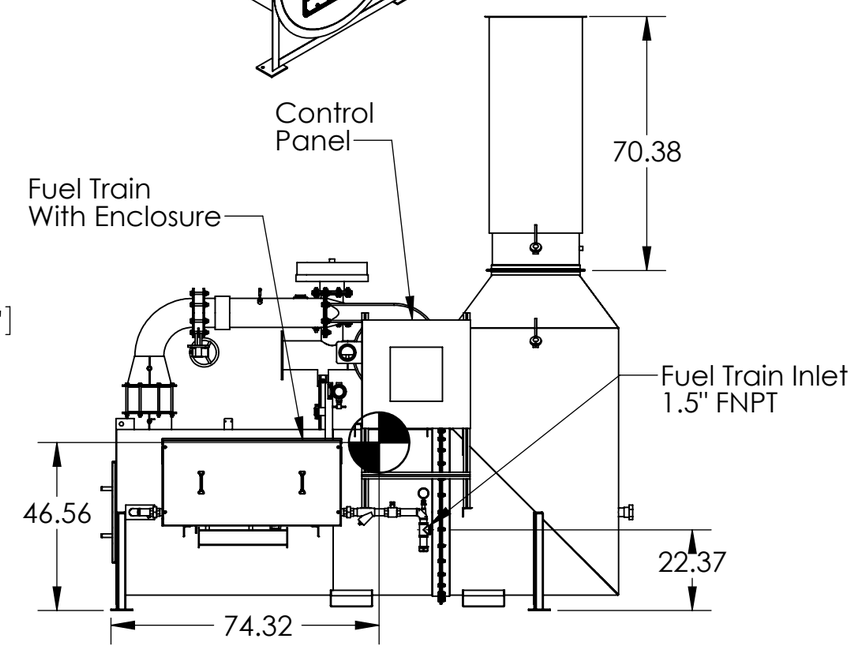

Estimated unit weight: 4500 lbs.

Note: Unit must be anchored to meet Uniform Building Code requirements

Dimensions given in inches unless otherwise stated.

Information contained herein is the exclusive property of Intellishare Environmental, Inc. and is provided for information purposes only. Disclosure, copying, distribution or sharing with others is strictly prohibited unless authorized in writing by Intellishare Environmental, Inc.

INTELLISHARE ENVIRONMENTAL
CLEAN AIR SOLUTIONS

TO1000 SAB Sales

TITLE: 1000 CFM THERMAL/CATALYTIC OXIDIZER SALES DRAWING

DRAWING NO.: TO1000 SAB Sales

SCALE: NTS

REV.: A

DRAWN: Henry A DATE: 8/2/2006

CHECKED: DATE:

APPROVED: DATE:

LAST DRAWN BY: Henry A DATE: 6/1/2009

Contact:
Intellishare Environmental, Inc.
E4803 395th Ave., - Menomonie, WI 54751 www.intellishare-env.com
Pnoe: 715-233-6115 FAX: 715-232-0669

SOURCE:

PAGE 1 OF 1

LAST PLOTTED BY: XXX DATE: XXX

FILE DATA

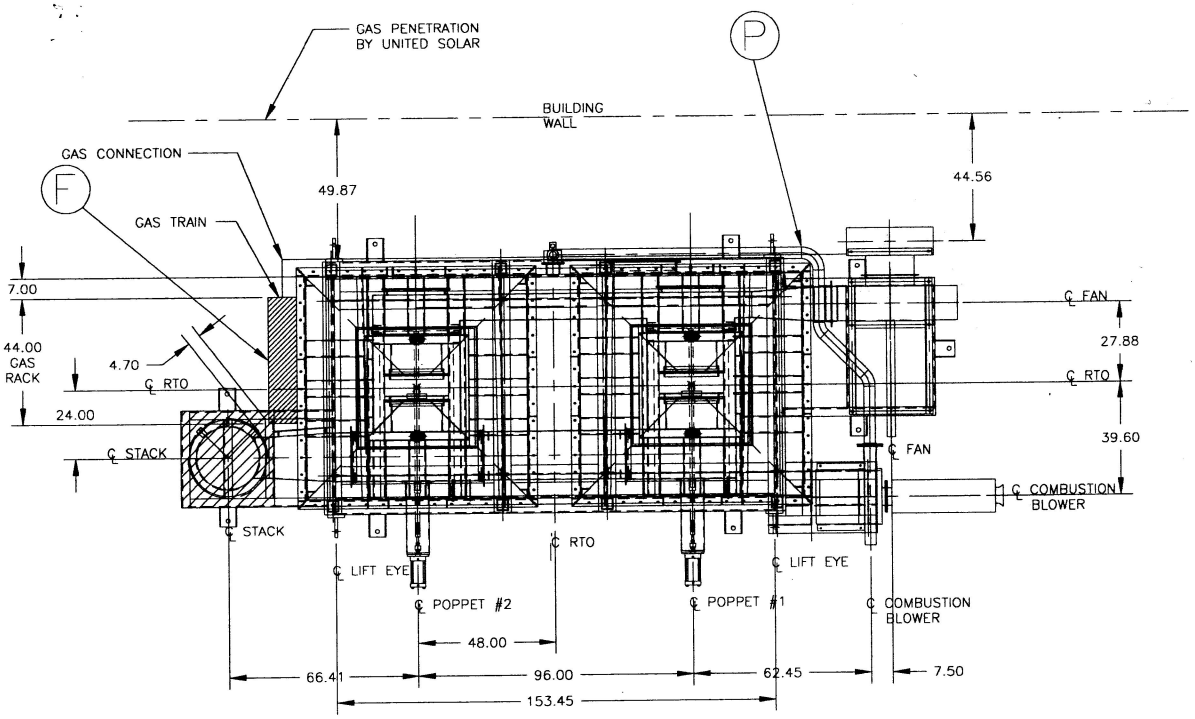

PLAN VIEW

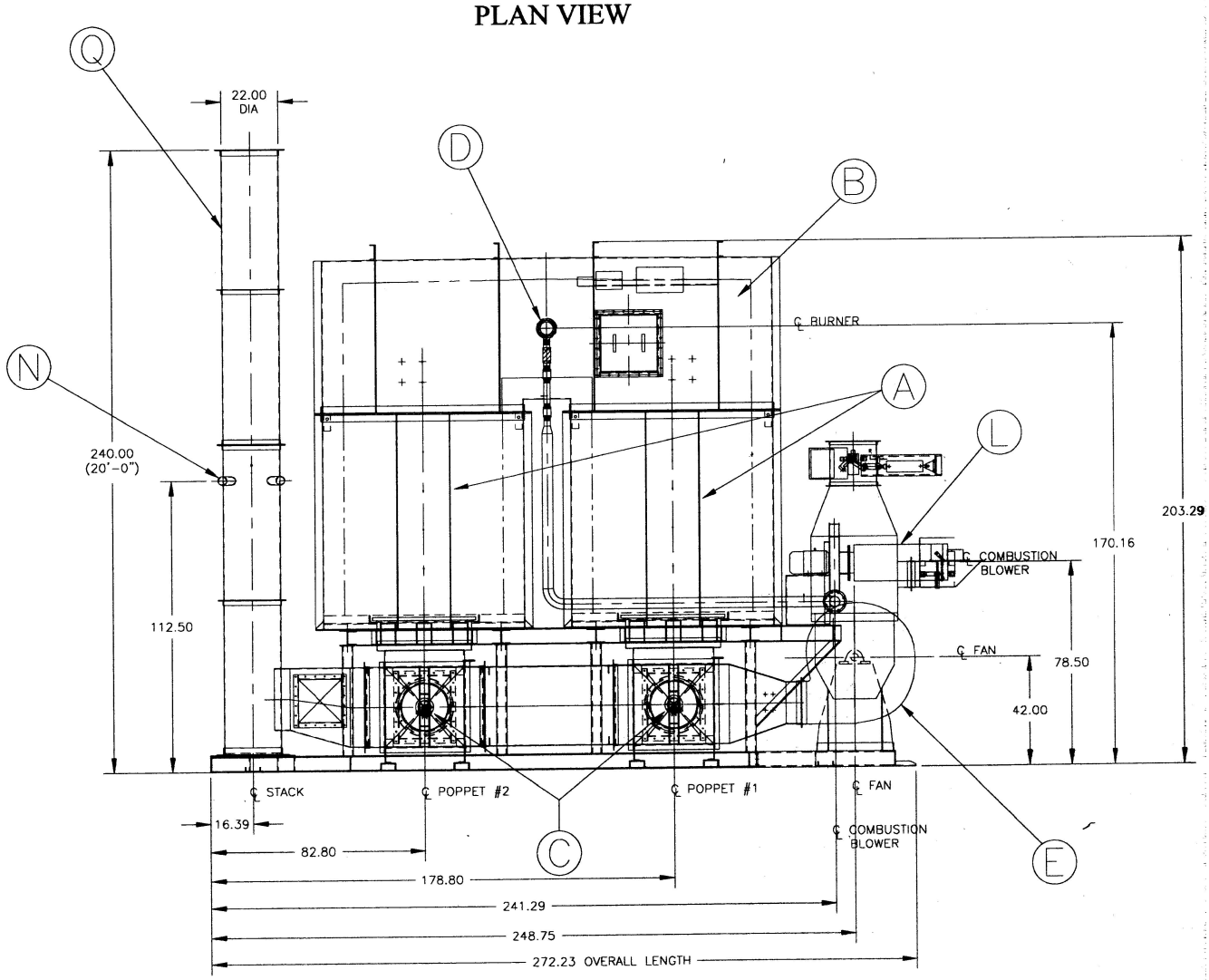

FRONT ELEVATION

SUPPLIED BY TANN CORPORATION:

A. (2) ENERGY RECOVERY CHAMBERS.
B. (1) BURNER CHAMBER.
C. (2) TWO CYCLE POPPET VALVE.
D. (1) RTO BURNER
E. (1) OXIDIZER FAN
F. (1) RTO GAS TRAIN.
G. (1) FRESH AIR INTAKE/PURGE DAMPER (NOT SHOWN)
H. (1) BLOCKING DAMPER (NOT SHOWN)
J. (1) COMPRESSED AIR RESERVOIR. (NOT SHOWN)
K. (1) ELECTRICAL CONTROL PANEL (NOT SHOWN)
L. (1) COMBUSTION BLOWER
N. TEST PORTS
P. COMBUSTION BLOWER PIPING.
Q. STACK (22ø, 20' TALL)

WEIGHTS: (ESTIMATES)

ASSEMBLED UNIT – 40,000 LBS
BASE UNIT – 20,000 LBS
CROSSOVER – 6,000 LBS

OXIDIZER UTILITY REQUIREMENTS:

GAS:
TYPE – NATURAL
MAXIMUM FLOW – 600 SCFH RTO
INLET PRESSURE : 5 PSIG AT GAS TRAIN
RTO GAS SUPPLY CONNECTION – 1.00" NPT

ELECTRICAL: (SEE ELEC. PRINTS FOR COMPLETE DETAILS)
VOLTS – 460, HERTZ – 60, PHASE – 3

COMPRESSED AIR: 18 CFH
AIR PRESSURE : 80–100 PSIG

SUPPLIED BY CUSTOMER:

1. ANY PERMITS TO OPERATE, CONSTRUCT OR INSTALL.
2. SUPPLY ELECTRICAL POWER TO RTO CONTROL CABINET & VFD, NATURAL GAS AND COMPRESSED AIR TO OXIDIZER. PER UTILITY REQUIREMENTS LISTED.
3. ALL ROOF PENETRATIONS, ROOF JACKS AND FLASHINGS.
4. MODIFICATIONS TO EXISTING BUILDING, EQUIPMENT, BUILDING STRUCTURES, AND OBSTRUCTIONS AT INSTALLATION SITE.
5. ANY COMPLIANCE TESTING.
6. ACCESS TO WORK SITE.
7. DUCTWORK FROM PROCESS TO RTO.

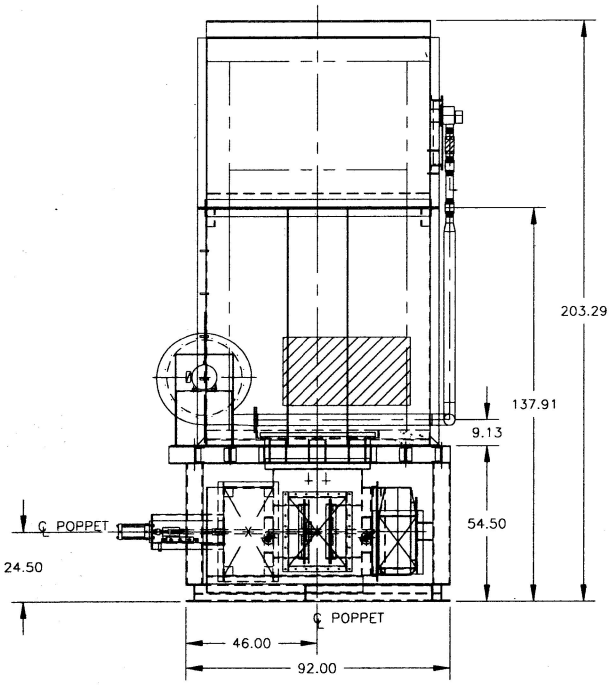

SIDE ELEVATION

ITEM	QTY	PART NO.	DESCRIPTION

This document is confidential proprietary information of L&E America. No disclosure to any third party may be made without approval of L&E America.

DRAWN BY: S. JOHNSON
DATE DRAWN: 3/6/07
CHECKED BY: .
QUOTE NO.: 1139–06 .
REF: 1139–06
DWG. SCALE: .38=12.00

TITLE: GENERAL ARRANGEMENT MODEL 592 RTO

DWG. NO.: 1139–06–100 | SHEET 1 OF 1 | SIZE D | REV C

REV	DESCRIPTION	BY	DATE	CHK
C	ADDED GAS TIE IN LOCATION AND BLOCKING AND FRESH AIR DAMPER	KMS	6.5.07	
B	MIRRORED TANKS PER SHOP	SMJ	5/21/07	
A	ADDED BALLONS	MJS	5-14-07	